

GLASS-TO-METAL SEAL

HERMETIC CONNECTORS

MILITARY QPL AND COMMERCIAL CONNECTORS FOR HARSH ENVIRONMENT AIR-TIGHT-SEAL APPLICATIONS

APRIL 2013

MISSION CRITICAL HIGH PRESSURE

HERMETICS

Resolve gas, moisture, and particle ingress problems with advanced performance glass-sealed hermetic connectors—the world's largest selection and best availability.



Features

- **DSCC qualified Mil-DTL-38999 Series I, II, III and IV hermetics in both pin and socket configurations plus QPL MIL-DTL-24308 QPL D-sub miniatures**
- **MIL-DTL-24308 QPL D-sub miniature hermetics**
- **Available sealing (helium leak rate) from <1X10^{-7} cc/sec to 1X10^{-10}**
- **No material breakdown or aging over time**
- **Matched and compression seal glass-to-metal technologies**
- **Pressure resistance to 32,000+ PSI**
- **Stainless steel, titanium, Kovar® and Inconel® shell material options**

GLASS-SEALED Hermetic CONNECTORS

Glenair®

Glenair, Inc.
1211 Air Way
Glendale, CA
91201-2497
818-247-6000
sales@glenair.com
www.glenair.com

MIL-QPL and Commercial Glass-Sealed Hermetic Connectors

Introduction to Hermetic Connectors

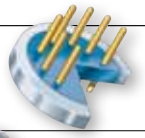

MIL-DTL-38999 QPL and Glenair Commercial Hermetic Connectors



Series 80 Mighty Mouse Hermetic Connectors



MIL-DTL-26482 Series I and II Type Hermetic Connectors



MIL-DTL-83723 Series III Type Hermetic Connectors



MIL-DTL-26500 Type Hermetic Receptacle Connectors



MIL-DTL-5015 Type Hermetic Connectors



Series 22 Geo-Marine® Hermetic Connectors



MIL-DTL-24308 QPL D-Subminiature Hermetic Connectors

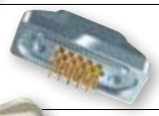

MIL-DTL-83513 Type Micro-D Hermetic Connectors



Series 79 Micro-Crimp Hermetic Connectors



Series 970 PowerTrip™ Hermetic Connectors



Special Hermetic Connectors



Part Number Index

Dimensions are subject to change without notice

© 2013 Glenair, Inc.

U.S. CAGE Code 06324

Printed in U.S.A.

GLENAIR, INC. • 1211 AIR WAY • GLENDALE, CA 91201-2497 • 818-247-6000 • FAX 818-500-9912
www.glenair.com

E-Mail: sales@glenair.com

A

Glenair In-House Hermetic Solutions

Hermetic connectors are designed for use in harsh application environments. Sensitive photographic, sensor and surveillance equipment mounted in the tactical Unmanned Aerial Vehicle for example, must be able to operate in severe weather conditions, at high altitudes, under extremes of atmospheric pressure and in rapidly changing temperature gradients. Hermetic connector devices interconnecting the vacuum sealed black box equipment are selected for their ability to protect the controlled equipment environment by maintaining an air-tight seal between severe flight conditions and aircraft's sensitive payload.

Glenair typically specifies stainless steel, titanium or Kovar® for its hermetic products to provide an effective barrier against gas ingress and corrosion caused by dew point condensation. The hermetic sealing prevents damage to sensitive electronic systems.

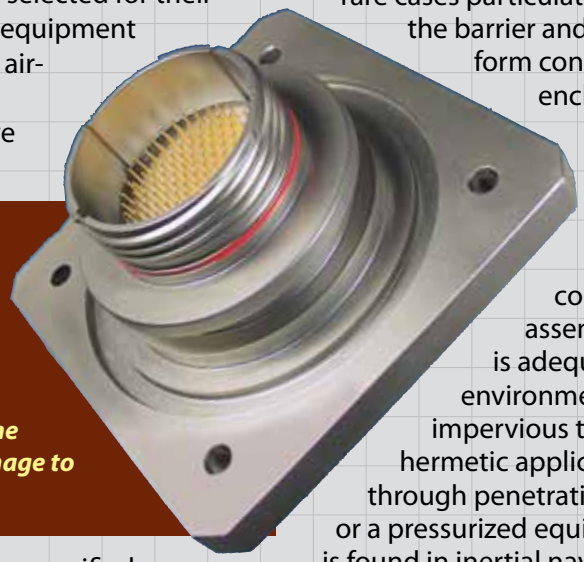

Hermetic connectors are specified for applications as divergent as submarines and orbiting satellites. They are deployed to resist moisture ingress in underground applications and to withstand pressure differentials in vacuum chambers, laboratory equipment and commercial and military aircraft. Hermetic connectors, such as the MIL-DTL-38999 Series I, II, III and IV supplied by Glenair, are principally designed for use in military aerospace—in fact, the requirement for connector hermeticity was originally driven by military electronic applications. But the products are equally at home in commercial applications such as oil-patch logging equipment or medical devices.

Hermeticity is generally defined as the state or condition of being air or gas tight. In interconnect applications, hermetic refers to packaging technology designed to prevent gasses from passing through pressure barriers via the connector. The reason this is important is to prevent any moisture in the leaked gas from condensing inside the pressurized enclosure. The point at which moisture will condense is called the "dew point"—or the precise moment when humidity, pressure, and temperature allows condensation to form.

When an electric current must pass through a high-pressure differential barrier, the potential exists for gases, moisture, and in some rare cases particulate matter, to also penetrate the barrier and, as described above, to form condensation in the equipment enclosure. In the receptacle cabling on the pressurized side of the barrier this may result in dielectric breakdown, corrosion, and loss of insulation resistance between conductors (a properly built plug assembly on the non-vacuum side is adequately sealed with conventional environmental protections and so is impervious to moisture ingress). The classic hermetic application is a receptacle feed-through penetrating a pressurized bulkhead, or a pressurized equipment housing—such as is found in inertial navigation units in aircraft. The introduction of moisture-laden air into such an enclosure may be enough to produce false readings and other malfunctions in the device. The ultimate purpose of hermetic sealing then is not merely to "avert the ingress of air or gas into pressurized environments to prevent corrosion resulting from dew point condensation," but more precisely to insure malfunctions do not occur in sensitive electronic systems due to said ingress. Hermetic connectors must perform their magic at extremely high pressure differentials, often as high as 20,000 psi, in order to prevent fluids and high pressure in one area from impacting normal

© 2013 Glenair, Inc.

Introduction to Glenair Hermetic Connector Products



The connectors enter the furnace on a conveyor belt and a gas-tight hermetic seal is formed around all contacts, and between the glass seal and the connector shell, when the vitreous glass is melted in the furnace and then cooled under controlled conditions.

environmental conditions and pressures in another. Hermetic customers may specify the mating connector series, mounting style (jam nut, weld mount, etc.), pin or socket gender and layout, contact termination type (solder cup, flat eyelet or PCB termination), conductive or non-conductive finish, polarization and so on. Glenair customers may also choose from a broad range of contact densities and package sizes, including standard-density MIL-DTL-38999 Series I, II, III and IV, our .76 in. contact spacing Series 80 "Mighty Mouse" Connector, and both Micro-D and D-Subminiature rectangulars. Glenair's complete in-house hermetic capability also affords us the ability to produce a wide-range of special purpose hermetic connectors designed to meet individual and unique customer specifications.

Connector Hermeticity

Connector Hermeticity may be negatively affected both by the permeability of shell materials and the quality of the sealing technology.

Metal materials are chosen due to their relative impermeability to gas, although certain plastics may also be used. Glenair typically specifies stainless steel, titanium or Kovar® for its hermetic products, as all three base materials provide an effective barrier against gas ingress and are able to withstand the high heat of the fabrication process. But even metal materials are permeable to gas leakage, and their permeability can be compromised when weld and solder joints are formed between connector shell materials and the base material of the bulkhead. Electrode coatings used in welding readily attract moisture in the work which can result in micro-cracks and fissures. If other stresses are present, such as vibration and shock, micro-cracking can progress to fissures which are visible to the human eye. Optimizing hermeticity should therefore always include examination of welds for any cracks or fissures that could provide a leakage path.

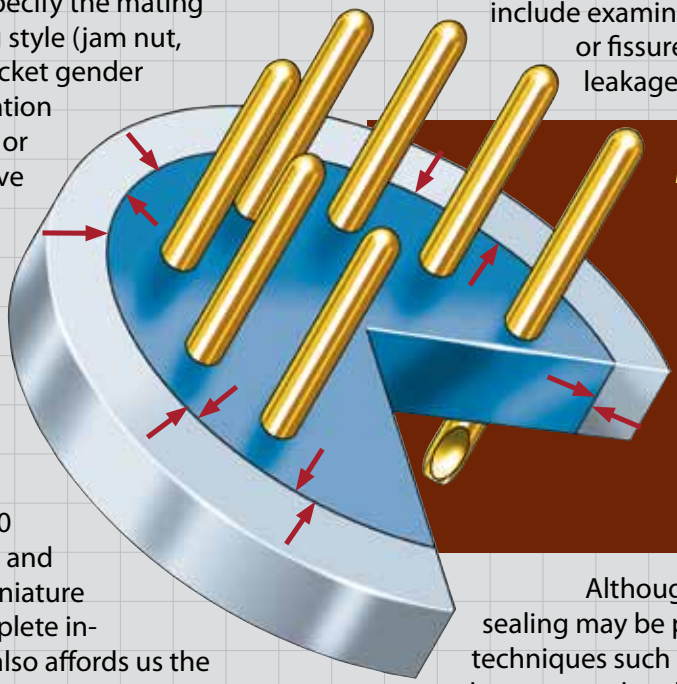

In Matched Seal hermetics, thermal expansion of the glass and metal materials is relatively small—an important factor in the design of Micro-D hermetic connectors, due to varying degrees of stress on the glass caused by the rectangular shape.

Although moderately effective sealing may be produced with simple techniques such as epoxy potting, fused glass-to-metal seals are usually specified in high-pressure applications. Glass is an excellent insulator, bonds well to metallic surfaces and is extremely corrosion resistant. And because of its robust mechanical strength and resistance to radical changes in temperature and pressure, glass seals are extremely resistant to any cracking which may introduce leaks into the hermetic package.

Kovar® is a registered trademark of Westinghouse Electric Company.

© 2013 Glenair, Inc.

Introduction to Glenair Hermetic Connector Products

Series 80 Mighty Mouse Hermetic Connectors



Series 80 Mighty Mouse Hermetic Mighty Mouse Hermetic Receptacles feature stainless steel shells and Alloy 52 iron alloy contacts. The compression glass seal is rated at 1 X 10^{-7} cc/second helium leak rate. Coupling styles include double-start stub acme, quick disconnect and bayonet.

Receptacles are available in four mounting styles:

- Solder Mount
- Square Flange
- Jam Nut
- Weld Mount

Technical Specifications

- 3 Through 130 Contacts
- Hermetically Sealed
- 5 Amp Contact for #22 thru #28 Wire
- .076" (1.9) Contact Centers
- 500 Volt AC
- Printed circuit board or solder cup contacts.

Fused glass seals may be produced from various recipes of ground, non-crystalline solids such as silicates, borates and phosphates. When heated to high temperature and then cooled, these materials fuse into an amorphous solid called glass. In hermetic connector manufacturing, the glass material is typically introduced as a pre-formed glass seal insulator tooled to precise dimensions. The glass must be exactingly selected for each application according to its ability to form a strong bond with the chosen metal materials.

Electrical properties, such as dielectric withstanding voltage and strength are also considered as is thermal and shock stability. Depending on the style of connector being produced (rectangular versus circular, for example) two categories of glass-seal hermetics may be specified. These are known as Matched and Mismatched (or Compression) Seals.

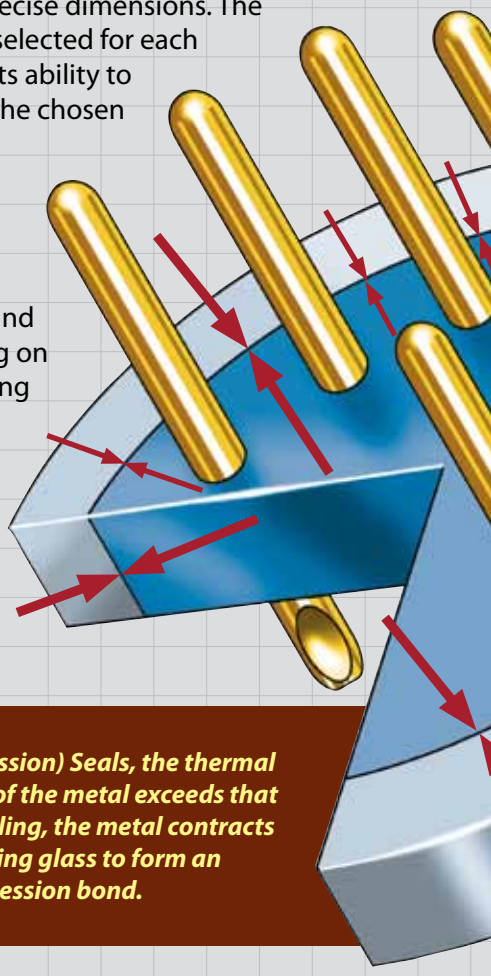

In Mismatched (Compression) Seals, the thermal expansion/contraction of the metal exceeds that of the glass. During cooling, the metal contracts into the already solidifying glass to form an extremely robust compression bond.

In Matched Seal hermetics, the thermal expansion of the glass and metal materials are relatively close, usually within 10% of each other. This results in a product in which the stress in the glass is relatively small, since the expansion and contraction of both materials during manufacture is closely matched. This is extremely important in glass hermetic connectors such as the Micro-d since the rectangular shape of the connector shell

© 2013 Glenair, Inc.

can exert varying degrees of stress on the glass. At ambient temperatures, the glass is chemically wetted (bonded) to the metal shell and contacts, but under little or no pressure or stress. Matched Seals can withstand high thermal and mechanical shocks, and are generally easier to manufacture than Mismatched (Compression) hermetic seals. Kovar®, a combination of iron, nickel and cobalt, is the material of choice for Matched Seal hermetic receptacles—both shells and contacts. Kovar® is a low-expansion metal with a coefficient of expansion rating matched to the glass material that forms the hermetic seal.

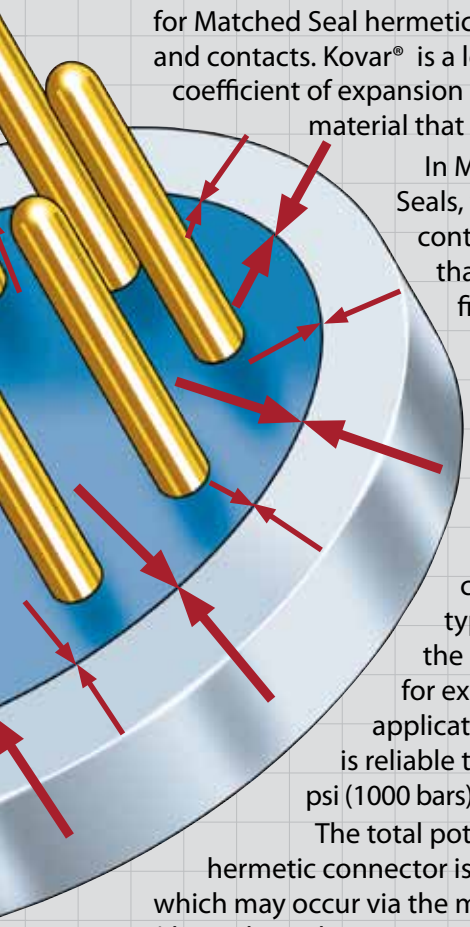

In Mismatched (Compression) Seals, the thermal expansion/contraction of the metal exceeds that of the glass. During the firing process, the metal materials, usually stainless steel, expand at a greater rate than the glass. During cooling, the metals contract back into the already solidifying glass to form an extremely robust compression bond. This type of seal is consequently the most frequently specified for extreme, high-pressure applications since the seal produced is reliable to pressures as high as 14,000 psi (1000 bars).

The total potential for leakage in a hermetic connector is the sum of any permeation which may occur via the metal materials themselves (through cracks or open pores), and any leakage that may occur via the seal. An additional source of leakage—uncontrolled from the connector manufacturer's perspective—results from sub-standard mounting of the hermetic package on the bulkhead or enclosure. Depending on the surface material of the bulkhead, hermetic receptacles may be welded or soldered in place. Low temperature brazing is also possible in certain applications as is the use of adhesive sealants.

Mil-Aero Cylindricals:

QPL MIL-DTL-38999
MIL-DTL-26482 Type
MIL-DTL-83723 Type
Hermetic Connectors



Various styles of standard and high-density cylindrical connectors are manufactured using glass seal hermetic technology. These hermetic connectors are ideally suited for high-pressure/low leakage applications in air, sea and space environments. Glenair is on the Qualified Product List (QPL) for all families of MIL-DTL-38999 Series I, II, III and IV Hermetic Connectors. We also offer lower density cylindrical connectors from the MIL-DTL-26482 and MIL-DTL-83723 families. The latter two series are non-QPL products.

- DSCC Approved MIL-DTL-38999
- Compression Glass Seals
- Alloy 52 Gold-Plated Contacts
- Four Coupling Styles: Scoop-Proof Bayonet, Low-Profile Bayonet, Triple-Start Threaded Coupling, and Scoop-Proof Breach Coupling
- Fluorosilicone Interfacial Seals
- Passivated and Nickel-Plated SS Shells

© 2013 Glenair, Inc.

Introduction to Glenair Hermetic Connector Products

MIL-DTL-5015 Type "H" Class Hermetic Connectors



Considered the "Granddaddy" of all connector specifications, MIL-DTL-5015 covers power connectors available in contact sizes ranging from #16 up to #0. Operating voltages range from 200 up to 3000 volts AC (rms).

Currently there is not a Qualified Parts List (QPL) with Defense Supply Center Columbus (DSCC) for the MIL-DTL-5015 hermetic product. However, Glenair has designed and tooled these products to meet or exceed the current Mil-Spec requirements.

Features:

- Box Mount and Solder Mount
- Shell sizes 8 through 36
- CRS with Fused Tin plating or stainless steel with a Passivate finish
- All appropriate contacts in solder cup and pierced contact styles
- Supplied with a bonded interfacial seal to improve moisture resistance
- Custom configurations available
- Commercial equivalents available

Finally, mechanical mounting seals such as O-rings found on jam-nut mounts or drilled mounting flanges are used in applications where the cost or difficulty of welding or soldering is impractical. Regardless of the choice of mounting technology, care must be given to ensure inadvertent leakage paths are not introduced to the system. Vapor condensation in pressurized enclosures may also be affected by the material makeup of devices located inside the enclosure. Materials such as silicones, adhesives, lubricants and Teflon insulation can all outgas water vapor, and so contribute to the total vapor pressure inside the housing. As discussed above, this rise in vapor pressure will directly impact the condensation dew point of the protected environment.

Hermetic seals are qualified via various methodologies including helium testing and dye penetrant. The purpose of both types of tests is to detect and measure leakage under pressure. The dye penetrant method has the advantage of revealing the exact location of a full-scale leak, while helium testing measures overall leakage of the hermetic device. In helium testing, a pressure differential between the internal volume of the package and the external environment is created. The resultant pressure gradient causes the helium to diffuse through the connector shell, contacts and/or glass seals. Quantitative and qualitative measurements are then taken using appropriate sensing instruments.

Manufacturing Capability

Hermetic connectors are constructed from a core component-set that includes the connector shell, the vitreous glass insert and the selected contacts. Matched hermetic shells may be machined from Kovar®, an iron-nickel-cobalt alloy with a coefficient of expansion closely balanced to the glass inserts. Stainless and cold-rolled steels with 52 nickel-alloy contacts are suitable for compression-seal hermetics. Contacts used in hermetic connectors must be fabricated from Kovar® or from other high-grade materials that can withstand high-heat and bond effectively to the vitreous glass seal.

© 2013 Glenair, Inc.

The individual parts are mounted into special fixtures that align them during the exothermic atmosphere firing process. A conveyor belt transports the work through the furnace chamber, where a reducing atmosphere prevents oxidation of the metal components. As discussed above, a gas-tight hermetic seal is formed around all contacts and the glass seal and connector shell when the vitreous glass is melted in the furnace and then cooled under controlled conditions. After firing, helium testing and finish plating are completed and the remaining connector components such interfacial seals, O-rings, jam-nuts and so on are assembled to the connector body.

Quality control is a critical step in hermetic connector manufacturing. Connectors are not only subjected to a rigorous leak test, but are also visually inspected to ensure all components are seated in their correct positions and no surface imperfections or micro-cracking is evident. The connectors are also subjected to electrical testing as required by military and industry standards and by customer requirements.

Dating back to our first hermetic order, Glenair has been in the hermetic connector business for over 30 years. Today, our capabilities are an arm and a leg greater than they once were, but our commitment to high-quality and outstanding availability has remained constant. As you can see from the wide range of commercial and military standard hermetic products we now produce, Glenair is positioned to service an incredibly broad range of both commercial and military standard hermetic packaging requirements.

Glenair now offers shells in Inconel® and Titanium; built to meet the demands of extreme pressure differentials and corrosion resistance. Consult the factory for product ordering information.

22
Ti

MIL-DTL-24308/9

QPL D-Subminiature Hermetic Connectors

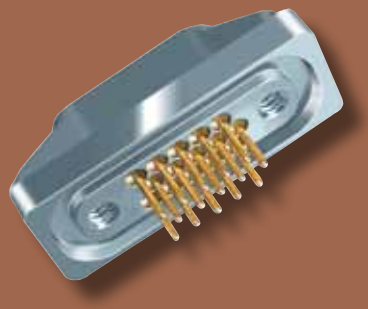

These hermetically sealed connectors are specifically designed for applications where conditions of extreme pressure differentials exist, or where an inert gas atmosphere must be maintained.

Glenair is currently qualified for the MIL-DTL-24308/9 -1 through 20 as well as for the Space Grade class, M24308/9-21 through 40.

Features:

- One-piece machined shell for both the Solid Flange Mount (Type A) and Jackpost Mount (Type B) configurations
- Shell sizes 1 through 5
- CRS with Fused Tin plating, "H" Class, stainless steel with a matte nickel finish ("K" Class), or Aluminum Alloy Electroless Nickel w/ Hermetic Epoxy Seal
- Space Grade Versions
- All appropriate contacts in solder cup or pierced contact styles
- Many custom configurations available

© 2013 Glenair, Inc.

Glenair®

Introduction to Glenair Hermetic Connector Products

Micro-D

O-Ring Sealed and Weld Mount Hermetic Receptacles

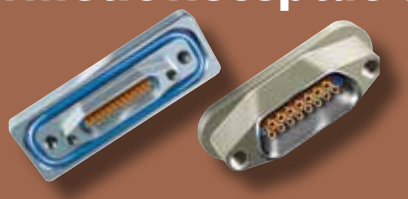

These high contact density hermetic connectors feature .050 inch contact spacing, rugged construction for demanding applications and glass hermetic sealing for severe environmental and pressure differential operating conditions. Designed for use in missile systems and other high altitude aerospace applications, Glenair's Micro-D Hermetic Connectors offer outstanding performance in a lightweight microminiature package. The two basic mounting configurations, a weld-mount or O-ring mount design may be customized for unique application requirements.

Features:

- Socket Receptacles
- Matched, Glass to Metal Seals,
- 1,000 PSI
- 9 through 100 Contacts
- Weld, O-Ring or Solder Mount; Integral Jackposts
- 1.5 AMP; 150 Volt AC
- Solder Cup (#26 Gage Wire), PC Tails, and Special Contacts for Wire Bonding

Hermetic Glossary

Air Leakage

The measure of gas ingress across an hermetic barrier. Total air leakage is the sum of the gas which passes through the seal itself, the permeable shell materials or via cracks or gaps in the mounting area.

Bonding

In hermetic glass-to-metal sealing, the permanent fusing of the constituent connector parts —contacts, connector body and glass seal—to one another using surface preparation techniques and high-heat.

Coefficient of Expansion

A mathematically derived value describing the dimensional change of a material when subjected to a measured change in temperature. Factored into hermetic connector fabrication to insure the glass and metal materials return to a known state of compression after the heating and cooling process is completed.

Compression Seal

The most effective glass-to-metal sealing. It is created by using metal shell and contact materials which expand at a greater rate than the glass during heating. During cooling, the metal materials contract back into the already solidifying glass to form a robust compression bond.

Environmentally Sealed

A class of interconnect components which are sealed against moisture ingress through the use of gaskets, O-rings, grommets or other means. Many applications that could use costlier hermetically-sealed connectors can be adequately protected using simpler environmental sealing techniques. The decision to use hermetics is generally made when the ability to withstand high-pressure differentials (32psi and up) is added to the application performance specifications.

Feedthrough

A double-sided receptacle connector device, mounted in a bulkhead or wall, used in interconnect

© 2013 Glenair, Inc.

systems to pass wires through barriers without creating an entry point for moisture, dust or chemical pollutants. Hermetic feedthrough connectors are used when the compartments on either side of a bulkhead must be maintained at different pressure levels.

Flange

Disc-shaped projection extending from or around the periphery of a receptacle connector designed to house O-ring sealing devices, fasteners or other mounting hardware. A flange may also be used to provide a greater surface area of metal material to aid in weld or solder mount attachment of receptacle connectors to bulkheads.

Hermeticity

The measure of a connector's permeability to gas ingress. In general terms, it means how "airtight" the device is when measured using a helium mass spectrometer leakage test. Since all materials are ultimately permeable to gas ingress at some point, hermeticity ratings are used to define acceptable performance levels as required by each individual application.

Hermetic Connector

Any of various forms of interconnect devices which are outfitted with specialized seals to prevent moisture and gas from passing through the connector and damaging sensitive electronic equipment. Glass sealed hermetic connectors are the most effective, with compression-glass sealed connectors providing the highest levels of protection.

Kovar®

An iron-nickel-cobalt alloy with a coefficient of expansion closely matched to certain glass seals commonly used in both connector bodies and contacts.

Matched Seal

A category of glass-to-metal sealing. In matched seals, the coefficient of expansion for the glass seal, contacts and connector body are relatively the same, resulting in a finished product with little or no built-in stress between the constituent parts.

Mismatched Seal

Also known as compression sealing, the different material coefficient of expansion values in the glass and metal materials result in an hermetic seal that is under significant compression stress after cooling. Hermetics of this type can withstand higher-pressure differentials than matched seals.

Solder or Weld Mount

One of the most common mounting configurations for hermetic connectors, especially for electronic equipment such as switches and transducers. Unlike jam-nut mounted connectors, weld mount hermetics are permanently attached to the pressurized bulkhead, typically with laser, TIG or MIG welding technology.

Series 22
Geo-Marine® Hermetic Connectors



Series 22 Geo-Marine® Connectors offer high-density insert arrangements for a variety of oceanographic, geophysical and other severe commercial applications. The mated stainless steel plug and receptacle have a hydrostatic pressure sealing capability of up to 5000 psi (345 bar) and are available in either glass-seal hermetic or rigid dielectric environmental insulators.

- **Single-start, stub-Acme thread reduces thread fouling and binding due to dirt, grit and other foreign matter. Castellated and knurled coupling ring provides easy mating and unmating—even with arctic gloves.**

© 2013 Glenair, Inc.

Glenair Hermetic Connector Products
Space Grade Mod Code

What is outgassing?

Plastic and rubber materials give off gaseous molecules. For example, the smell inside a new car is caused by polymer outgassing. Heat and vacuum increase the rate of diffusion. In a spacecraft the gases coming off polymers can contaminate optical surfaces and instruments. The result is degraded performance.

How is outgassing measured?

The space industry has adopted a standardized test procedure, ***ASTM E 595***, to evaluate out-gassing properties of polymers. Small samples of material are heated to 125° C. at a vacuum of 5 X 10^{-5} torr for 24 hours. Then the sample is weighed to calculate the ***Total Mass Loss*** (TML). The TML cannot exceed 1.00% of the total initial mass. During the test, outgassed matter condenses on a cooled collector plate. The quantity of outgassed matter is caluclated to determine the ***Collected Volatile Condensable Material*** (CVCM). The CVCM cannot exceed 0.10% of the original specimen mass.

What is NASA screening?

NASA specification EEE-INST-002 provides instructions on selecting, screening and qualifying parts for use on NASA GSFC space flight projects.

What screening level is required?

NASA defines three levels of screening: level 1 for highest reliability, level 2 for high reliability, and level 3 for standard reliability. Level 3 equates to standard lot acceptance inspection. Levels 1 and 2 call for additional testing.

HOW TO ORDER SPACE GRADE CONNECTORS

Step 1: Find a Standard Part Number

Electroless nickel plated shells are preferred for space flight. Cadmium plating is prohibited.

Step 2: Select a NASA Screening Level

The term "Screening Level" refers to the final inspection procedure.

Level 1 for mission-critical highest reliability
Level 2 for high reliability
Level 3 for standard reliability

Step 3: Choose Outgassing Processing

A detailed explanation of outgassing is on the following pages. The fluorosilicone rubber seals commonly used on aerospace-grade connectors such as MIL-DTL-38999 and Series 79 connectors, along with certain bonding agents and inks, do not meet NASA outgassing requirements unless the connector is specially processed. Glenair outgassing tests have shown oven baking or thermal vacuum outgassing processing are sufficient to reduce outgassing levels to NASA standards. Oven baking is more economical than thermal vacuum outgassing.

Step 4: Select the Mod 429 Code that Matches the Desired Level of Screening and Outgassing

Use the following table to choose the right modification code. Add the mod code to the connector part number. Example: 790-024PC-13ML-***429C***

NASA SCREENING LEVELS AND MODIFICATION CODES

NASA Screening Level	Special Screening Only	Special Screening Plus Outgassing Processing	
		8 Hour Oven Bake 400° F.	Thermal Vacuum Outgassing 24 hrs. 125° C.
Level 1 Highest Reliability	Mod 429B	Mod 429J	Mod 429C
Level 2 High Reliability	Mod 429	Mod 429K	Mod 429A
Level 3 Standard Reliability	(Use standard part number)	Mod 186	Mod 186M

© 2013 Glenair, Inc.

Glenair Hermetic Connector Products
Special Leak Rate Modification Codes

Leak Rate Designator
B *– (See Table Below)*

– 585 B

Mod Code
585 *– Increased Hermeticity Mod Code*

What is the –585 Mod Code?

Glenair offers an array of hermetic connectors with more stringent leak rate requirements. By adding "**–585**" and the designator letter "**A**", "**B**" or "**C**"—depending on the hermeticity desired—to the end of a standard part number, connectors will be built to exceed the standard 1 x 10^{-7} cc Helium per second leak rate specified on most Glenair hermetics.

HERMETIC LEAK RATE MOD CODES	
Designator	**Required Leak Rate**
A	1 x 10^{-10} cc's Helium per second
B	1 x 10^{-9} cc's Helium per second
C	1 x 10^{-8} cc's Helium per second

Catalog Notes

For all parts in this catalog:

- All parts will be identified with manufacturer's name and part number, space permitting.
- Glenair 600 series backshell assembly tools are recommended for assembly and installation.
- Dimensions are subject to change without notice. Metric dimensions appear in parentheses in diagrams and tables, based on 1 inch = 25.4 mm, for reference only. Unless otherwise specified, the following other dimensional tolerances apply:

  .xx = ± .03 (0.8) Lengths = ± .060 (1.52)
  .xxx = ± .015 (0.4) Angles = ± 5°

Customers are advised to consult the factory for the latest specifications, particularly to confirm critical dimensions such as connector lengths, threads, and so on. When errors or mistakes are brought to our attention, corrected content is posted immediately to www.glenair.com.

© 2013 Glenair, Inc.

Glenair®

Helium Leak Rates and Testing

A

Hermeticity

Hermeticity is defined as "the state or condition of being airtight". Sophisticated military electronics enclosures can experience electrical failure from ingress of moisture. System engineers can design the enclosure to withstand exposure to moisture and condensation by using "moisture-hardened" components and conformal coatings, but often the most practical approach is to install hermetically sealed electrical I/O connectors. Glass-to-metal seals provide assurance that, over the life of the enclosure, the accumulated amount of water vapor inside the box will not exceed the amount necessary to form condensation. Other applications for Micro-D hermetic connectors include vacuum chambers, cryogenics, and enclosures filled with inert gas.

Hermetic Testing

All hermetic connectors are 100% tested prior to shipment. A helium leak test is performed to certify the hermetic seal. This test is conducted by inducing a 1 ATM vacuum on one side of the connector. Helium gas is released on the other side, and a mass spectrometer "counts" the number of helium molecules that penetrate the connector seal. Helium leak testing takes advantage of the small size of a helium molecule compared to air or water vapor. Helium is inert, rare in our atmosphere, and is easy to detect with a mass spectrometer.



Helium Leak Rates

Std cc/sec Approximate	Approximate Bubble Equivalent
1×10^{-1}	1 cc/10 sec
1×10^{-2}	1 cc/100 sec
1×10^{-3}	1 cc/hour
1×10^{-4}	1 cc/3 hours
1×10^{-5}	1 cc/24 hours
1×10^{-6}	1 cc/2 weeks
1×10^{-7}	3 cc/year
1×10^{-8}	1 cc/3 year
1×10^{-9}	1 cc/30 years
1×10^{-11}	1 cc/3000 years



Close up of gas tube assembly undergoing helium leak test at the Glenair Factory in Glendale, CA

© 2013 Glenair, Inc.

Hermetic Connector Designer's Application Checklist

Name _____

Company Name _____

Address _____

City and State _____

Country and Postal Code/Zip _____

Telephone _____ E-mail _____

Specification Reference:

- ❑ MIL-DTL-38999
- ❑ MIL-DTL-5015
- ❑ MIL-DTL-26482
- ❑ MIL-DTL-83723
- ❑ MIL-DTL-83513
- ❑ MIL-DTL-24308
- ❑ Glenair Series 80
- ❑ Other (i.e. Series 79, Geo-Marine)

Shell Style:

- ❑ Jam Nut
- ❑ Box Mount
- ❑ Solder Mount
- ❑ Weld Mount
- ❑ Flange Mount
- ❑ Dual Flange PCB
- ❑ Wall Mount
- ❑ Connector Adaptor

Shell Size/Insert Arrangement: _____

Pin Count: _____

Contact Gender:

- ❑ Pin
- ❑ Socket

Shell Rotation/Clocking Position: _____

Shell Material and Finish: _____

Termination (PC tails, Solder Cup, Radius, Eyelet, etc.): _____

_____

_____

Pressure Requirement (PSI): _____

Temperature Requirement: _____

Hermeticity Requirement (1x10-* Cc/he) _____

IR: _____ **DWV:** _____

Marking: _____

Connector Application: _____

QPL Req'd: Yes _____ No _____

What material(s) will the connector be in contact with, i.e, fluid, steam, mating connector material:

_____

_____

_____

Special Instructions/Notes:

_____

_____

_____

_____

Note: Connectors can be NASA screened, outgassed or be rated for higher hermeticity. Titanium and Inconel® materials additionally are available as well as thermocouple contacts, quadrax, and co-ax contacts.

© 2013 Glenair, Inc.

Mil Qualified D38999 Series I, II, III and IV Hermetic Receptacles—Pin and Socket—Plus Glenair Commercial Equivalents • Built-In Maximim Design Flexibility

Quick Selection Guide

Part number	Description	Page
	MIL-DTL-38999 Series I, II, III and IV Hermetic Class Insert Arrangements	B-2 – B-3
	MIL-DTL-38999 Series I, II, III and IV Hermetic Class Layouts and Pin Counts	B-4
	MIL-DTL-38999 Hermetic Class Material Specifications and Finishes	B-5
	MIL-DTL-38999 Connector Performance Specifications	B-6 – B-8
	MIL-DTL-38999 Contact Performance Specifications	B-9
	MIL-DTL-38999 Series I – IV Alternate Keyway Positions	B-10 - B-12
	Recommended Torque Values	B-13
	MIL-DTL-38999 Hermetic Connectors and Environmental Mates	B-14 – B-15
MS27469 / 231-100-H0	Wall Mount Hermetic Receptacle, Series I	B-16 – B-17
MS27470 / 231-100-H7	Jam Nut Mount Hermetic Receptacle, Series I	B-18 – B-19
MS27471 / 231-100-H5	Solder Mount Hermetic Receptacle, Series I	B-20 – B-21
231-103-H7	Jam Nut Mount Hermetic Bulkhead Feed-Thru, Series I	B-22 – B-23
231-103-H9	Sav-Con® Jam Nut Mount Bulkhead Feed-Thru, Series I	B-24 – B-25
257-255	Jam Nut Mount Hermetic Receptacle, Series I	B-26 – B-27
947-117	Jam Nut Mount Hermetic Bulkhead Feed-Thru, Series I	B-28 – B-29
MS27475 / 232-100-H0	Wall Mount Hermetic Receptacle, Series II	B-30 – B-31
MS27476 / 232-100-H2	Box Mount Hermetic Receptacle, Series II	B-32 – B-33
MS27477 / 232-100-H7	Jam-Nut Mount Hermetic Receptacle, Series II	B-34 – B-35
MS27478 / 232-100-H5	Solder Mount Hermetic Receptacle, Series II	B-36 – B-37
232-103-H7	Jam Nut Mount Hermetic Bulkhead Feedthrough, Series II Type	B-38 – B-39
232-103-H9	"Sav-Con®" Connector Saver Jam Nut Mount Hermetic Bulkhead Feedthrough, Series II Type	B-40 – B-41
237-280	Special Weld-Mount Hermetic Receptacle, Series II	B-42 – B-43
947-120	Jam Nut Mount Hermetic Bulkhead Feed-Thru, Series II	B-44 - B-45
947-278	Jam Nut Mount Hermetic Bulkhead Feed-Thru	B-46 – B-47
D38999/21 / 233-100-H2	Box Mount Hermetic Receptacle, Series III	B-48 – B-49
D38999/23 / 233-100-H7	Jam Nut Mount Hermetic Receptacle, Series III	B-50 – B-51
D38999/25 / 233-100-H5	Solder Mount Hermetic Receptacle, Series III	B-52 – B-53
D38999/27 / 233-100-H8	Weld Mount Hermetic Receptacle, Series III	B-54 – B-55
233-103-H7	Jam Nut Mount Hermetic Bulkhead Feed-Thru, Series III	B-56
233-103-H9	Jam Nut Mount Hermetic Plug/Receptacle Bulkhead Feed-Thru, Series III	B-57
237-033	Jam Nut Mount Hermetic with Double O-Rings, Series III	B-58 – B-59
237-063	Special Hermetic Jam Nut Mount Receptacle, Series III	B-60 – B-61
237-153	Hermetic Dual Flange Jam Nut Mount Receptacle, Series III	B-62 – B-63
257-093	Jam Nut Mount Hermetic Bulkhead Feed-Thru, Series III	B-64 - B-65
257-121	Special Jam Nut Mount Hermetic Receptacle with Accessory Threads, Series III	B-66 – B-67
257-215	Jam Nut Mount Hermetic Bulkhead Feed-Thru w/ Crimp Removable Contacts, Series III	B-68 – B-69
257-216	Jam Nut Mount Hermetic Bulkhead Feed-Thru w/ Crimp Removable Contacts, Series III	B-70 – B-71
257-288	Box Mount Hermetic Bulkhead Feed-Thru w/ Crimp Removable Contacts, Series III	B-72 - B-73
257-332	Hermetic Jam Nut Receptacle w/ Crimp Removable Socket Contacts, Series III	B-74 – B-75
257-333	Hermetic Jam Nut Receptacle w/ Crimp Removable Contacts, Series III	B-76 – B-77
947-082	Jam Nut Hermetic Bulkhead Feed-Thru, Series III	B-78
947-115	Jam Nut Hermetic Bulkhead Feed-Thru, Series III	B-79
947-282	Flange Mount Hermetic Bulkhead Feed-Thru, Series III	B-80 – B-81
D38999/41 / 234-100-H2	Box Mount Hermetic Receptacle, Series IV	B-82 – B-83
D38999/43 / 234-100-H7	Jam Nut Mount Hermetic Receptacle, Series IV	B-84 – B-85
D38999/45 / 234-100-H5	Solder Mount Hermetic Receptacle, Series IV	B-86 – B-87
D38999/48 / 234-100-H8	Weld Mount Hermetic Receptacle, Series IV	B-88 – B-89
980-002	Non-Environmental Rear Accessory Thread Adapter for MIL-DTL-38999/23 and /43	B-90 – B-91

© 2013 Glenair, Inc. U.S. CAGE Code 06324 Printed in U.S.A.

MIL-DTL-38999 Series I, II, III, and IV Hermetic Class Connectors

Insert Arrangements (IAW MIL-STD-1560)

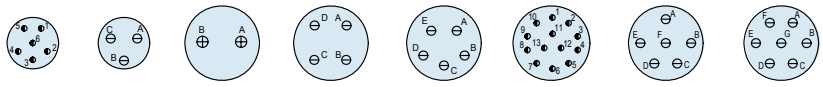

Series I	9-35	9-98	11-2	11-4	11-5	11-35	11-98	11-99
Series II	8-35	8-98	10-2		10-5	10-35	10-98	10-99
Series III	A35	A98	B2	B4	B5	B35	B98	B99
Series IV	---	---	---	---	B5	B35	B98	B99

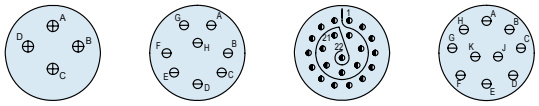

Series I	13-4	13-8	13-35	13-98
Series II	12-4	12-8	12-35	12-98
Series III	C4	C8	C35	C98
Series IV	C4	---	C35	C98

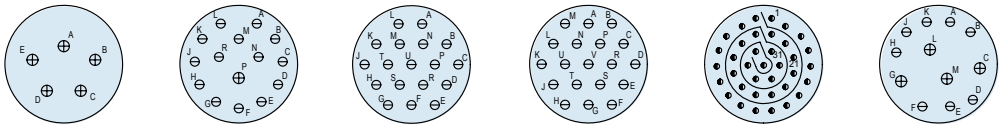

Series I	15-5	15-15	15-18	15-19	15-35	15-97
Series II	14-5	14-15	14-18	14-19	14-35	14-97
Series III	D5	D15	D18	D19	D35	D97
Series IV	D5	---	D18	D19	D35	D97

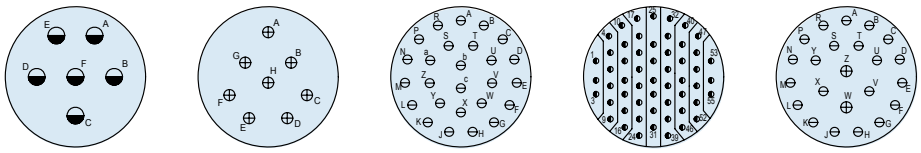

Series I	17-6	17-8	17-26	17-35	17-99
Series II	16-6	16-8	16-26	16-35	16-99
Series III	E6	E8	E26	E35	E99
Series IV	E6	E8	E26	E35	---

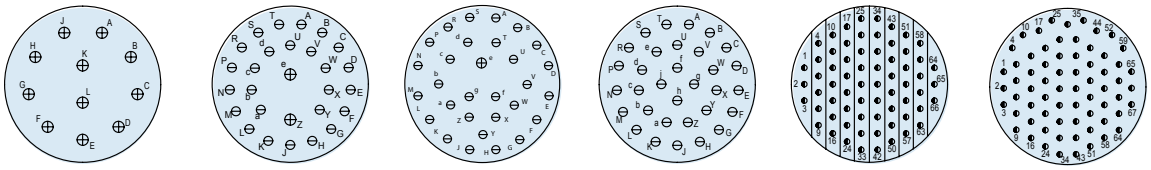

Series I	19-11	19-28	19-30	19-32	19-35	19-45
Series II	18-11	18-28	18-30	18-32	18-35	18-45
Series III	F11	F28	F30	F32	F35	F45
Series IV	F11	---	---	F32	F35	---

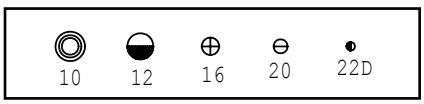

Dimensions in Inches (millimeters) are subject to change without notice.

© 2013 Glenair, Inc.

U.S. CAGE Code 06324

Printed in U.S.A.

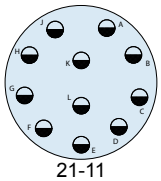

Series I	21-11	21-16	21-24	21-25
Series II	20-11	20-16	20-24	20-25
Series III, IV	G11, G11	G16, G16	G24, G24	G25, ---

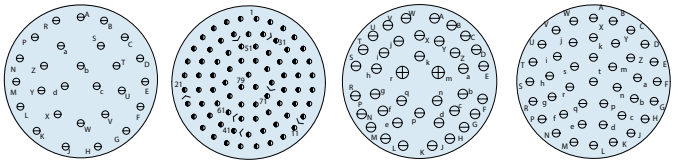

Series I	21-27	21-35	21-39	21-41
Series II	20-27	20-35	20-39	20-41
Series III, IV	G27, ---	H35, H35	G39, ---	G41, G41

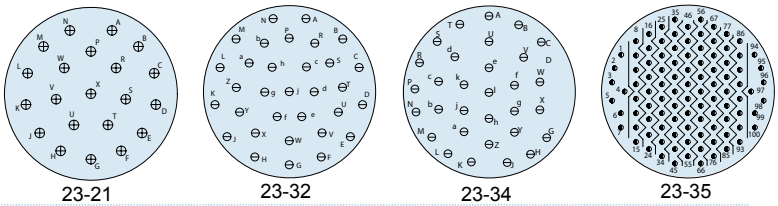

Series I	23-21	23-32	23-34	23-35
Series II	22-21	22-32	22-34	22-35
Series III, IV	H21, H21	H32, ---	H34, ---	H35, H35

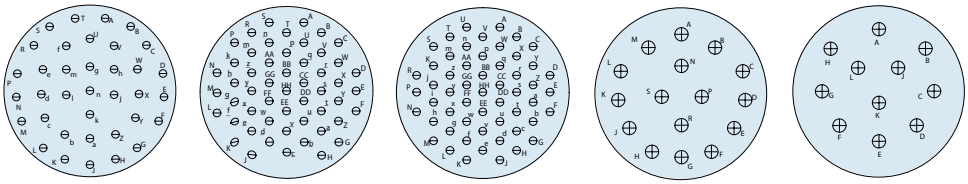

Series I	23-36	23-53	23-55	23-97	23-99
Series II	22-36	22-53	22-55	22-97	22-99
Series III, IV	H36, ---	H53, ---	H55, H55	H97, ---	H99, ---

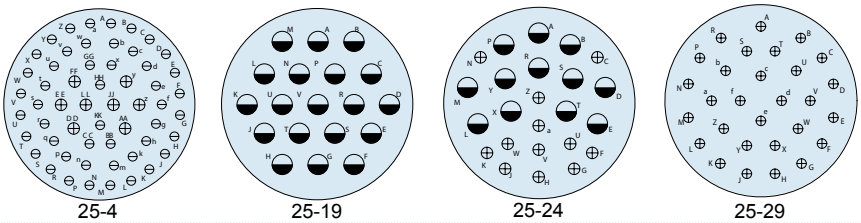

Series I	25-4	25-19	25-24	25-29
Series II	24-4	24-19	24-24	24-29
Series III, IV	J4, J4	J19, J19	J24, J24	J29, J29

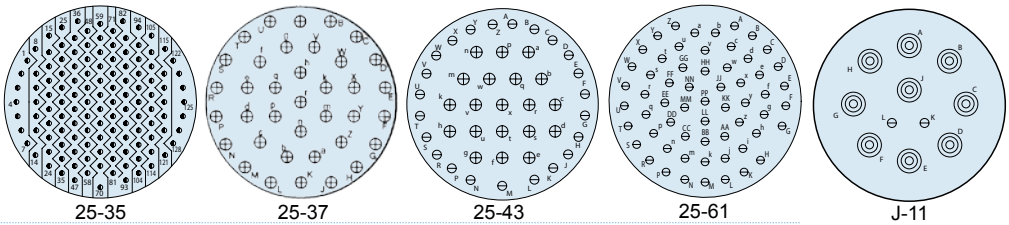

Series I	25-35	25-37	25-43	25-61	J-11

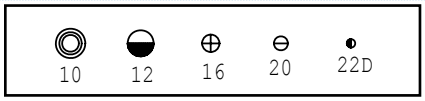

Dimensions in Inches (millimeters) are subject to change without notice.

© 2013 Glenair, Inc.

U.S. CAGE Code 06324

Printed in U.S.A.

MIL-DTL-38999 Series I, II, III, and IV Hermetic Class Connectors

Layouts and Pin Counts

Shell Size and Insert Arrangements				Number of Pins			
MS Series I	MS Series II	D38999 Series III	Service Rating	22D	20	16	12
9-35	8-35	A35	M	6			
9-98	8-98	A98	I		3		
11-2	10-2	B2	I			2	
11-4		B4	I		4		
11-5	10-5	B5	I		5		
11-35	10-35	B35	M	13			
11-98	10-98	B98	I		6		
11-99	10-99	B99	I		7		
13-4	12-4	C4	I			4	
13-8	12-8	C8	I		8		
13-35	12-35	C35	M	22			
13-98	12-98	C98	I		10		
15-5	14-5	D5	II			5	
15-15	14-15	D15	I		14	1	
15-18	14-18	D18	I		18		
15-19	14-19	D19	I		19		
15-35	14-35	D35	M	37			
15-97	14-97	D97	I		8	4	
17-6	16-6	E6	I				6
17-8	16-8	E8	II			8	
17-26	16-26	E26	I		26		
17-35	16-35	E35	M	55			
17-99	16-99	E99	I		21	2	
19-11	18-11	F11	II			11	
19-28	18-28	F28	I		26	2	
19-30	18-30	F30	I		29	1	
19-32	18-32	F32	I		32		
19-35	18-35	F35	M	66			
19-45	18-45	F45	M	67			
21-11	20-11	G11	I				11
21-16	20-16	G16	II			16	
21-24	20-24	G24	I		24		
21-25	20-25	G25	I		25		
21-27	20-27	G27	I		27		
21-35	20-35	G35	M	79			
21-39	20-39	G39	I		37	2	
21-41	20-41	G41	I		41		
23-21	22-21	H21	II			21	
23-32	22-32	H32	I		32		
23-34	22-34	H34	I		34		
23-35	22-35	H35	M	100			
23-36	22-36	H36	I		36		
23-53	22-53	H53	I		53		
23-55	22-55	H55	I		55		
23-97	22-97	H97	I			16	
23-99	22-99	H99	II			11	
25-4	24-4	J4	I		48	8	
25-19	24-19	J19	I				19
25-24	24-24	J24	I			12	12
25-29	24-29	J29	I			29	
25-35	24-35	J35	M	128			
25-37	N/A	J37				37	
25-43	24-43	J43	I		23	20	
25-61	24-61	J61	I		61		

Shell Size / Insert Arrangements	Number of Pins				
D38999 Series IV	22D	20	16	12	10
B5		5			
B35	13				
B98		6			
B99		7			
C4			4		
C35	22				
C98		10			
D5			5		
D18		18			
D19	37	19			
D35					
D97		8	4		
E6				6	
E8			8		
E26		26			
E35	55				
F11			11		
F32		32			
F35	66				
G11				11	
G16			16		
G35	79				
G41		41			
H21			21		
H35	100				
H55		55			
J4		48	8		
J11		2			9
J19				19	
J24			12	12	
J29			29		
J35	128				
J37			37		
J43		23	20		
J61		61			

Dimensions in Inches (millimeters) are subject to change without notice.

© 2013 Glenair, Inc.

TABLE I: HERMETIC CLASS MATERIALS	
Shell, Barrel Coupling and Jam Nut (Hermetic)	Stainless steel per AMS-QQ-S-763
Shell, Barrel, Coupling Nut and Jam Nut (Hermetic)	Carbon steel per ASTM-A108, Tin plated per ASTM-B545
Front and Rear Insulators	Glass-filled liquid crystal polymer (LCP) in accordance with MIL-M-24519, Type GLP-30F
Grommet, Peripheral Seal and Interfacial Seal	Blended elastomer, 30% silicone per ZZ-R-765, 70% fluorosilicone per MIL-R-25988
Hermetic Insert	Vitreous glass
Pin Contact (Hermetic)	Nickel-iron alloy per ASTM F30 (Alloy 52),50 microinches gold plated per ASTM B488 Type 3 Code C Class 1,27 over nickel plate per QQ-N-290 Class 2, 50-100 microinches
Socket Contact (Hermetic)	Copper Alloy, Gold Plated IAW ASTM B488, Type 3, Code C
Adhesives	Silicone and epoxy
Potting Compound, PCB and Solder Cup Versions	Environmental and Hermetic Connectors: High-strength epoxy, Hysol EE4215. Filter Connectors: Stycast 2850FT/Catalyst 11 thermally conductive epoxy encapsulant.

TABLE II: HERMETIC CLASS FINISHES			
Plating Code	**Material**	**Finish**	**Specification**
Glenair Commercial Equivalent Plating Codes			
Z1	Stainless Steel	Passivate	AMS-QQ-P-35
FT	Carbon Steel	Fused Tin Plate	ASTM-B545 or ASTM-B339
ZL	Stainless Steel	Electrodeposited Nickel	SAE-AMS-QQ-N-290, Class 2
MIL-DTL-38999 Plating Codes			
D	Carbon Steel	Fused Tin Plate	ASTM-B545 or ASTM-B339
E	Stainless Steel	Passivate	AMS-QQ-P-35
N	Stainless Steel	Electrodeposited Nickel	SAE-AMS-QQ-N-290, Class 2

*Additional materials are available, including titanium and Inconel®. Consult factory for ordering information.

© 2013 Glenair, Inc.

MIL-DTL-38999
Connector Performance Specifications

<table>
<tr><th>Test</th><th>Performance Specifications</th></tr>
<tr><td>Dielectric
Withstanding Voltage</td><td>(meets MIL-C-38999, paragraph 3.14)
Test voltage at sea level — 1300 Volts AC (rms).
Wired, assembled, unmated connectors withstand the following:
<table>
<tr><td>550 VAC (rms) @ 50,000 ft.</td></tr>
<tr><td>350 VAC (rms) @ 70,000 ft.</td></tr>
<tr><td>200 VAC (rms) @ 100,000 ft.</td></tr>
</table></td></tr>
<tr><td>Insulation Resistance</td><td>(meets MIL-C-38999, paragraph 3.13)
Unmated connectors shall be tested as specified in test method EIA-364-21
5000 megohms min. at 25° C</td></tr>
<tr><td>Supported Wire Size</td><td>(meets MIL-DTL-38999, paragraph 3.4.3.1)
<table>
<tr><th>Contact Size</th><th>Wire Gauge</th></tr>
<tr><td>22D</td><td>#22 - #28</td></tr>
<tr><td>20</td><td>#20 - #24</td></tr>
<tr><td>16</td><td>#16 - #20</td></tr>
<tr><td>12</td><td>#12 - #14</td></tr>
<tr><td>10</td><td>#10 - #12</td></tr>
</table></td></tr>
<tr><td>EMI Shielding</td><td>(meets MIL-DTL-38999, paragraph 3.31)
Effective over a range of 100 MHz to 10 GHz with a minimum 50dB effectiveness at 10GHz, in accordance with test method EIA-364-10
<table>
<tr><th rowspan="2">Frequency
MHz</th><th colspan="3">Attenuation Minimum dB</th></tr>
<tr><th>Series I</th><th>Series II</th><th>Series III and IV</th></tr>
<tr><td>100</td><td>90</td><td>65</td><td>90</td></tr>
<tr><td>200</td><td>88</td><td>60</td><td>88</td></tr>
<tr><td>300</td><td>88</td><td>55</td><td>88</td></tr>
<tr><td>400</td><td>87</td><td>55</td><td>87</td></tr>
<tr><td>800</td><td>85</td><td>45</td><td>85</td></tr>
<tr><td>1,000</td><td>85</td><td>45</td><td>85</td></tr>
<tr><td>1,500</td><td>69</td><td>—</td><td>76</td></tr>
<tr><td>2,000</td><td>65</td><td>—</td><td>70</td></tr>
<tr><td>3,000</td><td>61</td><td>—</td><td>69</td></tr>
<tr><td>4,000</td><td>58</td><td>—</td><td>68</td></tr>
<tr><td>6,000</td><td>55</td><td>—</td><td>66</td></tr>
<tr><td>10,000</td><td>50</td><td>—</td><td>65</td></tr>
</table></td></tr>
<tr><td>Thermal Shock</td><td>(meets MIL-C-38999, paragraph 3.7)
After cycling the connector between -65° C and +175° C, it will meet all applicable electrical and mechanical requirements.</td></tr>
</table>

Dimensions in Inches (millimeters) are subject to change without notice.

© 2013 Glenair, Inc.
U.S. CAGE Code 06324
Printed in U.S.A.

<table>
<tr><th>Test</th><th>Performance Specifications</th></tr>
<tr><td>Physical Shock</td><td>(meets MIL-C-38999, paragraph 3.27)
No loosening of parts, cracking or other deleterious results hindering further part operation after 300 G’s in each of 3 mutually perpendicular planes.</td></tr>
<tr><td>Fluid Compatibility</td><td>(meets MIL-DTL-38999, paragraph 3.33)
Designed to function in all fluids encountered in any modern military or aerospace environment</td></tr>
<tr><td>Fluid Immersion</td><td>(meets MIL-DTL-38999, paragraph 3.31)
<table>
<tr><th>Frequency (MHz)</th><th>Classes H, K, and Y</th></tr>
<tr><td>100</td><td>80</td></tr>
<tr><td>200</td><td>75</td></tr>
<tr><td>300</td><td>73</td></tr>
<tr><td>400</td><td>71</td></tr>
<tr><td>800</td><td>66</td></tr>
<tr><td>1,000</td><td>65</td></tr>
<tr><td>1,500</td><td>59</td></tr>
<tr><td>2,000</td><td>55</td></tr>
<tr><td>3,000</td><td>52</td></tr>
<tr><td>4,000</td><td>50</td></tr>
<tr><td>6,000</td><td>48</td></tr>
<tr><td>10,000</td><td>45</td></tr>
</table></td></tr>
<tr><td>High Impact Shock</td><td>(meets MIL-C-38999, paragraph 3.27)
Mated connectors, wired with MIL-C-915/60 or /63 cable and equipped with straight environmentally sealed backshells, withstand high impact shock per MIL-S-901.</td></tr>
<tr><td>Vibration</td><td>(meets MIL-C-38999, paragraph 3.26)
There shall be no electrical discontinuity and there shall be no disengagement of the mated connectors, backing off of the coupling mechanism, evidence of cracking, breaking, or loosening of parts.</td></tr>
<tr><td>Fungus</td><td>(meets MIL-C-38999, paragraph 4.2.2)
Materials used in the construction of these connectors shall be fungus inert per certification of method 508.4 of MIL-STD-810</td></tr>
<tr><td>Corrosion</td><td>(meets MIL-C-38999, paragraph 3.16)
When tested in accordance with EIA-364-26, meets appropriate electrical and mechanical requirements and shows no exposure of base metal after 500 hours of salt spray</td></tr>
<tr><td>Mating / Unmating Forces</td><td>(meets MIL-C-38999, paragraph 3.10)
The coupling torque for mating and unmating of the counterpart connectors and protective covers shall meet the requirements of the table shown below.</td></tr>
</table>

Dimensions in Inches (millimeters) are subject to change without notice.

© 2013 Glenair, Inc.

MIL-DTL-38999
Connector Performance Specifications

Test	Performance Specifications
Durability	*(meets MIL-C-38999, paragraph 3.11)* No electrical or mechanical defects after 500 cycles of engagement and disengagement
Insert Retention	*(meets MIL-C-38999, paragraph 3.15)* Unmated connectors shall retain their inserts in their proper location in the shell and there shall be no evidence of cracking, breaking, separation from the shell, or loosening of parts.
Contact Retention	*(meets MIL-C-38999, paragraph 3.23)* The axial displacement of the contact shall not exceed .012 inch (0.30 mm). No damage to contacts or inserts shall result.
Coupling Pin Strength	*(meets MIL-C-38999, paragraph 3.20)* **Applicable to series I and II only** Bayonet coupling pins shall withstand a load of 50 +5, -0 pounds without displacement or perceptible loosening of coupling pins.
Contact Engagement and Disengagement Forces	*(meets MIL-C-38999, paragraph 3.16)* **Applicable to hermetic connectors with sockets only** Contact engagement and separating forces shall be within the limits specified in **SAE-AS39029.**
Resistance to Probe Damage	*(meets MIL-C-38999, paragraph 3.42)* **Applicable to hermetic connectors with sockets only** Contacts shall withstand the bending moment and depth of test probe insertion without evidence of damage that would interfere with the mechanical or electrical performance.
EMI Ground Spring Forces	*(meets MIL-C-38999, paragraph 3.30)* The forces necessary to engage and separate EMI plugs with receptacle shells shall be within the values specified in the table shown below:

Shell size	Axial force for Series I, II, and III				Axial force for Series IV			
	Maximum	Minimum	Maximum	Minimum				
	Pounds	Newtons	Pounds	Newton	Pounds	Newtons	Pounds	Newtons
8/9	25	111	0.5	2	-	-	-	-
10/11	25	111	0.5	2	5	22.3	0.3	1.3
12/13	30	133	0.5	2	5	22.3	0.3	1.3
14/15	30	133	0.5	2	6	26.7	0.4	1.8
16/17	35	156	0.5	2	7	31.1	0.4	1.8
18/19	35	156	0.5	2	8	35.6	0.5	2.2
20/21	35	156	0.5	2	9	40	0.5	2.2
22/23	35	156	0.5	2	10	44.5	0.5	2.2
24/25	35	156	0.5	2	10	44.5	0.5	2.2

Dimensions in Inches (millimeters) are subject to change without notice.

© 2013 Glenair, Inc.

MIL-DTL-38999
Contact Performance Specifications



<table>
<tr><th>Test</th><th>Performance Specifications</th></tr>
<tr><td>Current Rating</td><td>(meets MIL-C-39029, paragraph 1.3.1)
<table>
<tr><th rowspan="2">Contact Size</th><th colspan="2">Maximum Amps</th></tr>
<tr><th>Crimp</th><th>Hermetic</th></tr>
<tr><td>22D</td><td>5</td><td>3</td></tr>
<tr><td>20</td><td>7.5</td><td>5</td></tr>
<tr><td>16</td><td>13</td><td>10</td></tr>
<tr><td>12</td><td>23</td><td>17</td></tr>
<tr><td>10</td><td>33</td><td>24</td></tr>
</table></td></tr>
<tr><td>Contact Millivolt Drop</td><td>
<table>
<tr><th rowspan="2">Contact Size</th><th colspan="2">Maximum Millivolt Drop</th></tr>
<tr><th>Crimp</th><th>Hermetic</th></tr>
<tr><td>22D</td><td>73</td><td>85</td></tr>
<tr><td>20</td><td>55</td><td>60</td></tr>
<tr><td>16</td><td>49</td><td>85</td></tr>
<tr><td>12</td><td>42</td><td>82</td></tr>
<tr><td>10</td><td>33</td><td>72</td></tr>
</table></td></tr>
<tr><td>Contact Resistance at 25° C</td><td>(meets MIL-C-38999, paragraph 3.17)
Contacts in the mated condition shall meet the contact resistance requirements of the table shown below. Appropriate compensation may be made for resistance in the measured value which is due to an additional length of wire included in the measurement.
<table>
<tr><th rowspan="2">Class</th><th rowspan="2">Contact Size</th><th rowspan="2">Wire Size</th><th rowspan="2">Test Amperes</th><th colspan="2">Millivolt Drop Maximum</th></tr>
<tr><th>Initial</th><th>After Conditioning</th></tr>
<tr><td rowspan="4">H, N and Y</td><td>12</td><td>12</td><td>17</td><td>85</td><td>100</td></tr>
<tr><td>16</td><td>16</td><td>10</td><td>85</td><td>100</td></tr>
<tr><td>20</td><td>20</td><td>5</td><td>60</td><td>75</td></tr>
<tr><td>22D</td><td>22</td><td>3</td><td>85</td><td>95</td></tr>
</table></td></tr>
</table>

MIL-DTL-38999 CONTACT MATERIALS AND SPECIFICATIONS

Component	Material	Notes
Pin Contact	Beryllium copper alloy per ASTM B197, 50 microinches gold plated per ASTM B488 Type 3 Code C Class 1,27 over nickel plate per QQ-N-290 Class 2, 50-100 microinches	Approved for Space Flight
Pin Contact, Hermetic	Nickel-iron alloy per ASTM F30 (Alloy 52),50 microinches gold plated per ASTM B488 Type 3 Code C Class 1,27 over nickel plate per QQ-N-290 Class 2, 50-100 microinches	Ferromagnetic material.
Socket Contact	Beryllium copper alloy per ASTM B197, 50 microinches gold plated per ASTM B488 Type 3 Code C Class 1,27 over nickel plate per QQ-N-290 Class 2, 50-100 microinches.	Approved for Space Flight
Socket Contact Hood	Stainless steel, passivated per AMS-QQ-P-35	Approved for Space Flight

Dimensions in Inches (millimeters) are subject to change without notice.

© 2013 Glenair, Inc.
U.S. CAGE Code 06324
Printed in U.S.A.

MIL-DTL-38999 Series I and II
Alternate Keyway Positions

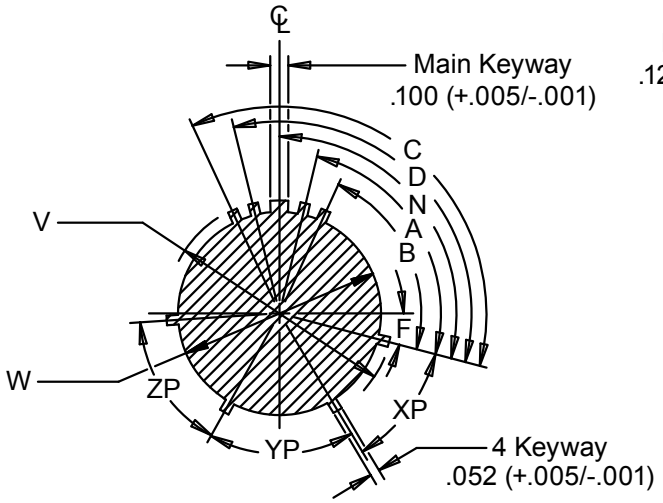

Plugs

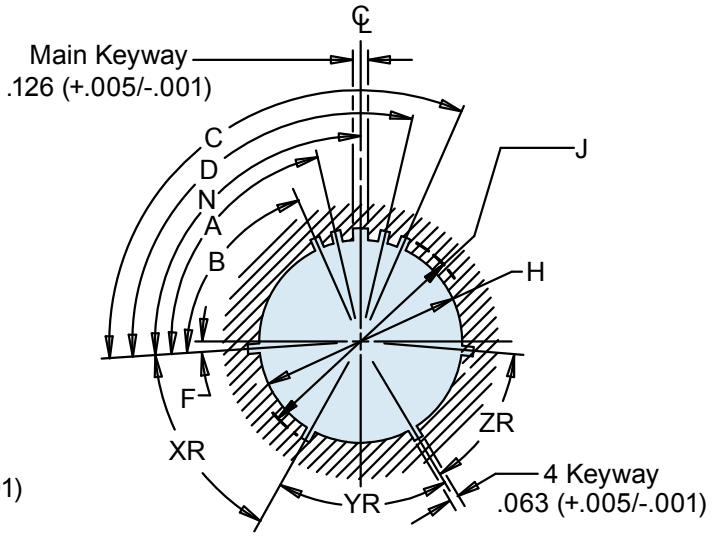

Receptacles

SERIES I ALTERNATE KEY POLARIZATION									
Shell Size	**F**	**Normal Rotation**				**Letter Designation**			
		N	**XR XP**	**YR YP**	**ZR ZP**	**A**	**B**	**C**	**D**
9	5°	95°	45°	88°	27°	77°	---	---	113°
11	5°	95°	45°	88°	27°	81°	67°	123°	109°
13	5°	95°	45°	88°	27°	75°	63°	127°	115°
15	5°	95°	45°	88°	27°	74°	61°	129°	116°
17	5°	95°	45°	88°	27°	77°	65°	125°	113°
19	5°	95°	45°	88°	27°	77°	65°	125°	113°
21	5°	95°	45°	88°	27°	77°	65°	125°	113°
23	5°	95°	45°	88°	27°	80°	69°	121°	110°
25	5°	95°	45°	88°	27°	80°	69°	121°	110°

SERIES II ALTERNATE KEY POLARIZATION									
Shell Size	**F**	**Normal Rotation**				**Letter Designation**			
		N	**XR XP**	**YR YP**	**ZR ZP**	**A**	**B**	**C**	**D**
8	10°	100°	28°	100°	37°	82°	---	---	118°
10	10°	100°	28°	100°	37°	86°	72°	128°	114°
12	10°	100°	28°	100°	37°	80°	68°	132°	120°
14	10°	100°	28°	100°	37°	79°	66°	134°	121°
16	10°	100°	28°	100°	37°	82°	70°	130°	118°
18	10°	100°	28°	100°	37°	82°	70°	130°	118°
20	10°	100°	28°	100°	37°	82°	70°	130°	118°
22	10°	100°	28°	100°	37°	85°	74°	126°	115°
24	10°	100°	28°	100°	37°	85°	74°	126°	115°

Dimensions in Inches (millimeters) are subject to change without notice.

© 2013 Glenair, Inc.

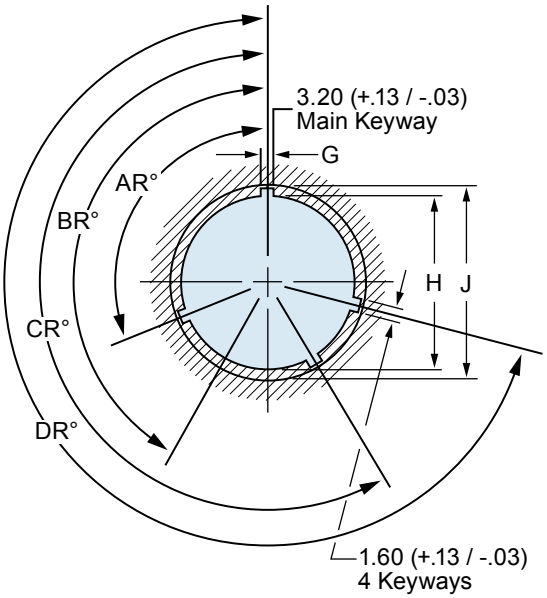

Receptacles

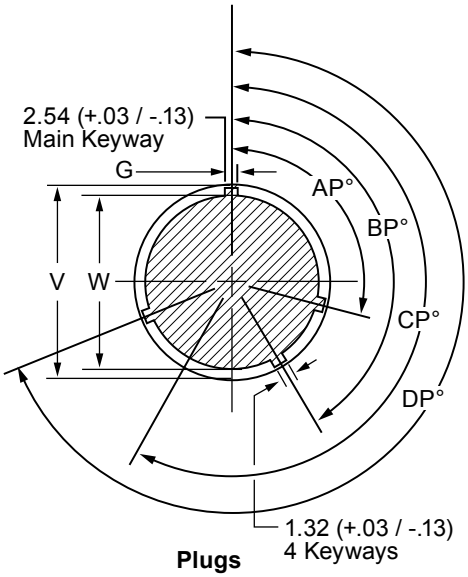

Plugs

SERIES III ALTERNATE KEY POLARIZATION					
Shell Size	**Key and Keyway Arrangement Identification Letter**	**AR° or AP° BSC**	**BR° or BP° BSC**	**CR° or CP° BSC**	**DR° or DP° BSC**
9	N	105	140	215	265
	A	102	132	248	320
	B	80	118	230	312
	C	35	140	205	275
	D	64	155	234	304
	E	91	131	197	240
11 13 and 15	N	95	141	208	236
	A	113	156	182	292
	B	90	145	195	252
	C	53	156	220	255
	D	119	146	176	298
	E	51	141	184	242
17 and 19	N	80	142	196	293
	A	135	170	200	310
	B	49	169	200	244
	C	66	140	200	257
	D	62	145	180	280
	E	79	153	197	272
21 23 and 25	N	80	142	196	293
	A	135	170	200	310
	B	49	169	200	244
	C	66	140	200	257
	D	62	145	180	280
	E	79	153	197	272

Dimensions in Inches (millimeters) are subject to change without notice.

© 2013 Glenair, Inc.

MIL-DTL-38999 Series IV
Alternate Keyway Positions

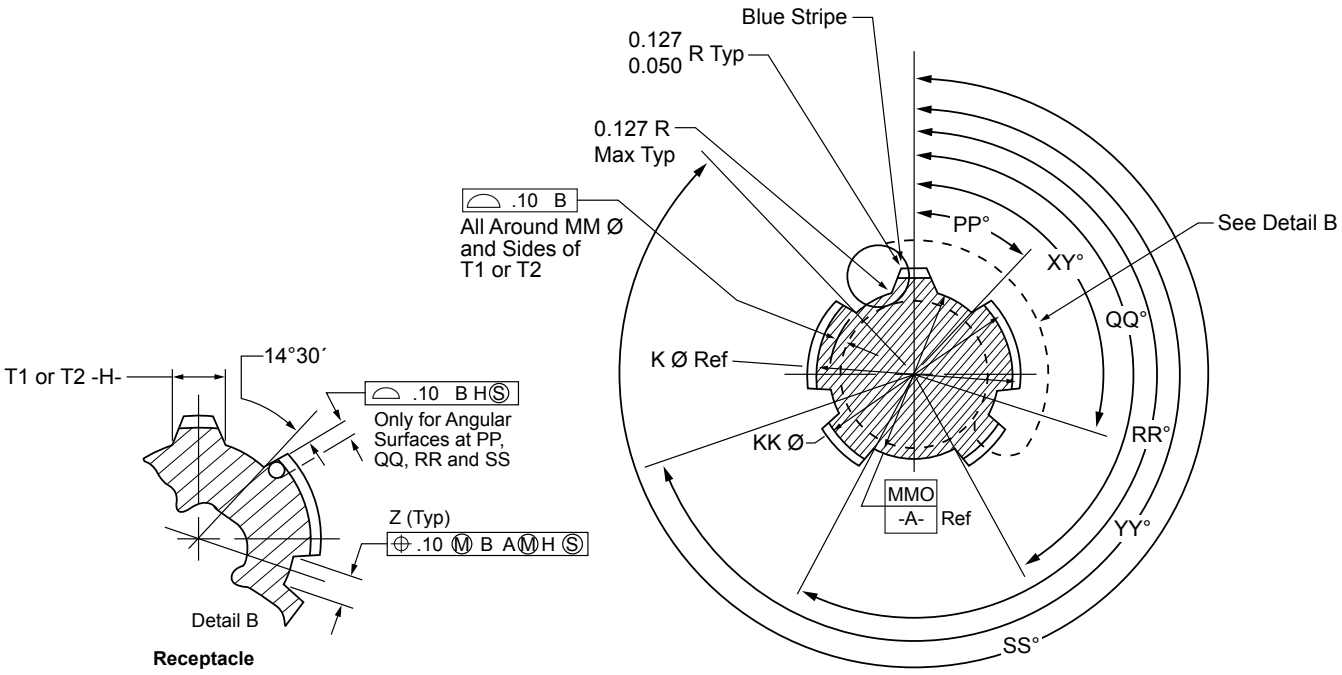

SERIES IV ALTERNATE KEY POLARIZATION										
Shell Size Code	Receptacle Main Key and Keyway Polarization								Main Key BSC	
	Shell Size	MM Dia BSC	PP°	QQ°	RR°	SS°	Z	Z²	Socket Contact T1	Pin Contact T2
B	11	13.09	44°28'	151°6'	208°54'	315°32'	1.83	2.46	1.90	2.78
C	13	16.51	44°25'	150°31'	209°29'	315°35'	1.52	2.16	1.94	2.85
D	15	19.69	44°33'	150°24'	209°36'	315°27'	2.34	3.23	2.43	3.36
E	17	22.89	44°36'	150°22'	209°38'	315°24'	2.03	2.92	2.45	3.40
F	19	25.79	44°33'	150°27'	209°33'	315°27'	2.85	3.99	2.96	3.91
G	21	28.96	44°34'	150°23'	209°37'	315°26'	2.54	3.68	2.99	3.94
H	23	32.14	44°34'	150°20'	209°40'	315°26'	3.35	4.75	3.50	4.46
J	25	35.31	44°42'	150°22'	209°388'	315°18'	3.04	4.45	3.53	4.49

Dimensions are in Millimeters

SERIES IV ALTERNATE KEY POLARIZATION										
	N	A	B	C	D	K	L	M	R	U
X° XX°	110°	100°	90°	80°	70°	120°	120°	120°	120°	0°
Y° YY°	250°	260°	270°	280°	290°	255°	265°	275°	285°	0°

Dimensions in Inches (millimeters) are subject to change without notice.

© 2013 Glenair, Inc. U.S. CAGE Code 06324 Printed in U.S.A.

Recommended Torque Values

INSTALLATION TORQUE VALUES FOR CIRCULAR ELECTRICAL CONNECTOR ACCESSORIES		
Accessory Thread Torque: ± 5 Inch Pounds		
Shell Sizes	**Group 1** **Light and Medium Duty** **AS50151 (AS31001 Series)** **MIL-DTL-26482 Series I** **MIL-DTL-26500** **MIL-DTL-27599** **MIL-DTL-38999 Series I and II** **MIL-C-81511 Series I, II, III and IV** **AS81703 Series I**	**Group 2** **Heavy Duty** **AS50151 (AS34001 Series)** **MIL-DTL-22992** **MIL-DTL-26482 Series II** **MIL-DTL-28840** **MIL-DTL-38999 Series III and IV** **AS81703 Series III** **MIL-DTL-83723 Series I, II and III**
8, 9, A	35	**56**
3, 10, 10SL, 11, B	35	**76**
7, 12, 12S, 13, C	40	**108**
14, 14S, 15, D	40	**116**
16, 16S, 17, E	40	**116**
18, 19, 27, F	40	**116**
20, 21, 37, G	80	**138**
22, 23, H	80	**136**
24, 25, 61, J	80	**136**
28, 29	120	**148**
32, 33	120	**148**
36	120	**148**
40	170	**164**
44	170	**164**
48	170	**164**

Notes: 1. Group 1 values based on 80% of MIL-DTL-85049 light duty thread sterngth.

2. Use Group 1 values for all composite connector accessories when tightened with Glenair 600-091 and 600-007 Torque Tools. Consult factory.

TORQUE VALUES FOR CABLE CLAMP SCREWS	
Torque requirements in Inch-Pounds for corrosion-resitant steel screws only	
Screw Size	**Recommended Max Torque***
2-58	**2.0**
4-40	**4.0**
6-32	**6.0**
8-32	**8.0**
10-32	**10.0**
.250-20	**15.0**

***Recommended 75-80% of max values for installation into aluminum or composite materials.**

Dimensions in Inches (millimeters) are subject to change without notice.

© 2013 Glenair, Inc.

MIL-DTL-38999 Hermetic Connectors and Environmental Mates

Hermetic	Environmental
230-003P09-35PN	D38999/26FA35SN
230-003P09-35PN	D38999/26FA35SN
230-003P15-97DN	D38999/26FD97PN
230-003P19-11DN	D38999/26FF11PN
231-100-H7Z113-35PN	MS27467E13F35S
231-100-H7Z113-35PN	MS27467E13F35S
231-100-H7Z113-35PN	MS27467E13F35S
231-100-H7Z113-35PN	MS27467E13F35S
231-100-H7Z113-35PN	MS27467E13F35S
231-100-H7Z113-35PN	MS27467E13F35S
231-100-H7Z113-35PN	MS27467E13F35S
231-100-H7Z115-35PA	MS27467E15F35SA
231-100-H7Z115-35PA	MS27467E15F35SA
231-100-H7Z115-35PA	MS27467E15F35SA
231-100-H7Z115-35PA	MS27467E15F35SA
231-100-H7Z115-35PA	MS27467E15F35SA
231-100-H7Z115-35PA	MS27467E15F35SA
231-100-H7Z117-35PN	MS27467E17F35S
231-100-H7Z117-35PN	MS27467E17F35S
231-100-H7Z117-35PN	MS27467E17F35S
231-100-H7Z117-35PN	MS27467E17F35S
231-100-H7Z117-35PN	MS27467E17F35S
231-100-H7Z117-35PN	MS27467E17F35S
231-100-H7ZL17-35PN	MS27467E17F35S
232-100-H5Z110-35PN	MS27473E10F35S
233-100-H7ZL17-06DN	D38999/26FE6PN
233-100-H7ZL17-06DN	D38999/26FE6PN
D38999/21NA35PN	D38999/26FA35SN
D38999/21NA35PN	D38999/26FA35SN
D38999/21NB35PN	D38999/26FB35SN
D38999/21ND35PA	D38999/26FD35SA
D38999/21NJ19PN	D38999/26FJ19SN
D38999/21NJ19PN	D38999/26FJ19SN
D38999/21NJ35DA	D38999/26FJ35PA
D38999/21NJ35DA	D38999/26FJ35PA
D38999/21NJ35DB	D38999/26FJ35PB
D38999/21NJ35DB	D38999/26FJ35PB
D38999/21NJ35DC	D38999/26FJ35DC
D38999/21NJ35DC	D38999/26FJ35DC
D38999/21YA98PN	D38999/26FA98SN

Hermetic	Environmental
D38999/21YA98PN	D38999/26FA98SN
D38999/21YB35XA	D38999/26FB35SA
D38999/21YB5PN	D38999/26FB5SN
D38999/21YB5PN	D38999/26FB5SN
D38999/21YB98PB	D38999/26FB98SB
D38999/21YB98PC	D38999/26FB98SC
D38999/21YB98PN	D38999/26FB98SN
D38999/21YB99PN	D38999/26FB99SN
D38999/21YC35PN	D38999/26FC35SN
D38999/21YC4PN	D38999/26FC4SN
D38999/21YC4PN	D38999/26FC4SN
D38999/21YC4PN	D38999/26FC4SN
D38999/21YC4SN	D38999/26FC4PN
D38999/21YC4SN	D38999/26FC4PN
D38999/21YC98PA	D38999/26FC98SA
D38999/21YC98PA	D38999/26FC98SA
D38999/21YC98PA	D38999/26FC98SA
D38999/21YD5PN	D38999/26FD5SN
D38999/21YD97PA	D38999/26FD97SA
D38999/21YD97PA	D38999/26FD97SA
D38999/21YD97PN	D38999/26FD97SN
D38999/21YE6XN	D38999/26FE6SN
D38999/21YG16PN	D38999/26FG16SN
D38999/21YG39PN	D38999/26FG39SN
D38999/23NA35PN	D38999/26FA35SN
D38999/23NB5SN	D38999/26FB5PN
D38999/23ND35PA	D38999/26FD35SA
D38999/23ND97DN	D38999/26FD97PN
D38999/23NF11DN	D38999/26FF11PN
D38999/23NG16PN	D38999/26FG16SN
D38999/23NG16PN	D38999/26FG16SN
D38999/23YA35PN	D38999/26FA35SN
D38999/23YA35PN	D38999/26FA35SN
D38999/23YA35PN	D38999/26FA35SN
D38999/23YB35CN	D38999/26FB35SN
D38999/23YB35PA	D38999/26FB35SA
D38999/23YB35PN	D38999/26FB35SN
D38999/23YB35PN	D38999/26FB35SN
D38999/23YB35PN	D38999/26FB35SN
D38999/23YB35SN	D38999/26FB35PN

Dimensions in Inches (millimeters) are subject to change without notice.

© 2013 Glenair, Inc.

Hermetic	Environmental
D38999/23YB35SN	D38999/26FB35PN
D38999/23YB35SN	D38999/26FB35PN
D38999/23YB98PN	D38999/26FB98SN
D38999/23YC35PC	D38999/26FC35SC
D38999/23YC35PN	D38999/26FC35SN
D38999/23YC35SB	D38999/26FC35PB
D38999/23YC35SB	D38999/26FC35PB
D38999/23YC35SB	D38999/26FC35PB
D38999/23YC35SN	D38999/26FC35PN
D38999/23YC35SN	D38999/26FC35PN
D38999/23YC4PN	D38999/26FC4SN
D38999/23YC98PN	D38999/26FC98SN
D38999/23YC98PN	D38999/26FC98SN
D38999/23YC98PN	D38999/26FC98SN
D38999/23YC98PN	D38999/26FC98SN
D38999/23YE26SA	D38999/26FE26PA
D38999/23YE6SN	D38999/26FE6PN
D38999/23YG41CN	D38999/26FG41SN
D38999/23YH35CN	D38999/26FH35SN
D38999/23YH35PA	D38999/26FH35SA
D38999/23YH35PA	D38999/26FH35SA
D38999/23YJ29SN	D38999/26FJ29PN
D38999/23YJ29SN	D38999/26FJ29PN
D38999/25YH35PN	D38999/26FH35SN
D38999/48YC35PN	D38999/46FC35SN
MS27469Y23N35C	MS27467E23F35S
MS27470Y11D35S	MS27467E11F35P
MS27470Y15E35PA	MS27467E15F35SA
MS27470Y23D21P	MS27467E23F21S
MS27471Y11E35P	MS27467E11F35S
MS27471Y11E35P	MS27467E11F35S
MS27471Y13D98PB	MS27467E13F98SB
MS27475Y10E35P	MS27473E10F35S
MS27477Y14E18PB	MS27473E14F18SB
MS27477Y14N18S	MS27473E14F18P
MS27478Y10E35P	MS27473E10F35S
MS27478Y10N35C	MS27473E10F35S
MS27478Y10N35C	MS27473E10F35S
MS27478Y18N35P	MS27473E18F35S

© 2013 Glenair, Inc.

MS27469
Wall Mount Hermetic Receptacle
MIL-DTL-38999 Series I

How To Order: *MS*

Shell Style
MS27469 - *Wall Mount, Series I*

Connector Material / Finish
D - Carbon Steel - Fused Tin Finish
E - Stainless Steel - Passivate Finish
N - Stainless Steel - Nickel Finish

Contact Termination
P - Pin, Solder Cup
X - Pin, Eyelet
C - Pin, PCB Flex Feedthrough
S - Socket, Solder Cup
Z - Socket, Eyelet
D - Socket, PCB Flex Feedthrough

MS27469	Y	11	N	35	P	A

Class
Y- Hermetic

Shell Size
9,11,13,15,17,19,21,23,25

Insert Arrangement
MIL-DTL-38999 Series I Hermetic Inserts Per MIL-STD-1560;
See Pages B-2 - B-4

Alternate Key Position
A, B, C, D
(Omit for Normal)

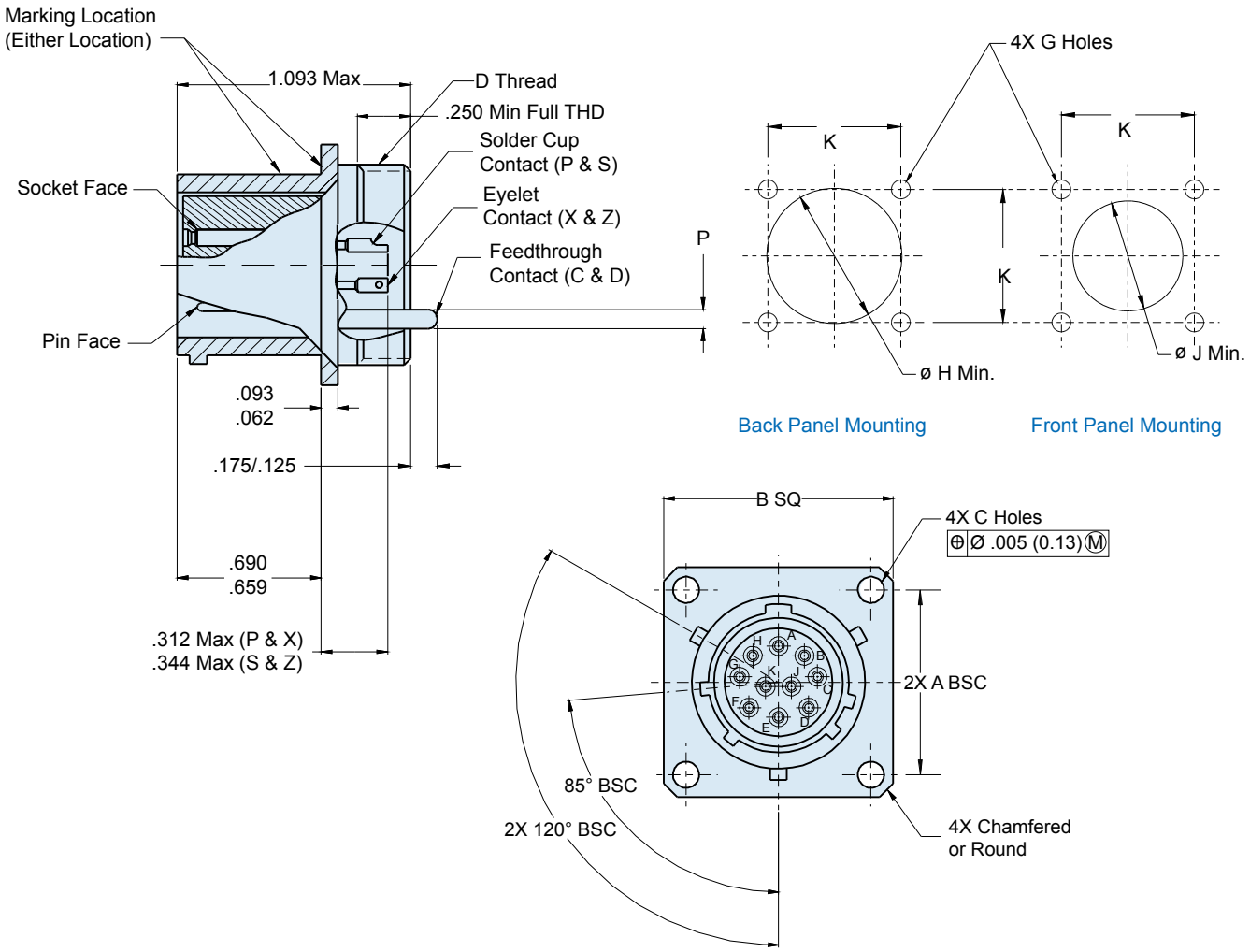

Dimensions in Inches (millimeters) are subject to change without notice.

© 2013 Glenair, Inc.

231-100-H0
Wall Mount Hermetic Receptacle
MIL-DTL-38999 Series I Type

How To Order: *Commercial*

Connector Series
231 - Series I Type

Shell Style
H0 - Hermetic Wall Mount

Shell Size
09,11,13,15,17,19,21,23,25

Contact Termination
P - Pin, Solder Cup
X - Pin, Eyelet
C - Pin, PCB
S - Socket, Solder Cup
Z - Socket, Eyelet
D - Socket, PCB Flex Feedthrough

231	-	100	-	H0	Z1	11	-	35	P	N

Connector Type
100 - Hermetic Receptacle

Connector Material / Finish
ZL - CRES, Nickel
Z1 - CRES, Passivated
FT - Carbon Steel, Fused Tin

Insert Arrangement
Per MIL-STD-1560;
See Pages B-2 - B-4

Alternate Key Position
A, B, C, D,
(*N* = Normal)

TABLE I: CONNECTOR DIMENSIONS

SHELL SIZE	A BSC	B SQ ±.016(0.4)	ø C HOLES	D THREADS
9/09	.719(18.3)	.938(23.8)	.133(3.4) .123(3.1)	.6875-24 UNEF-2A
11	.812(20.6)	1.031(26.2)	.133(3.4) .123(3.1)	.8125-20 UNEF-2A
13	.906(23.0)	1.125(28.6)	.133(3.4) .123(3.1)	.9375-20 UNEF-2A
15	.969(24.6)	1.219(31.0)	.133(3.4) .123(3.1)	1.0625-18 UNEF-2A
17	1.062(27.0)	1.312(33.3)	.133(3.4) .123(3.1)	1.1875-18 UNEF-2A
19	1.156(29.4)	1.438(36.5)	.133(3.4) .123(3.1)	1.3125-18 UNEF-2A
21	1.250(31.8)	1.562(39.7)	.133(3.4) .123(3.1)	1.4375-10 UNEF-2A
23	1.375(34.9)	1.688(42.9)	.157(4.0) .142(3.6)	1.5625-18 UNEF-2A
25	1.500(38.1)	1.812(46.0)	.157(4.0) .142(3.6)	1.6875-18 UNEF-2A

TABLE I (CONTINUED): CONNECTOR DIMENSIONS

SHELL SIZE	ø G HOLES ±.005(0.1)	ø H MIN	ø J MIN	K ±.005(0.1)
9/09	.128(3.3)	.656(16.7)	.697(17.7)	.719(18.3)
11	.128(3.3)	.796(20.2)	.822(20.9)	.812(20.6)
13	.128(3.3)	.921(23.4)	.947(24.1)	.906(23.0)
15	.128(3.3)	1.047(26.6)	1.072(27.2)	.968(24.6)
17	.128(3.3)	1.218(30.9)	1.197(30.4)	1.062(27.0)
19	.128(3.3)	1.296(32.9)	1.322(33.6)	1.156(29.4)
21	.128(3.3)	1.421(36.1)	1.447(36.8)	1.250(31.8)
23	.154(3.9)	1.546(39.3)	1.572(39.9)	1.375(34.9)
25	.154(3.9)	1.672(42.5)	1.697(43.1)	1.500(38.1)

HERMETIC LEAK RATE MOD CODES

Designator	Required Leak Rate
–585A	1 x 10^{-10} cc Helium per second
–585B	1 x 10^{-9} cc Helium per second
–585C	1 x 10^{-8} cc Helium per second

TABLE II: CONTACT SIZE

PRINTED CIRCUIT TAIL CONFIGURATIONS
CONTACT STYLE C AND D

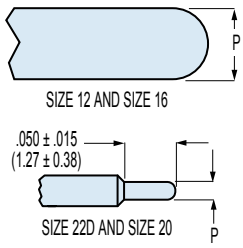

Contact Size	ø P
22D	.011 (0.28) .015 (0.38)
20	.024 (0.61) .028 (0.71)
16	.0635 (1.61) .0615 (1.56)
12	.095 (2.41) .093 (2.36)

WIRE ACCOMODATION

Contact Size	Wire Guage
22D	#22 - #28
20	#20 - #24
16	#16 - #20
12	#12 - #14

Dimensions in Inches (millimeters) are subject to change without notice.

© 2013 Glenair, Inc.
U.S. CAGE Code 06324
Printed in U.S.A.

MS27470
Jam Nut Mount Hermetic Receptacle
MIL-DTL-38999 Series I

How To Order: *MS*

Shell Style
MS27470 - *Jam Nut Mount, Series I*

Connector Material / Finish
D - Carbon Steel - Fused Tin Finish
E - Stainless Steel - Passivate Finish
N - Stainless Steel - Nickel Finish

Contact Termination
P - Pin, Solder Cup
X - Pin, Eyelet
C - Pin, PCB Flex Feedthrough
S - Socket, Solder Cup
Z - Socket, Eyelet
D - Socket, PCB Flex Feedthrough

MS27470	Y	11	N	35	P	A

Class
Y- Hermetic

Shell Size
9,11,13,15,17,19,21,23,25

Insert Arrangement
MIL-DTL-38999 Series I Hermetic Inserts Per MIL-STD-1560;
See Pages B-2 - B-4

Alternate Key Position
A, B, C, D
(Omit for Normal)

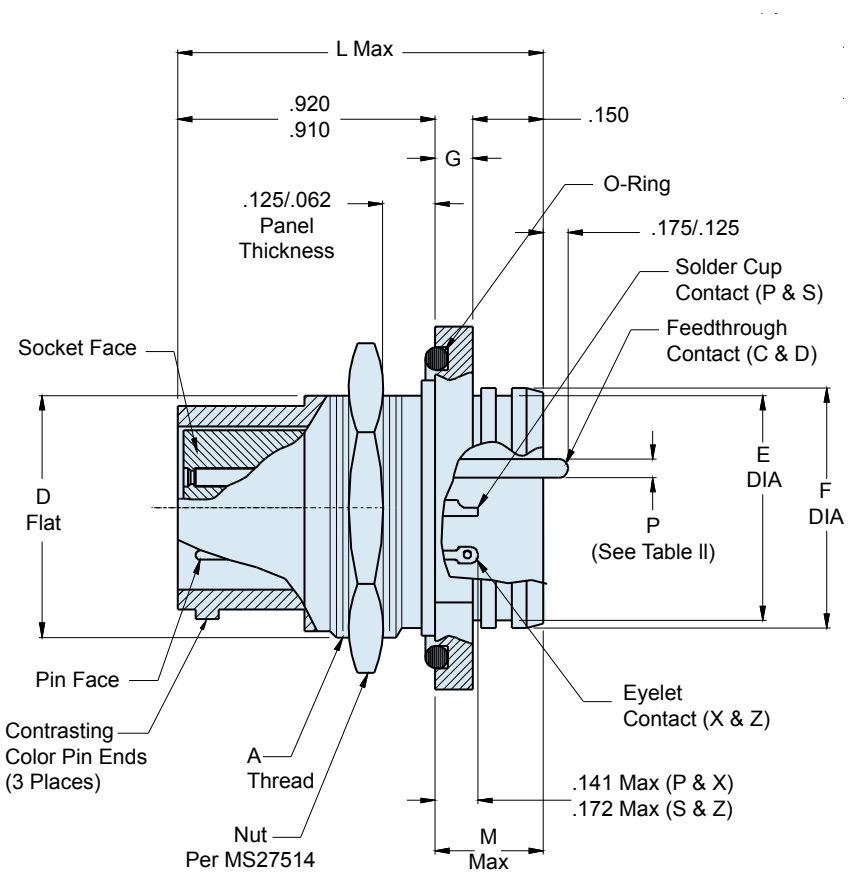

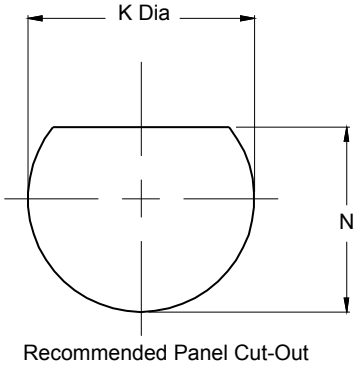

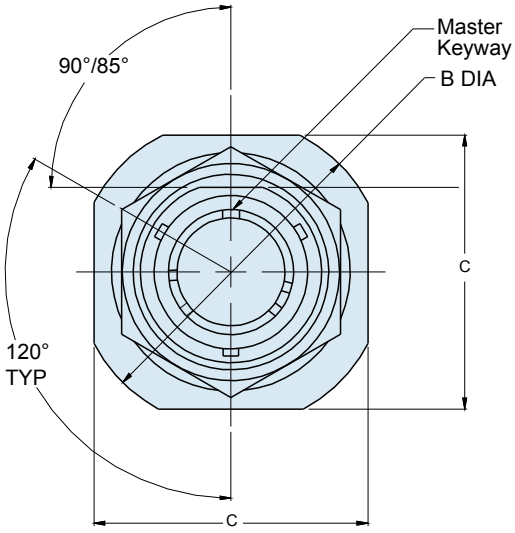

Dimensions in Inches (millimeters) are subject to change without notice.

© 2013 Glenair, Inc.
U.S. CAGE Code 06324
Printed in U.S.A.

231-100-H7
Jam Nut Mount Hermetic Receptacle
MIL-DTL-38999 Series I Type

How To Order: *Commercial*

Connector Series
231 - Series I Type

Shell Style
H7 - Hermetic Jam Nut Mount

Shell Size
09,11,13,15,17,19,21,23,25

Contact Termination
P - Pin, Solder Cup *S - Socket, Solder Cup*
X - Pin, Eyelet *Z - Socket, Eyelet*
C - Pin, PCB *D - Socket, PCB*

231 - 100 - H7 Z1 11 - 35 P N

Connector Type
100 - Hermetic Receptacle

Connector Material / Finish
ZL - CRES, Nickel
Z1 - CRES, Passivated
FT - Carbon Steel, Fused Tin

Insert Arrangement
Per MIL-STD-1560;
See Pages B-2 - B-4

Alternate Key Position
A, B, C, D,
(*N* = Normal)

TABLE I: CONNECTOR DIMENSIONS

SHELL SIZE	A THREAD CLASS 2A	B DIA ±.016(0.4)	C ±.016(0.4)	D FLAT ±.005(0.1)	E DIA ±.011(0.3)	F DIA ±.005(0.1)
9/09	.6875-24 UNEF	1.188(30.2)	1.062(27.0)	.65(16.5)	.602(15.3)	.648(16.5)
11	.8125-20 UNEF	1.375(34.9)	1.25(31.8)	.75(19.1)	.726(18.4)	.772(19.6)
13	1.000-20 UNEF	1.5(38.1)	1.375(34.9)	.937(23.8)	.852(21.6)	.898(22.8)
15	1.125-18 UNEF	1.625(41.3)	1.5(38.1)	1.061(26.9)	.978(24.8)	1.024(26.0)
17	1.250-18 UNEF	1.75(44.5)	1.625(41.3)	1.186(30.1)	1.102(28.0)	1.148(29.2)
19	1.375-18 UNEF	1.938(49.2)	1.812(46.0)	1.311(33.3)	1.228(31.2)	1.274(32.4)
21	1.500-18 UNEF	2.062(52.4)	1.938(49.2)	1.436(36.5)	1.352(34.3)	1.398(35.5)
23	1.625-18 UNEF	2.188(55.6)	2.062(52.4)	1.561(39.6)	1.478(37.5)	1.524(38.7)
25	1.750-18 UNS	2.312(58.7)	2.188(55.6)	1.686(42.8)	1.602(40.7)	1.648(41.9)

TABLE I (CONTINUED): CONNECTOR DIMENSIONS

SHELL SIZE	G ±.016(0.4)	K DIA ±.005 (0.1)	L MAX	M MAX	N ± .005 (0.1)
9/09	.109 (2.8)	.693 (17.60)	1.200 (30.5)	.280 (7.1)	.657 (16.70)
11	.109 (2.8)	.825 (20.96)	1.200 (30.5)	.280 (7.1)	.771 (19.59)
13	.109 (2.8)	1.010 (25.65)	1.200 (30.5)	.280 (7.1)	.955 (24.26)
15	.109 (2.8)	1.135 (28.83)	1.200 (30.5)	.280 (7.1)	1.085 (27.56)
17	.109 (2.8)	1.260 (32.01)	1.200 (30.5)	.280 (7.1)	1.210 (30.73)
19	.140 (3.6)	1.385 (35.18)	1.231 (31.3)	.311 (7.9)	1.335 (33.91)
21	.140 (3.6)	1.510 (38.35)	1.231 (31.3)	.311 (7.9)	1.460 (37.08)
23	.140 (3.6)	1.635 (41.53)	1.231 (31.3)	.311 (7.9)	1.585 (40.26)
25	.140 (3.6)	1.760 (44.70)	1.231 (31.3)	.311 (7.9)	1.710 (43.43)

TABLE II: CONTACT SIZE

PRINTED CIRCUIT TAIL CONFIGURATIONS
CONTACT STYLE C AND D



SIZE 12 AND SIZE 16

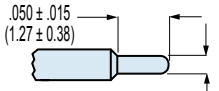

SIZE 22D AND SIZE 20

Contact Size	ø P
22D	.011 (0.28) .015 (0.38)
20	.024 (0.61) .028 (0.71)
16	.0635 (1.61) .0615 (1.56)
12	.095 (2.41) .093 (2.36)

HERMETIC LEAK RATE MOD CODES

Designator	Required Leak Rate
–585A	1 x 10^{-10} cc Helium per second
–585B	1 x 10^{-9} cc Helium per second
–585C	1 x 10^{-8} cc Helium per second

WIRE ACCOMODATION

Contact Size	Wire Guage
22D	#22 - #28
20	#20 - #24
16	#16 - #20
12	#12 - #14

Dimensions in Inches (millimeters) are subject to change without notice.

© 2013 Glenair, Inc.
U.S. CAGE Code 06324
Printed in U.S.A.

MS27471
Solder Mount Hermetic Receptacle
MIL-DTL-38999 Series I

How To Order: *MS*

Shell Style
MS27471 - Solder Mount, Series I

Connector Material / Finish
D - Carbon Steel - Fused Tin Finish
E - Stainless Steel - Passivate Finish
N - Stainless Steel - Nickel Finish

Contact Termination
P - Pin, Solder Cup
X - Pin, Eyelet
C - Pin, PCB Flex Feedthrough
S - Socket, Solder Cup
Z - Socket, Eyelet
D - Socket, PCB Flex Feedthrough

MS27471	Y	11	N	35	P	A

Class
Y- Hermetic

Shell Size
9,11,13,15,17,19,21,23,25

Insert Arrangement
MIL-DTL-38999 Series I Hermetic Inserts Per MIL-STD-1560; See Pages B-2 - B-4

Alternate Key Position
A, B, C, D (Omit for Normal)

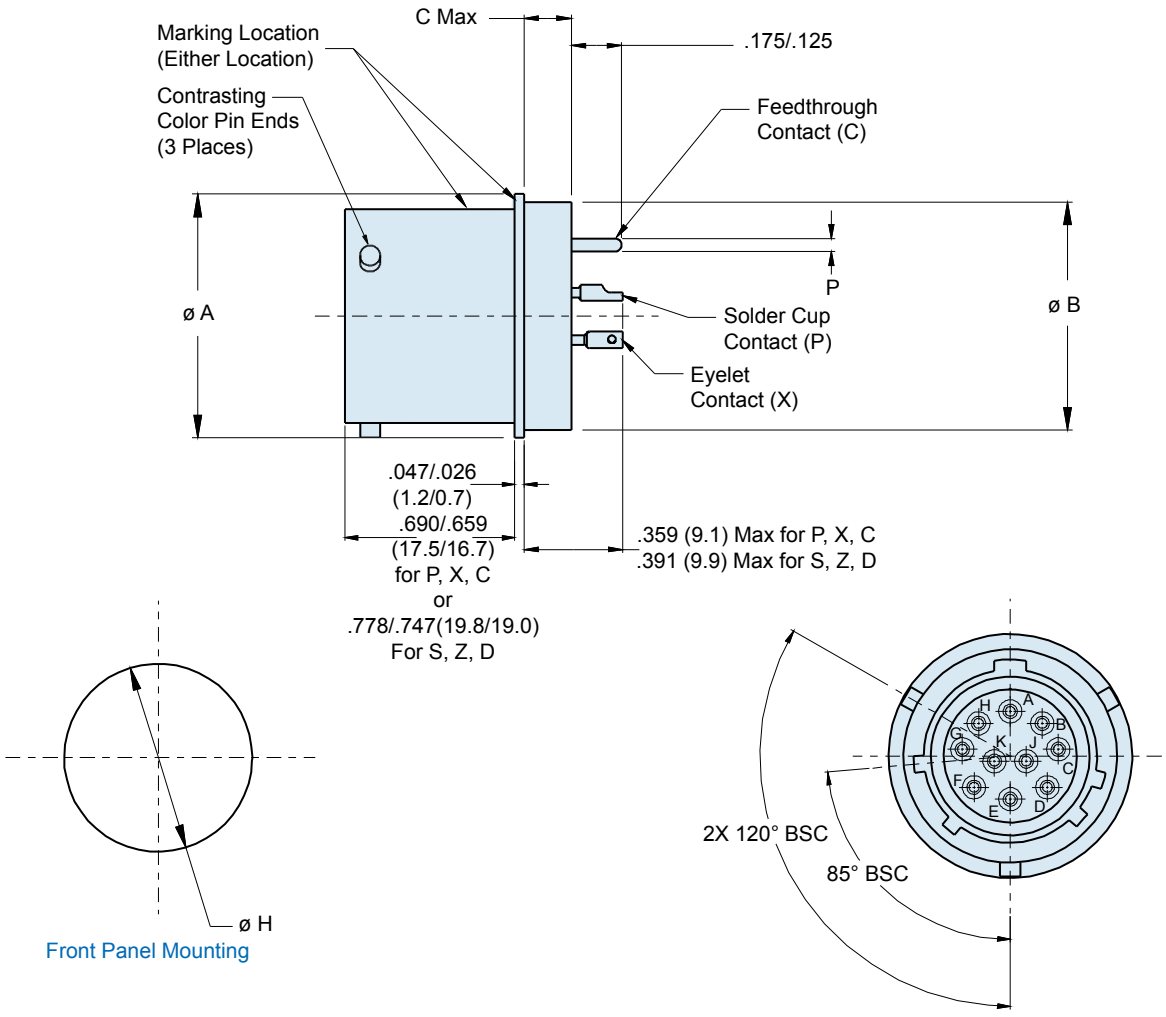

Dimensions in Inches (millimeters) are subject to change without notice.

© 2013 Glenair, Inc.

231-100-H5
Solder Mount Hermetic Receptacle
MIL-DTL-38999 Series I Type

Glenair®

How To Order: *Commercial*

Connector Series	Shell Style	Shell Size	Contact Termination			
231 - Series I Type	H5 - Hermetic Solder Mount	09,11,13,15,17,19,21,23,25	P - Pin, Solder Cup	S - Socket, Solder Cup		
			X - Pin, Eyelet	Z - Socket, Eyelet		
			C - Pin, PCB	D - Socket, PCB		

231	-	100	-	H5	Z1	11	-	35	P	N

Connector Type
100 - Hermetic Receptacle

Connector Material / Finish
ZL - CRES, Nickel
Z1 - CRES, Passivated
FT - Carbon Steel, Fused Tin

Insert Arrangement
Per MIL-STD-1560;
See Pages B-2 - B-4

Alternate Key Position
A, B, C, D,
(*N* = Normal)

TABLE I: CONNECTOR DIMENSIONS

SHELL SIZE	ø A ±.016(0.4)	ø B	C MAX	ø H ±.005(0.1)
9/09	.750(19.1)	.673(17.1) .667(16.9)	.187(4.7)	.680(17.3)
11	.844(21.4)	.782(19.9) .776(19.7)		.789(20.0)
13	.969(24.6)	.907(23.0) .901(22.9)		.914(23.2)
15	1.094(27.8)	1.032(26.2) 1.027(26.1)		1.038(26.4)
17	1.218(30.9)	1.157(29.4) 1.151(29.2)		1.164(29.6)
19	1.312(33.3)	1.251(31.8) 1.245(31.6)		1.258(32.0)
21	1.438(36.5)	1.376(35.0) 1.370(34.8)		1.383(35.1)
23	1.563(39.7)	1.501(38.1) 1.495(38.0)	.218(5.5)	1.508(38.3)
25	1.688(42.9)	1.626(41.3) 1.620(41.1)		1.643(41.7)

TABLE II: CONTACT SIZE

PRINTED CIRCUIT TAIL CONFIGURATIONS
CONTACT STYLE C AND D

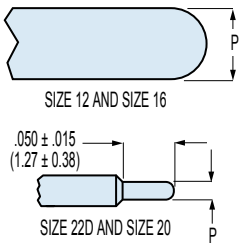

Contact Size	ø P
22D	.011 (0.28) .015 (0.38)
20	.024 (0.61) .028 (0.71)
16	.0635 (1.61) .0615 (1.56)
12	.095 (2.41) .093 (2.36)

HERMETIC LEAK RATE MOD CODES

Designator	Required Leak Rate
–585A	1 x 10^{-10} cc Helium per second
–585B	1 x 10^{-9} cc Helium per second
–585C	1 x 10^{-8} cc Helium per second

WIRE ACCOMODATION

Contact Size	Wire Guage
22D	#22 - #28
20	#20 - #24
16	#16 - #20
12	#12 - #14

Dimensions in Inches (millimeters) are subject to change without notice.

© 2013 Glenair, Inc.
U.S. CAGE Code 06324
Printed in U.S.A.

231-103-H7
Jam Nut Mount Hermetic Bulkhead Feed-Thru
MIL-DTL-38999 Series I Type

Connector Series
231 - D38999 Series I Type

Shell Style
H7 - Jam Nut Mount

Shell Size
09
11
13
15
17
19
21
23
25

Insert Arrangement
Per MIL-DTL-38999 Series I
MIL-STD-1560

Alternate Key Position
A, B, C, D
(*N* = Normal)

231	-	103	-	H7	Z1	11	-	35	P	N	-	01

Connector Type
103 - Hermetic Bulkhead Feed-Thru

Contact Termination
P - Pin on Jam Nut Side
S - Socket on Jam Nut Side

Connector Material and Finish
FT - Carbon Steel, Fused Tin
Z1 - CRES, Passivated
ZL - CRES, Nickel Finish

Panel Accomodation
01 - .0625" (Min) .125" (Max)
02 - .0625" (Min) .250" (Max)
03 - .0625" (Min) .500" (Max)

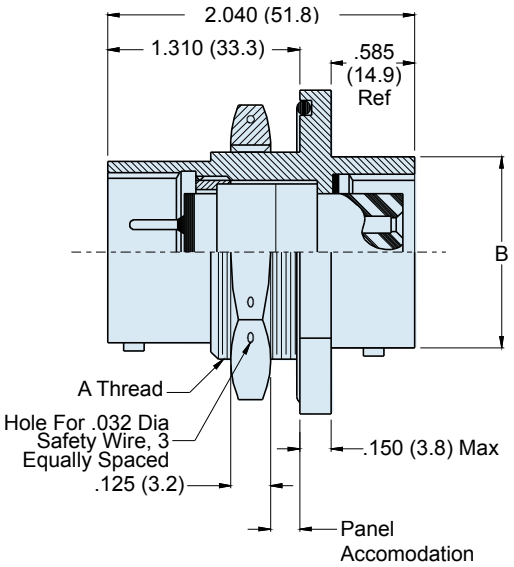

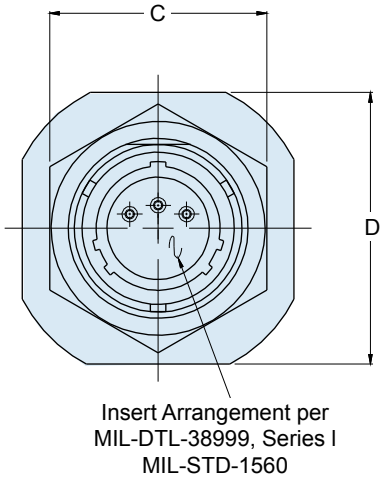

Dimensions in Inches (millimeters) are subject to change without notice.

© 2013 Glenair, Inc.

HERMETIC LEAK RATE MOD CODES	
Designator	**Required Leak Rate**
–585A	1 x 10^{-10} cc Helium per second
–585B	1 x 10^{-9} cc Helium per second
–585C	1 x 10^{-8} cc Helium per second

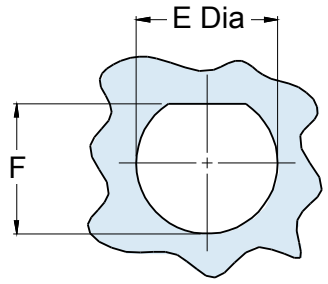

Recommended Panel Cut-Out

TABLE I: CONNECTOR DIMENSIONS						
SHELL SIZE	**A THREAD CLASS 2A**	**B DIA MAX**	**C HEX**	**D FLATS**	**E DIA ±.005 (0.1)**	**F +.000 -.005 (0-0.1)**
09	.688-24 UNEF	.573(14.6)	.875(22.2)	1.062(27.0)	.693 (17.60)	.657 (16.70)
11	0.812-20 UNEF	.701(17.8)	1.000(25.4)	1.250(31.8)	.825 (20.96)	.771 (19.59)
13	1.000-20 UNEF	.851(21.6)	1.188(30.2)	1.375(34.9)	1.010 (25.65)	.955 (24.26)
15	1.125-18 UNEF	.976(24.8)	1.312(33.3)	1.500(38.1)	1.135 (28.83)	1.085 (27.56)
17	1.250-18 UNEF	1.101(28.0)	1.438(36.5)	1.625(41.3)	1.260 (32.01)	1.210 (30.73)
19	1.375-18 UNEF	1.208(30.7)	1.562(39.7)	1.812(46.0)	1.385 (35.18)	1.335 (33.91)
21	1.500-18 UNEF	1.333(33.9)	1.688(42.9)	1.938(49.2)	1.510 (38.35)	1.460 (37.08)
23	1.625-18 UNEF	1.458(37.0)	1.812(46.0)	2.062(52.4)	1.635 (41.53)	1.585 (40.26)
25	1.750-18 UNS	1.583(40.2)	2.000(50.8)	2.188(55.6)	1.760 (44.70)	1.710 (43.43)

APPLICATION NOTES

1. Power to a given contact on one end will result in power to contact directly opposite, regardless of identification letter.
2. Hermeticity = less than 1 x 10^{-7} cc/sec at one atmosphere. Not for use in liquid atmosphere.
3. Material/finish:
   Shell, nut – CRES/passivated, carbon steel/fused tin or CRES/nickel per QQ-N-290.
   Contacts – Gold Plated. Pin: alloy 52; Skt.: copper alloy
   Insulator – fused vitreous glass/N.A.
   Seals – fluorosilicone rubber/N.A.
4. Metric dimensions (mm) are indicated in parentheses.

Dimensions in Inches (millimeters) are subject to change without notice.

© 2013 Glenair, Inc.

231-103-H9
Sav-Con® Jam Nut Mount Hermetic Bulkhead Feed-Thru
MIL-DTL-38999 Series I Type

Connector Series
231 - D38999 Series I Type

Shell Style
H9 - Jam Nut Mount

Shell Size
09
11
13
15
17
19
21
23
25

Insert Arrangement
Per MIL-DTL-38999 Series I
MIL-STD-1560

Alternate Key Position
A, B, C, D
(*N* = Normal)

231	-	103	-	H9	Z1	11	-	35	P	N	-	01

Connector Type
103 - Hermetic Bulkhead Feed-Thru

Contact Termination
P - Pin on Plug End
S - Socket on Plug End

Connector Material and Finish
Z1 - CRES, Passivated
ZL - CRES, Nickel Finish

Panel Accomodation
Per Table II

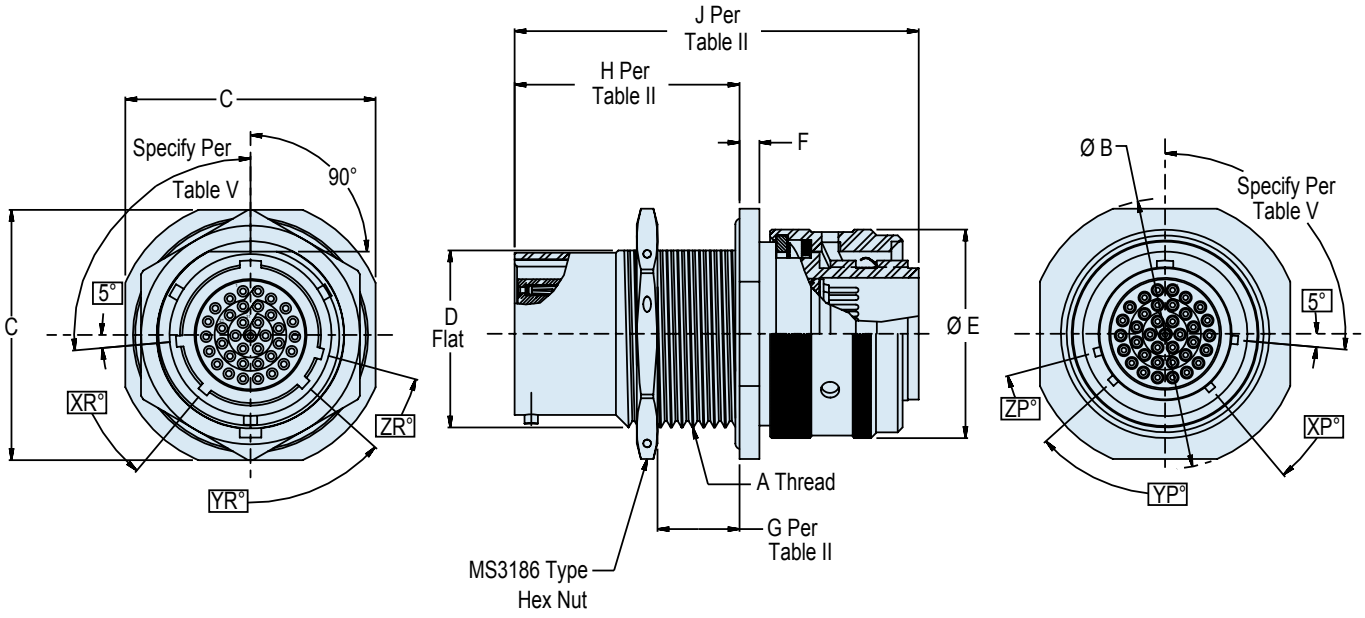

Dimensions in Inches (millimeters) are subject to change without notice.

© 2013 Glenair, Inc.
U.S. CAGE Code 06324
Printed in U.S.A.

231-103-H9
Sav-Con® Jam Nut Mount Hermetic Bulkhead Feed-Thru
MIL-DTL-38999 Series I Type

Glenair®

TABLE I: CONNECTOR DIMENSIONS

SHELL SIZE	A THREAD CLASS 2A	B DIA MAX	C A/F	D FLAT	E DIA MAX	F	K DIA	N
09	.6875-24 UNEF	1.204/1.172 (30.58/29.77)	1.078/1.046 (27.38/26.57)	.655/.645 (16.64/16.38)	.859 (21.82)	.125/.093 (3.18/2.36)	.703/.693 (17.86/17.60)	.657/.655 (16.69/16.64)
11	.8125-20 UNEF	1.391/1.359 (35.33/34.52)	1.299/1.234 (32.99/31.34)	.755/.745 (19.18/18.92)	.984 (24.99)	.125/.093 (3.18/2.36)	.835/.825 (21.21/20.96)	.771/.769 (19.58/19.53)
13	1.000-20 UNEF	1.516/1.484 (38.51/37.69)	1.391/1.359 (35.33/34.52)	.942/.932 (23.93/23.67)	1.156 (29.36)	.125/.093 (3.18/2.36)	1.020/1.010 (25.91/25.65)	.955/.953 (24.26/24.21)
15	1.125-18 UNEF	1.641/1.609 (41.68/40.87)	1.516/1.484 (38.51/37.69)	1.066/1.056 (27.08/26.82)	1.281 (32.54)	.125/.093 (3.18/2.36)	1.145/1.135 (29.08/28.83)	1.085/1.083 (27.56/27.51)
17	1.250-18 UNEF	1.766/1.734 (44.86/44.04)	1.641/1.609 (41.68/40.87)	1.191/1.181 (30.35/30.00)	1.406 (35.71)	.125/.093 (3.18/2.36)	1.270/1.260 (32.26/32.00)	1.210/1.208 (30.73/30.68)
19	1.375-18 UNEF	1.954/1.922 (49.63/48.82)	1.828/1.796 (46.43/45.62)	1.316/1.306 (33.43/33.17)	1.516 (38.5)	.156/.124 (3.96/3.15)	1.395/1.385 (35.43/35.18)	1.335/1.333 (33.91/33.86)
21	1.500-18 UNEF	2.078/2.046 (52.78/51.97)	1.954/1.922 (49.63/48.82)	1.441/1.431 (36.60/36.35)	1.641 (41.68)	.156/.124 (3.96/3.15)	1.520/1.510 (38.61/38.35)	1.460/1.458 (37.08/37.03)
23	1.625-18 UNEF	2.204/2.172 (55.98/55.17)	2.078/2.046 (52.78/51.97)	1.566/1.556 (39.78/39.52)	1.766 (44.86)	.156/.124 (3.96/3.15)	1.645/1.635 (41.8/41.53)	1.585/1.583 (40.26/40.21)
25	1.750-18 UNS	2.328/2.296 (59.13/58.32)	2.204/2.172 (55.98/55.17)	1.691/1.681 (42.95/42.70)	1.891 (48.03)	.156/.124 (3.96/3.15)	1.770/1.760 (44.96/44.70)	1.710/1.708 (43.43/43.38)

TABLE IV: MASTER KEY/KEYWAY POSITIONS

SHELL SIZE	XP YP	YP YR	ZP ZR	N	A	B	C	D
09	45°	88°	27°	95°	77°	—	—	113°
11	45°	88°	27°	95°	81°	67°	123°	109°
13	45°	88°	27°	95°	75°	63°	127°	115°
15	45°	88°	27°	95°	74°	61°	129°	116°
17	45°	88°	27°	95°	77°	65°	125°	113°
19	45°	88°	27°	95°	77°	65°	125°	113°
21	45°	88°	27°	95°	77°	65°	125°	113°
23	45°	88°	27°	95°	80°	69°	121°	110°
25	45°	.88°	27°	95°	80°	69°	121°	110°

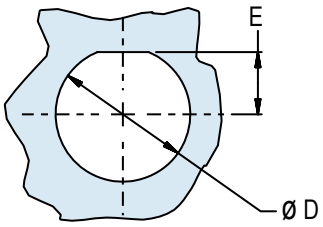

Recommended Panel Cut-out

TABLE III: DWV VOLTAGE LEVELS

SERVICE RATING	VOLTAGE AC RMS 60HZ
M	1300 VAC
I	1800 VAC
II	2300 VAC
N	1000 VAC

HERMETIC LEAK RATE MOD CODES

Designator	Required Leak Rate
–585A	1 x 10^{-10} cc Helium per second
–585B	1 x 10^{-9} cc Helium per second
–585C	1 x 10^{-8} cc Helium per second

TABLE II: DIMENSIONS

SYM	G	H	J
01	.062-.125 (1.57-3.18)	.920 MAX (23.37 MAX)	2.050 MAX (52.07 MAX)
02	.062-.250 (1.57-6.35)	1.050 MAX (26,67 MAX)	2.150 MAX (54.61 MAX)
03	.062-.500 (1.57-12.7)	1.300 MAX (33.02 MAX)	2.400 MAX (60.96 MAX)

APPLICATION NOTES

1. Material/finish:
   - Shell, jam-nut – 300 Series CRES/see P/N development.
   - Contacts, pin – Nickel-iron alloy/Gold plate.
   - Contacts, socket – Copper alloy/Gold plate.
   - Insulator, pin – Vitreous glass/N.A.
   - Insulator, sockets – Hi-grade rigid dielectric/N.A.
   - Grounding springs – Copper alloy/Gold plate.
   - O-Rings and seals – Fluorosilicone blend/N/A.
2. Assembly identified with manufacturer's name and part number, space permitting.
3. Test requirements:
   - D.W.V. – Per Table IV
   - I.R. – 5 GigOhms @ 500 VDC
   - Hermeticity – <1 x 10^{A-7} sccHe/sec @ 1 ATM differential.
4. Metric dimensions (mm) are indicated in parentheses.

Dimensions in Inches (millimeters) are subject to change without notice.

© 2013 Glenair, Inc.
U.S. CAGE Code 06324
Printed in U.S.A.

257-255
Jam Nut Mount Hermetic Receptacle
with Crimp Removable Socket Contacts, MIL-DTL-38999 Series I Type

Basic Number	Shell Size		Alternate Key Position	
257-255	Z1	9 -	35	N

Material and Finish
Z1 - CRES, Passivated

Insert Arrangement
Per MIL-STD-1560

Alternate Key Position
A, B, C, D, E
(*N* = Normal)

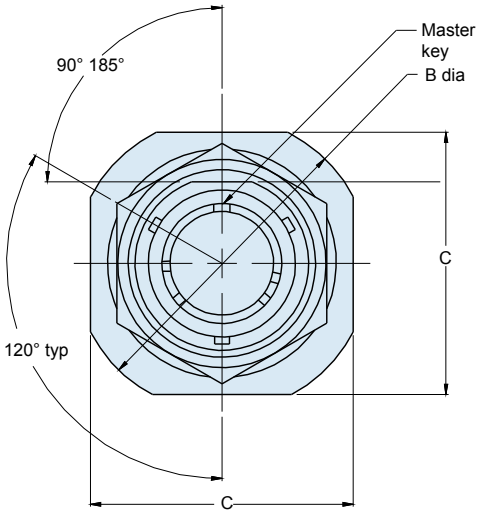

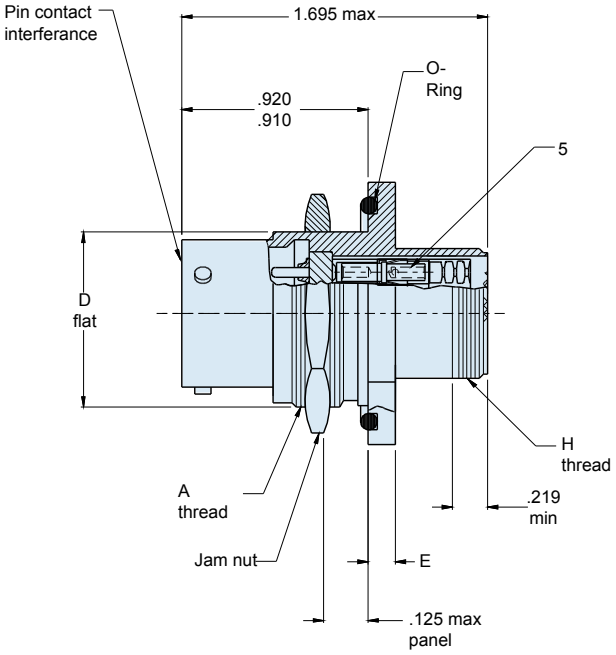

APPLICATION NOTES

1. Assembly identified with manufacturer's name and part number, space permitting.
2. Insert arrangements in accordance with MIL-STD-1560.
3. Glenair 257-255 receptacle connector is designed to mate with any QPL manufacturer's MIL-DTL-38999 Series I plug connector having the same insert arrangement & polarization.
4. Material/finish:
   Shell, jam nut—CRES/passivated
   Pin contacts—nickel-iron alloy 52/gold
   Socket contacts—copper alloy/gold
   Insulator—fused vitreous glass/N.A.
   Insulators—high grade rigid dielectric/ N.A.
   Seals—pure fluorosilicone rubber/ N.A.
5. Supplied crimp removal socket contacts conform to M39029/57
6. Metric Dimensions (mm) are indicated in parentheses.

Dimensions in Inches (millimeters) are subject to change without notice.

© 2013 Glenair, Inc.
U.S. CAGE Code 06324
Printed in U.S.A.

HERMETIC LEAK RATE MOD CODES	
Designator	**Required Leak Rate**
–585A	1 x 10^{-10} cc Helium per second
–585B	1 x 10^{-9} cc Helium per second
–585C	1 x 10^{-8} cc Helium per second

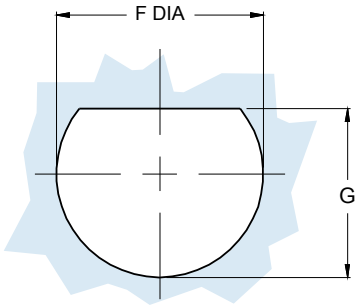

Recommended Panel
Cut-Out

TABLE I: CONNECTOR DIMENSIONS				
SHELL SIZE	**A THREAD CLASS 2A**	**B DIA ±.016(0.4)**	**C FLATS ±.016(0.4)**	**D FLAT ±.005(0.1)**
9	.6875-24 UNEF	1.188(30.2)	1.062(27.0)	.650(16.5)
11	.8125-20 UNEF	1.375(34.9)	1.250(31.8)	.750(19.1)
13	1.000-20 UNEF	1.500(38.1)	1.375(34.9)	.937(23.8)
15	1.125-18 UNEF	1.625(41.3)	1.500(38.1)	1.061(26.9)
17	1.250-18 UNEF	1.750(44.5)	1.625(41.3)	1.186(30.1)
19	1.375-18 UNEF	1.938(49.2)	1.812(46.0)	1.311(33.3)
21	1.500-18 UNEF	2.062(52.4)	1.938(49.2)	1.436(36.5)
23	1.625-18 UNEF	2.188(55.6)	2.062(52.4)	1.561(39.6)
25	1.750-18 UNS	2.312(58.7)	2.188(55.6)	1.686(42.8)

TABLE I (CONTINUED): CONNECTOR DIMENSIONS				
SHELL SIZE	**E DIA ±.016(0.4)**	**F DIA ±.005 (0.1)**	**G ±.005 (0.1)**	**H THREAD CLASS 2A**
9	.109(2.8)	.693 (17.60)	.657 (16.70)	.4375-28 UNEF
11	.109(2.8)	.825 (20.96)	.771 (19.59)	.5625-24 UNEF
13	.109(2.8)	1.010 (25.65)	.955 (24.26)	.6875-24 UNEF
15	.109(2.8)	1.135 (28.83)	1.085 (27.56)	.8125-20 UNEF
17	.140(3.6)	1.260 (32.01)	1.210 (30.73)	.9375-20 UNEF
19	.140(3.6)	1.385 (35.18)	1.335 (33.91)	1.0625-18 UNEF
21	.140(3.6)	1.510 (38.35)	1.460 (37.08)	1.1875-18 UNEF
23	.140(3.6)	1.635 (41.53)	1.585 (40.26)	1.3125-18 UNEF
25	.140(3.6)	1.760 (44.70)	1.710 (43.43)	1.4375-18 UNEF

Dimensions in Inches (millimeters) are subject to change without notice.

© 2013 Glenair, Inc.

947-117
Jam Nut Mount Hermetic Bulkhead Feed-Thru
for MIL-DTL-38999 Series I Type

Product Series	Material/Finish	Insert Arrangement	Dash Number
947	– = CRES Passivate P = CRES/Nickel Plated	Per MIL-STD-1560	Panel Thickness (See Table II)

947	-	117	–	25	-	35	B	P	01

Basic Number	Shell Size	Alternate Key Position	Contact Termination
	Table I	A, B, C, D (Omit for Normal)	P - Pin on Jam Nut Side S - Socket on Jam Nut Side PP - Pin to Pin

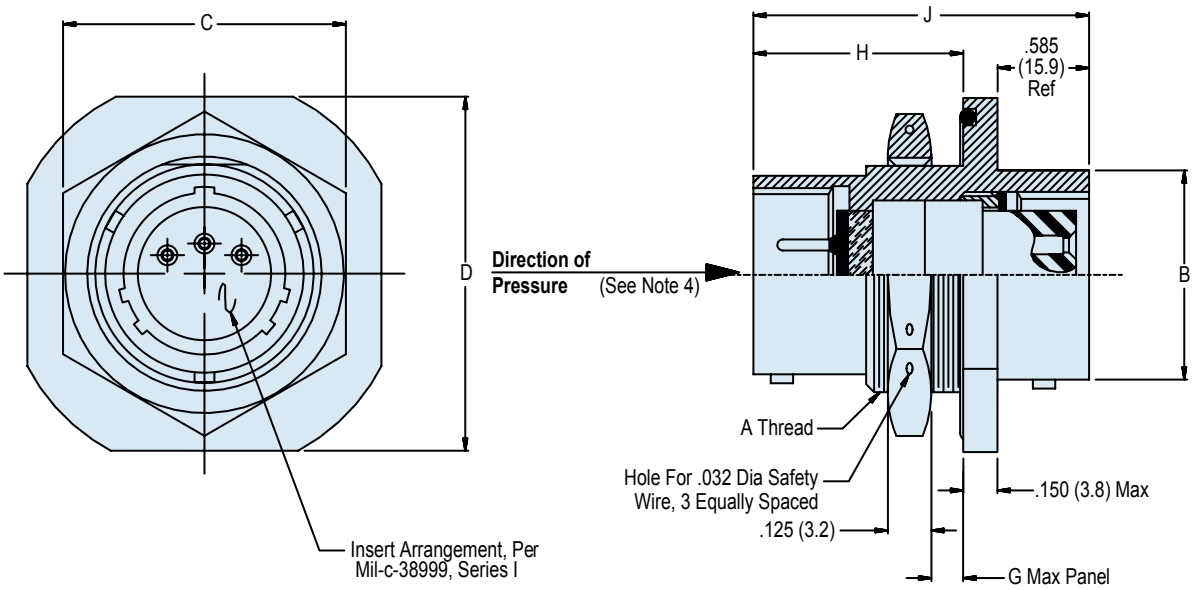

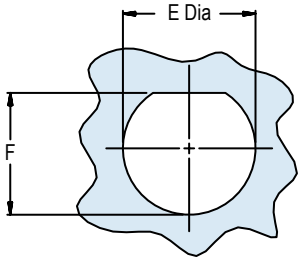

Recommended Panel Cut-out

Dimensions in Inches (millimeters) are subject to change without notice.

© 2013 Glenair, Inc.

947-117
Jam Nut Mount Hermetic Bulkhead Feed-Thru
for MIL-DTL-38999 Series I Type

Glenair®

TABLE I: CONNECTOR DIMENSIONS						
Shell Size	**A Thread Class 2A**	**B Dia Max**	**C Hex**	**D Flats**	**E Dia ± .005 (0.13)**	**F +.000 -.005 (+0.0 -0.13)**
9	11/16-24 UNEF	.573 (14.6)	.875 (22.1)	1.062 (27.0)	.703 (17.9)	.669 (17.0)
11	13/16-20 UNEF	.701 (17.8)	1.000 (25.4)	1.250 (31.8)	.827 (21.0)	.769 (19.5)
13	1-20 UNEF	.851 (21.6)	1.188 (30.2)	1.375 (34.9)	1.015 (25.8)	.955 (24.3)
15	1 1/8-18 UNEF	.976 (24.8)	1.312 (33.3)	1.500 (38.1)	1.140 (29.0)	1.084 (27.5)
17	1 1/4-18 UNEF	1.101 (28.0)	1.438 (37.7)	1.625 (41.3)	1.265 (32.1)	1.208 (30.7)
19	1 3/8-18 UNEF	1.208 (30.7)	1.562 (39.7)	1.812 (46.0)	1.390 (35.3)	1.333 (33.9)
21	1 1/2-18 UNEF	1.333 (33.9)	1.688 (42.9)	1.938 (49.2)	1.515 (38.5)	1.459 (37.1)
23	1 5/8-18 UNEF	1.458 (37.0)	1.812 (46.0)	2.062 (52.4)	1.640 (41.7)	1.580 (40.1)
25	1 3/4-18 UNS	1.583 (40.2)	2.000 (50.8)	2.188 (55.6)	1.765 (44.8)	1.709 (43.4)

TABLE II: PANEL THICKNESS			
DASH NO	**G MAX**	**H MAX**	**J MAX**
01	.250 (6.4)	1.060 (26.9)	1.790 (45.5)
02	.500 (12.7)	1.310 (33.3)	2.040 (51.8)
03	.750 (19.1)	1.560 (39.6)	2.290 (58.2)
04	1.000 (25.4)	1.810 (46.0)	2.540 (64.5)

APPLICATION NOTES

1. Assembly identified with manufacturer's name and PN, space permitting.
2. For pin/pin and skt/skt, symmetrical layouts only, consult factory for available insert arrangements.
3. Power to a given contact on one end will result in power to contact directly opposite, regardless of identification letter.
4. Hermeticity = less than 1 x 10^{-7} cc/sec at one atmosphere. Not for use in liquid atmosphere.
5. Electrical safety limits must be established by user, peak voltage, switching surge, transient, etc. should be used to determine the safety of the application.
6. Material/finish:
   Shell, lock ring, jam nut—CRES/see part no. development.
   Contacts—copper alloy/gold plate and alloy 52/gold plate
   Insulators—high-grade rigid dielectric/N.A. and full glass.
   Seals—fluorosilicone/ N.A.
7. Metric dimensions (mm) are indicated in parentheses.

Dimensions in Inches (millimeters) are subject to change without notice.

© 2013 Glenair, Inc.
U.S. CAGE Code 06324
Printed in U.S.A.

MS27475
Wall Mount Hermetic Receptacle
MIL-DTL-38999 Series II

How To Order: *MS*

Shell Style
MS27475 - *Wall Mount, Series II*

Connector Material / Finish
D - Carbon Steel - Fused Tin Finish
E - Stainless Steel - Passivate Finish
N - Stainless Steel - Nickel Finish

Contact Termination
P - Pin, Solder Cup
X - Pin, Eyelet
C - Pin, PCB Flex Feedthrough
S - Socket, Solder Cup
Z - Socket, Eyelet
D - Socket, PCB Flex Feedthrough

MS27475	Y	10	N	35	P	A

Class
Y- Hermetic

Shell Size
8,10,12,14,16,18,20,22,24

Insert Arrangement
MIL-DTL-38999 Series II Hermetic Inserts Per MIL-STD-1560; See Pages B-2 - B4

Alternate Key Position
A, B, C, D (Omit for Normal)

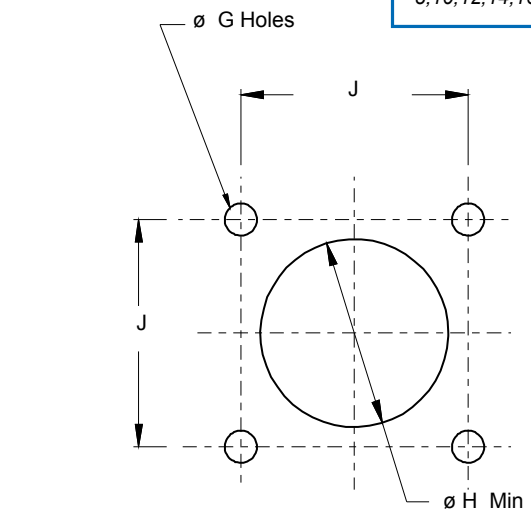

Front Panel Mounting

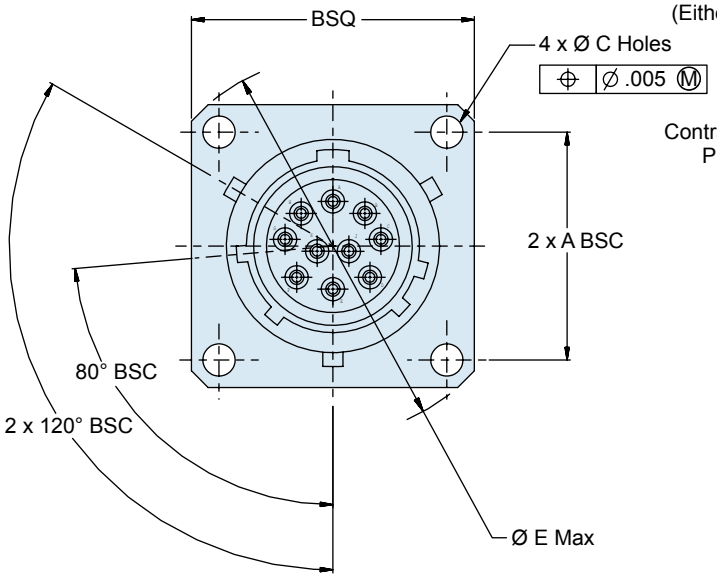

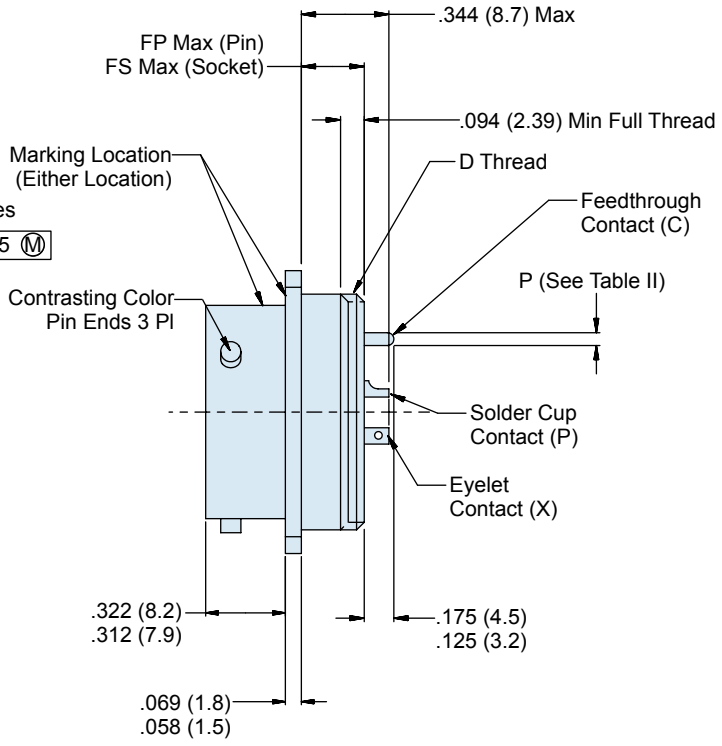

Dimensions in Inches (millimeters) are subject to change without notice.

© 2013 Glenair, Inc.
U.S. CAGE Code 06324
Printed in U.S.A.

232-100-H0
Wall Mount Hermetic Receptacle
MIL-DTL-38999 Series II Type

Glenair®

How To Order: *Commercial*

Connector Series
232 - Series II Type

Shell Style
H0 - Hermetic Wall Mount

Shell Size
08,10,12,14,16,18,20,22,24

Contact Termination
P - Pin, Solder Cup *S - Socket, Solder Cup*
X - Pin, Eyelet *Z - Socket, Eyelet*
C - Pin, PCB *D - Socket, PCB*

232 - 100 - H0 Z1 10 - 35 P N

Connector Type
100 - Hermetic Receptacle

Connector Material / Finish
ZL - CRES, Nickel
Z1 - CRES, Passivated
FT - Carbon Steel, Fused Tin

Insert Arrangement
Per MIL-STD-1560;
See Pages B-2 - B-4

Alternate Key Position
A, B, C, D,
(*N* = Normal)

TABLE I: CONNECTOR DIMENSIONS

SHELL SIZE	A BSC	B SQ MAX	ø C HOLES	D Threads (UNEF-2A)	ø E MAX	FP MAX	FS MAX
8/08	.594(15.1)	.828(21.0)	.130(3.3) .115(2.9)	.5625-24	1.078(27.4)	.250 (6.35)	.375 (9.5)
10	.719(18.3)	.954(24.2)		.6875-24	1.256(31.9)		
12	.812(20.6)	1.047(26.6)		.8125-20	1.391(35.3)		
14	.906(23.0)	1.141(29.0)		.9375-20	1.516(38.5)		
16	.969(24.6)	1.234(31.3)		1.0625-18	1.641(41.7)		
18	1.062(27.0)	1.328(33.7)		1.1875-18	1.766(44.9)		
20	1.156(29.4)	1.453(36.9)		1.3125-18	1.891(48.0)		
22	1.250(31.8)	1.578(40.1)		1.4375-10	2.016(51.2)		
24	1.375(34.9)	1.703(43.3)	.157(4.0) .142(3.6)	1.5625-18	2.204(56.0)	.375 (9.53)	.406 (10.3)

TABLE II: CONTACT SIZE

PRINTED CIRCUIT TAIL CONFIGURATIONS
CONTACT STYLE C AND D

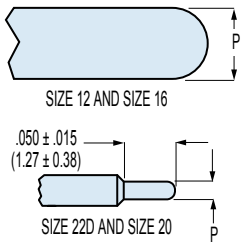

Contact Size	ø P
22D	.011 (0.28) .015 (0.38)
20	.024 (0.61) .028 (0.71)
16	.0635 (1.61) .0615 (1.56)
12	.095 (2.41) .093 (2.36)

TABLE I (CONTINUED): CONNECTOR DIMENSIONS

SHELL SIZE	ø G HOLES	ø H MIN	ø J BSC
8	.133(3.4) .123(3.1)	.570(14.5)	.594(15.1)
10		.690(17.5)	.719(18.3)
12		.820(20.8)	.812(20.6)
14		.940(23.9)	.906(23.0)
16		1.070(27.2)	.969(24.6)
18		1.190(30.2)	1.062(27.0)
20		1.320(33.5)	1.156(29.4)
22	.159(4.0) .149(3.8)	1.440(36.6)	1.250(31.8)
24		1.570(39.9)	1.375(34.9)

WIRE ACCOMODATION

Contact Size	Wire Guage
22D	#22 - #28
20	#20 - #24
16	#16 - #20
12	#12 - #14

HERMETIC LEAK RATE MOD CODES

Designator	Required Leak Rate
–585A	1 x 10^{-10} cc Helium per second
–585B	1 x 10^{-9} cc Helium per second
–585C	1 x 10^{-8} cc Helium per second

Dimensions in Inches (millimeters) are subject to change without notice.

© 2013 Glenair, Inc. U.S. CAGE Code 06324 Printed in U.S.A.

MS27476
Box Mount Hermetic Receptacle
MIL-DTL-38999 Series II

How To Order: *MS*

Shell Style
MS27476 - *Box Mount, Series II*

Connector Material / Finish
D - Carbon Steel - Fused Tin Finish
E - Stainless Steel - Passivate Finish
N - Stainless Steel - Nickel Finish

Contact Termination
P - Pin, Solder Cup
X - Pin, Eyelet
C - Pin, PCB Flex Feedthrough
S - Socket, Solder Cup
Z - Socket, Eyelet
D - Socket, PCB Flex Feedthrough

MS27476	Y	10	N	35	P	A

Class
Y- Hermetic

Shell Size
8,10,12,14,16,18,20,22,24

Insert Arrangement
MIL-DTL-38999 Series II Hermetic Inserts Per MIL-STD-1560;
See Pages B-2 - B-4

Alternate Key Position
A, B, C, D
(Omit for Normal)

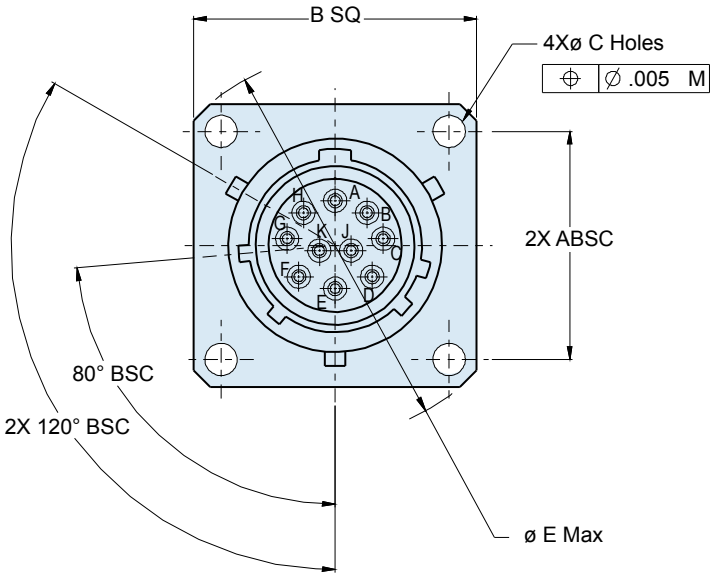

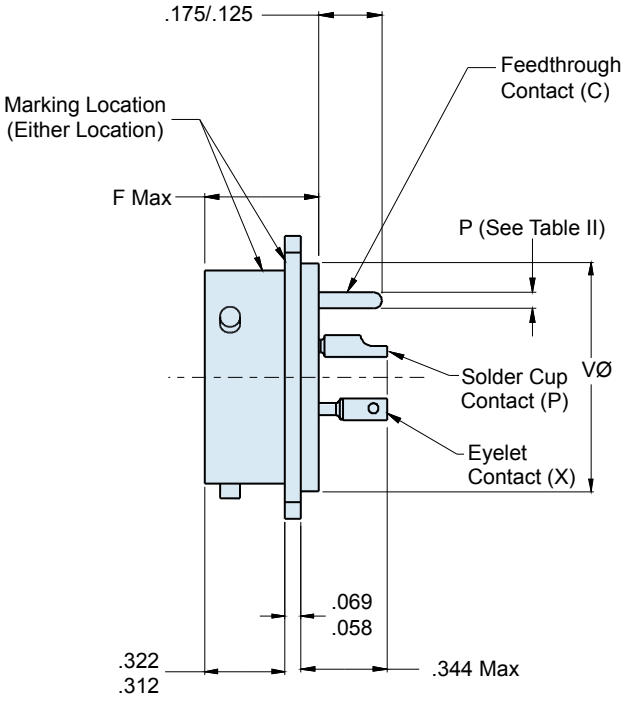

Dimensions in Inches (millimeters) are subject to change without notice.

© 2013 Glenair, Inc.
U.S. CAGE Code 06324
Printed in U.S.A.

232-100-H2
Box Mount Hermetic Receptacle
MIL-DTL-38999 Series II Type

Glenair®

How To Order: *Commercial*

Connector Series	Shell Style	Shell Size	Contact Termination			
232 - Series II Type	H2 - Hermetic Box Mount	08,10,12,14,16,18,20,22,24	P - Pin, Solder Cup	S - Socket, Solder Cup		
			X - Pin, Eyelet	Z - Socket, Eyelet		
			C - Pin, PCB	D - Socket, PCB		

232	-	100	-	H2	Z1	10	-	35	P	N

Connector Type	Connector Material / Finish	Insert Arrangement	Alternate Key Position
100 - Hermetic Receptacle	ZL - CRES, Nickel Z1 - CRES, Passivated FT - Carbon Steel, Fused Tin	Per MIL-STD-1560; See Pages B-2 - B-4	A, B, C, D, (N = Normal)

TABLE I: CONNECTOR DIMENSIONS

SHELL SIZE	A BSC	B SQ MAX	ø C HOLES	ø E MAX	F MAX	V Diameter
8/08	.594(15.1)	.828(21.0)	.130(3.3) .115(2.9)	1.078(27.4)	.453(11.5)	.562(14.3)
10	.719(18.3)	.954(24.2)		1.266(32.2)		.672(17.1)
12	.812(20.6)	1.047(26.6)		1.391(35.3)		.781(19.8)
14	.906(23.0)	1.141(29.0)		1.516(38.5)		.906(23.0)
16	.969(24.6)	1.234(31.3)		1.641(41.7)		1.031(26.2)
18	1.062(27.0)	1.328(33.7)		1.766(44.9)		1.156(29.4)
20	1.156(29.4)	1.453(36.9)		1.891(48.0)		1.250(31.8)
22	1.250(31.8)	1.578(40.1)		2.016(51.2)		1.375(34.9)
24	1.375(34.9)	1.703(43.3)	.157(4.0) .142(3.6)	2.204(56.0)	.484(12.3)	1.500(38.1)

TABLE II: CONTACT SIZE

PRINTED CIRCUIT TAIL CONFIGURATIONS
CONTACT STYLE C AND D

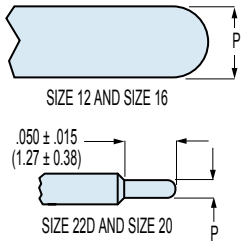

Contact Size	ø P
22D	.011 (0.28) .015 (0.38)
20	.024 (0.61) .028 (0.71)
16	.0635 (1.61) .0615 (1.56)
12	.095 (2.41) .093 (2.36)

TABLE I (CONTINUED): CONNECTOR DIMENSIONS

SHELL SIZE	ø G HOLES	ø H MIN	ø J BSC
8/08	.133(3.4) .123(3.1)	.570(14.5)	.594(15.1)
10		.690(17.5)	.719(18.3)
12		.820(20.8)	.812(20.6)
14		.940(23.9)	.906(23.0)
16		1.070(27.2)	.969(24.6)
18		1.190(30.2)	1.062(27.0)
20		1.320(33.5)	1.156(29.4)
22	.159(4.0) .149(3.8)	1.440(36.6)	1.250(31.8)
24		1.570(39.9)	1.375(34.9)

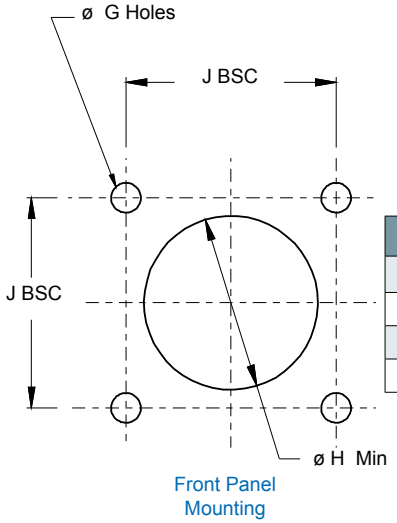

HERMETIC LEAK RATE MOD CODES

Designator	Required Leak Rate
–585A	1 x 10^{-10} cc Helium per second
–585B	1 x 10^{-9} cc Helium per second
–585C	1 x 10^{-8} cc Helium per second

WIRE ACCOMODATION

Contact Size	Wire Guage
22D	#22 - #28
20	#20 - #24
16	#16 - #20
12	#12 - #14

Dimensions in Inches (millimeters) are subject to change without notice.

© 2013 Glenair, Inc.
U.S. CAGE Code 06324
Printed in U.S.A.

MS27477
Jam Nut Mount Hermetic Receptacle
MIL-DTL-38999 Series II

How To Order: *MS*

Shell Style
MS27477 - Jam Nut Mount, Series II

Connector Material / Finish
D - Carbon Steel - Fused Tin Finish
E - Stainless Steel - Passivate Finish
N - Stainless Steel - Nickel Finish

Contact Termination
P - Pin, Solder Cup
X - Pin, Eyelet
C - Pin, PCB Flex Feedthrough
S - Socket, Solder Cup
Z - Socket, Eyelet
D - Socket, PCB Flex Feedthrough

MS27477	Y	10	N	35	P	A

Class
Y- Hermetic

Shell Size
8,10,12,14,16,18,20,22,24

Insert Arrangement
MIL-DTL-38999 Series II Hermetic Inserts Per MIL-STD-1560;
See Pages B-2 - B-4

Alternate Key Position
A, B, C, D
(Omit for Normal)

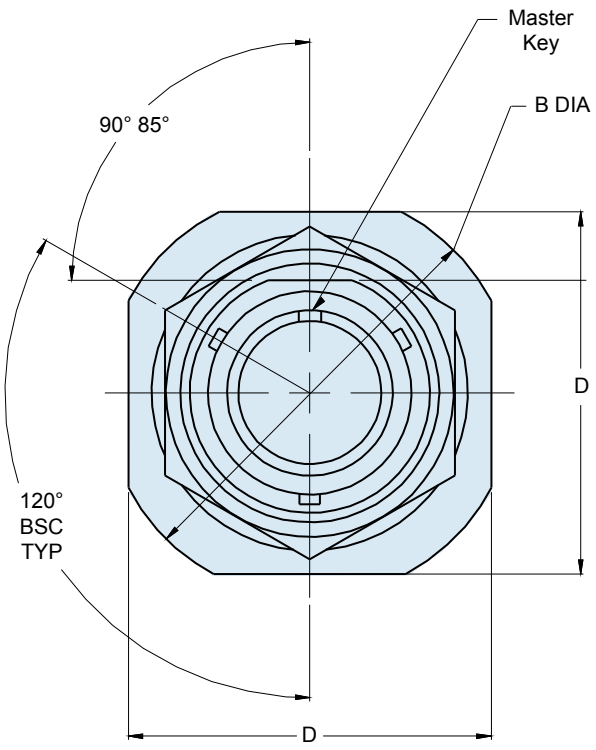

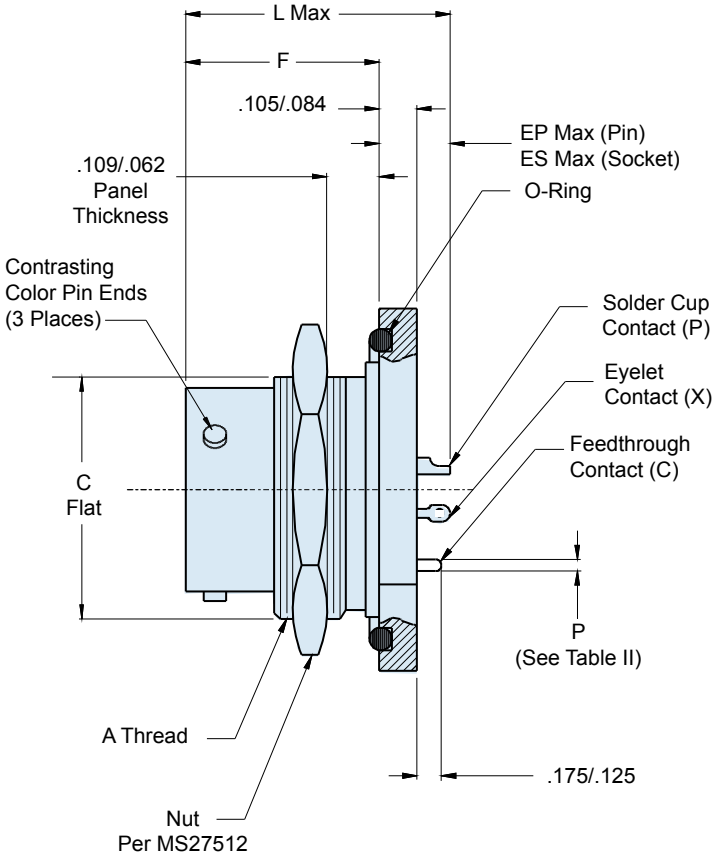

Dimensions in Inches (millimeters) are subject to change without notice.

© 2013 Glenair, Inc.
U.S. CAGE Code 06324
Printed in U.S.A.

232-100-H7
Jam Nut Mount Hermetic Receptacle
MIL-DTL-38999 Series II Type

How To Order: *Commercial*

Connector Series
232 - Series II Type

Shell Style
H7 - Hermetic Box Mount

Shell Size
08,10,12,14,16,18,20,22,24

Contact Termination
P - Pin, Solder Cup
X - Pin, Eyelet
C - Pin, PCB
S - Socket, Solder Cup
Z - Socket, Eyelet
D - Socket, PCB

232 - 100 - H7 Z1 10 - 35 P N

Connector Type
100 - Hermetic Receptacle

Connector Material / Finish
ZL - CRES, Nickel
Z1 - CRES, Passivated
FT - Carbon Steel, Fused Tin

Insert Arrangement
Per MIL-STD-1560;
See Pages B-2 - B-4

Alternate Key Position
A, B, C, D,
(*N* = Normal)

WIRE ACCOMODATION	
Contact Size	**Wire Guage**
22D	#22 - #28
20	#20 - #24
16	#16 - #20
12	#12 - #14

HERMETIC LEAK RATE MOD CODES	
Designator	**Required Leak Rate**
–585A	1 x 10^{-10} cc Helium per second
–585B	1 x 10^{-9} cc Helium per second
–585C	1 x 10^{-8} cc Helium per second

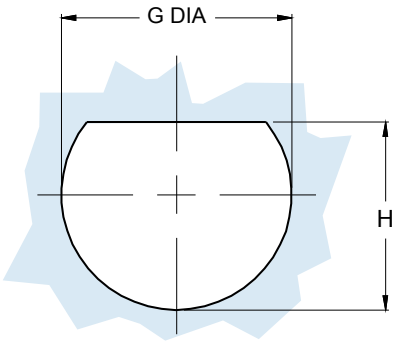

Recommended Panel Cut-Out

TABLE I: CONNECTOR DIMENSIONS

SHELL SIZE	A THREAD CLASS 2A	B DIA ±.016(0.4)	C FLAT ±.004(0.1)	D A/F ±.016(0.4)
8/08	.875-20 UNEF	1.375(34.9)	.815(20.7)	1.25(31.8)
10	1.000-20 UNEF	1.5(38.1)	.939(23.9)	1.375(34.9)
12	1.125-18 UNEF	1.625(41.3)	1.063(27.0)	1.5(38.1)
14	1.250-18 UNEF	1.75(44.5)	1.188(30.2)	1.625(41.3)
16	1.375-18 UNEF	1.938(49.2)	1.318(33.5)	1.781(45.2)
18	1.500-18 UNEF	2.016(51.2)	1.438(36.5)	1.890(48.0)
20	1.625-18 UNEF	2.141(54.4)	1.563(39.7)	2.016(51.2)
22	1.750-18 UNS	2.265(57.5)	1.688(42.9)	2.140(54.4)
24	1.875-16 UN	2.39(60.7)	1.813(46.1)	2.265(57.5)

TABLE I (CONTINUED): CONNECTOR DIMENSIONS

SHELL SIZE	EP MAX	ES MAX	F ±.005(0.1)	G DIA ±.005(0.1)	H ±.005(0.1)	L MAX
8/08	.281 (7.1)	.359 (9.1)	.438(11.1)	.885(22.48)	.830(21.08)	.724(18.4)
10	.281 (7.1)	.359 (9.1)	.438(11.1)	1.010(25.65)	.955(24.26)	.724(18.4)
12	.281 (7.1)	.359 (9.1)	.438(11.1)	1.135(28.83)	1.085(27.56)	.724(18.4)
14	.281 (7.1)	.359 (9.1)	.438(11.1)	1.260(32.01)	1.210(30.73)	.724(18.4)
16	.281 (7.1)	.359 (9.1)	.438(11.1)	1.385(35.18)	1.335(33.91)	.724(18.4)
18	.281 (7.1)	.359 (9.1)	.438(11.1)	1.510(38.35)	1.460(37.08)	.724(18.4)
20	.250 (6.4)	.344 (8.7)	.464(11.8)	1.635(41.53)	1.585(40.26)	.719(18.3)
22	.250 (6.4)	.344 (8.7)	.464(11.8)	1.760(44.70)	1.709(43.42)	.719(18.3)
24	.250 (6.4)	.344 (8.7)	.464(11.8)	1.885(47.88)	1.835(46.61)	.719(18.3)

TABLE II: CONTACT SIZE

PRINTED CIRCUIT TAIL CONFIGURATIONS
CONTACT STYLE C AND D

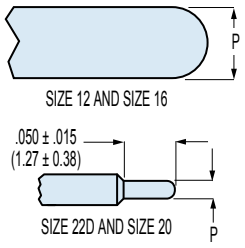

Contact Size	ø P
22D	.011 (0.28) .015 (0.38)
20	.024 (0.61) .028 (0.71)
16	.0635 (1.61) .0615 (1.56)
12	.095 (2.41) .093 (2.36)

Dimensions in Inches (millimeters) are subject to change without notice.

© 2013 Glenair, Inc.
U.S. CAGE Code 06324
Printed in U.S.A.

MS27478
Solder Mount Hermetic Receptacle
MIL-DTL-38999 Series II

How To Order: *MS*

Shell Style
MS27478 - *Solder Mount, Series II*

Connector Material / Finish
D - *Carbon Steel - Fused Tin Finish*
E - *Stainless Steel - Passivate Finish*
N - *Stainless Steel - Nickel Finish*

Contact Termination
P - *Pin, Solder Cup*
X - *Pin, Eyelet*
C - *Pin, PCB Flex Feedthrough*
S - *Socket, Solder Cup*
Z - *Socket, Eyelet*
D - *Socket, PCB Flex Feedthrough*

MS27478	Y	10	N	35	P	A

Class
Y- Hermetic

Shell Size
8,10,12,14,16,18,20,22,24

Insert Arrangement
MIL-DTL-38999 Series II Hermetic Inserts Per MIL-STD-1560;
See Pages B-2 - B-4

Alternate Key Position
A, B, C, D
(Omit for Normal)

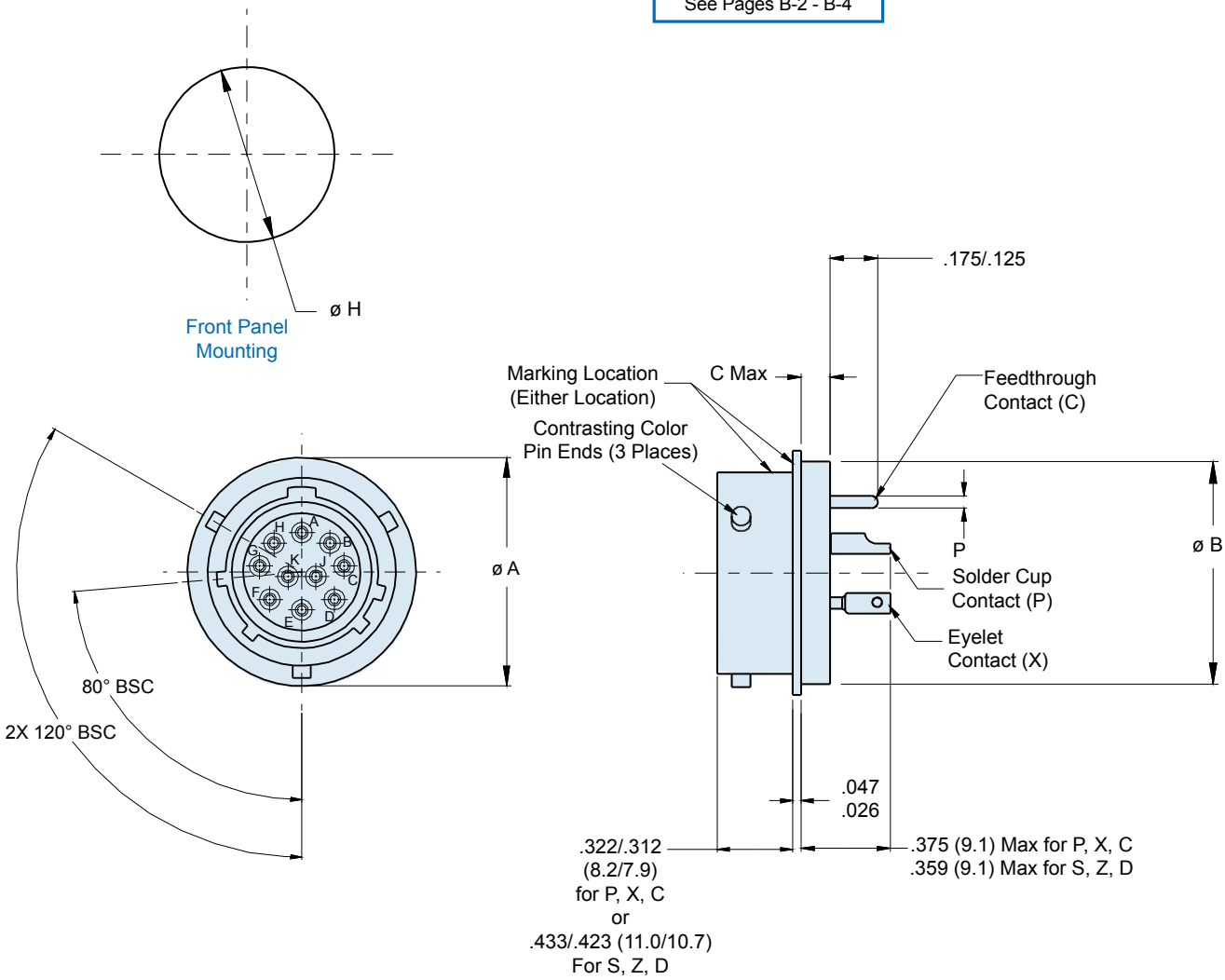

Dimensions in Inches (millimeters) are subject to change without notice.

© 2013 Glenair, Inc.
U.S. CAGE Code 06324
Printed in U.S.A.

232-100-H5
Solder Mount Hermetic Receptacle
MIL-DTL-38999 Series II Type

How To Order: *Commercial*

Connector Series	Shell Style	Shell Size	Contact Termination			
232	H5	08,10,12,14,16,18,20,22,24	P - Pin, Solder Cup	S - Socket, Solder Cup		
			X - Pin, Eyelet	Z - Socket, Eyelet		
			C - Pin, PCB	D - Socket, PCB		

232	-	100	-	H5	Z1	10	-	35	P	N

Connector Type
100 - Hermetic Receptacle

Connector Material / Finish
ZL - CRES, Nickel
Z1 - CRES, Passivated
FT - Carbon Steel, Fused Tin

Insert Arrangement
Per MIL-STD-1560;
See Pages B-2 - B-4

Alternate Key Position
A, B, C, D,
(*N* = Normal)

HERMETIC LEAK RATE MOD CODES	
Designator	**Required Leak Rate**
–585A	1 x 10^{-10} cc Helium per second
–585B	1 x 10^{-9} cc Helium per second
–585C	1 x 10^{-8} cc Helium per second

TABLE I: CONNECTOR DIMENSIONS

SHELL SIZE	ø A ± .011 (0.3)	ø B	C MAX	ø H ±.005 (0.1)
8/08	.687 (17.45)	.563 (14.3) .557 (14.1)	.125 (3.2)	.570 (14.5)
10	.797 (20.2)	.673 (17.1) .667 (16.9)		.680 (17.3)
12	.906 (23.0)	.782 (19.9) .776 (19.7)		.789 (20.0)
14	1.031 (26.2)	.907 (23.0) .901 (22.9)		.914(23.2)
16	1.156 (29.4)	1.032 (26.2) 1.027 (26.1)		1.039 (26.4)
18	1.281 (32.5)	1.157 (29.4) 1.151 (29.2)		1.164 (29.6)
20	1.375 (34.9)	1.251 (31.8) 1.245 (31.6)		1.258 (32.0)
22	1.500 (38.1)	1.376 (35.0) 1.370 (34.8)	.156 (4.0)	1.383 (35.1)
24	1.625 (41.3)	1.501 (38.1) 1.495 (38.0)		1.508 (38.3)

TABLE II: CONTACT SIZE

PRINTED CIRCUIT TAIL CONFIGURATIONS
CONTACT STYLE C AND D

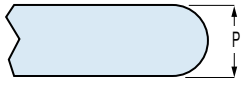

SIZE 12 AND SIZE 16

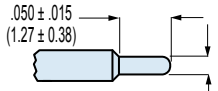

SIZE 22D AND SIZE 20

Contact Size	ø P
22D	.011 (0.28) .015 (0.38)
20	.024 (0.61) .028 (0.71)
16	.0635 (1.61) .0615 (1.56)
12	.095 (2.41) .093 (2.36)

WIRE ACCOMODATION	
Contact Size	**Wire Guage**
22D	#22 - #28
20	#20 - #24
16	#16 - #20
12	#12 - #14

Dimensions in Inches (millimeters) are subject to change without notice.

© 2013 Glenair, Inc.
U.S. CAGE Code 06324
Printed in U.S.A.

232-103-H7
Jam Nut Mount Hermetic Bulkhead Feed-Thru
MIL-DTL-38999 Series II Type

Connector Series
232 - D38999 Series II Type

Shell Style
H7 - Jam Nut Mount

Shell Size
08
10
12
14
16
18
20
22
24

Insert Arrangement
Per MIL-DTL-38999 Series II
MIL-STD-1560

Alternate Key Position
A, B, C, D
(*N* = Normal)

232	-	103	-	H7	Z1	10	-	35	P	N	-	01

Connector Type
103 - Hermetic Bulkhead Feed-Thru

Connector Material and Finish
FT - Carbon Steel, Fused Tin
Z1 - CRES, Passivated
ZL - CRES, Nickel Finish

Contact Termination
P - Pin on Jam Nut Side
S - Socket on Jam Nut Side

Panel Accomodation
01 - .0625" (Min) .125" (Max)
02 - .0625" (Min) .250" (Max)
03 - .0625" (Min) .500" (Max)

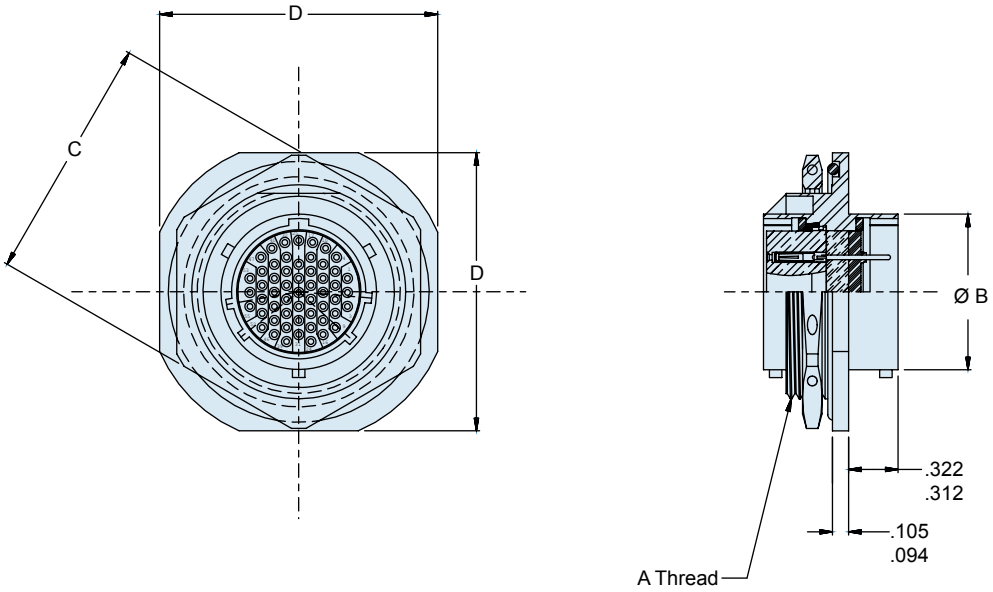

Dimensions in Inches (millimeters) are subject to change without notice.

© 2013 Glenair, Inc.

TABLE I: CONNECTOR DIMENSIONS						
SHELL SIZE	A THREAD CLASS 2A	B DIA MAX	C HEX	D FLATS	E DIA ±.005(0.1)	F +.000-.005 (0-0.1)
08	.875-20 UNEF	.474(12.0)	1.062(27.0)	1.250(31.8)	.885(22.5)	.830(21.1)
10	1.000-20 UNEF	.591(15.0)	1.188(30.2)	1.375(34.9)	1.010(25.7)	.955(24.3)
12	1.125-18 UNEF	.751(19.1)	1.312(33.3)	1.500(38.1)	1.135(28.8)	1.085(27.6)
14	1.250-18 UNEF	.876(22.3)	1.438(36.5)	1.625(41.3)	1.260(32.0)	1.210(30.7)
16	1.375-18 UNEF	1.001(25.4)	1.562(39.7)	1.781(45.2)	1.385(35.2)	1.335(33.9)
18	1.500-18 UNEF	1.126(28.6)	1.688(42.9)	1.890(48.0)	1.510(38.4)	1.460(37.1)
20	1.625-18 UNEF	1.251(31.8)	1.812(46.0)	2.016(51.2)	1.635(41.5)	1.585(40.3)
22	1.750-18 UNS	1.376(35.0)	2.000(50.8)	2.140(54.4)	1.760(44.7)	1.710(43.4)
24	1.875-16 UN	1.501(38.1)	2.125(54.0)	2.265(57.5)	1.885(47.9)	1.835(46.6)

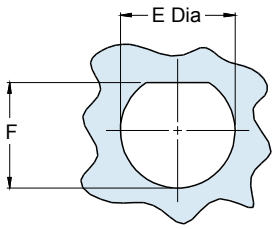

Recommended Panel Cut-Out

APPLICATION NOTES

1. Power to a given contact on one end will result in power to contact directly opposite, regardless of identification letter.
2. Hermeticity = less than 1 x 10^{-7} cc/sec at one atmosphere. Not for use in liquid atmosphere.
3. Material/finish:
   Shell, nut – CRES/passivated, carbon steel/fused tin or CRES/nickel per QQ-N-290.
   Contacts – Gold Plated. Pin: alloy 52; Skt.: copper alloy
   Insulator – fused vitreous glass/N.A.
   Seals – fluorosilicone rubber/N.A.
4. Metric dimensions (mm) are indicated in parentheses.

Dimensions in Inches (millimeters) are subject to change without notice.

© 2013 Glenair, Inc.
U.S. CAGE Code 06324
Printed in U.S.A.

232-103-H9
Jam Nut Mount Hermetic Bulkhead Feed-Thru
Sav-Con® Connector Saver • MIL-DTL-38999 Series II Type

Connector Series
232 - D38999 Series II Type

Shell Style
H9 - Jam Nut Mount Sav-Con® Connector Saver

Shell Size
08
10
12
14
16
18
20
22
24

Insert Arrangement
Per MIL-DTL-38999 Series II
MIL-STD-1560

Broach Polarization
A, B, C, D
(*N* = Normal)

232	-	103	-	H9	Z1	14	-	35	P	N	-	02

Connector Type
103 - Hermetic Bulkhead Feed-Thru

Contact Termination
P - Pin on Plug End, Socket Opposite
S - Socket on Plug End, Pin Opposite

Connector Material and Finish
Z1 - CRES, Passivated
ZL - CRES, Nickel Finish

Panel Accomodation
01 - .062" (Min) .125" (Max)
02 - .062" (Min) .250" (Max)
03 - .062" (Min) .500" (Max)

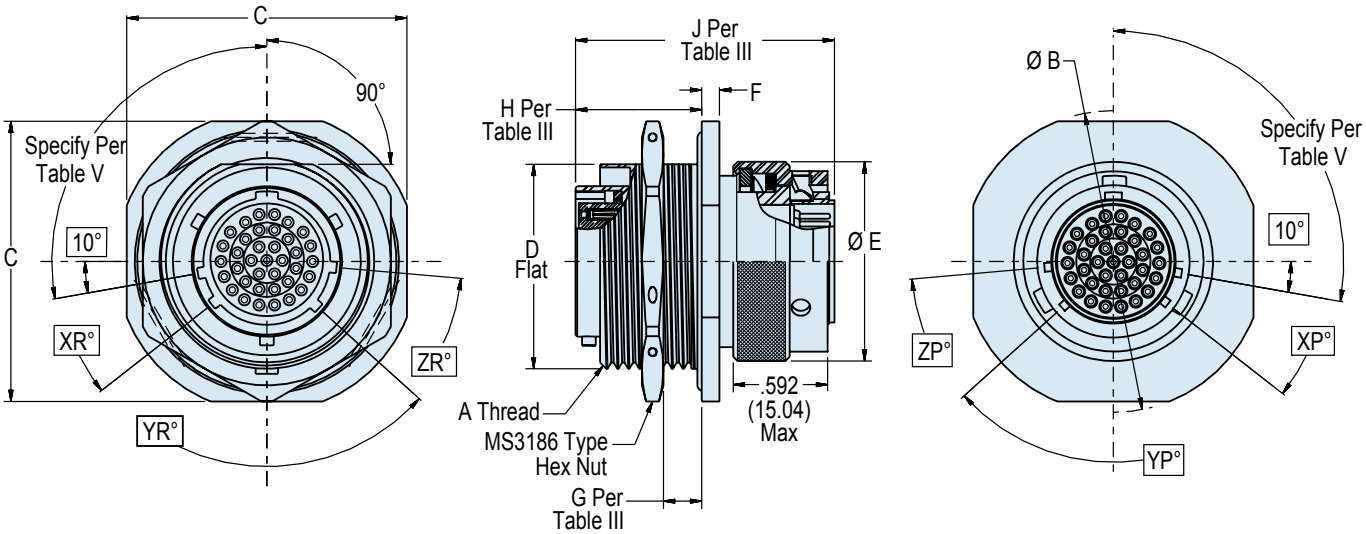

Dimensions in Inches (millimeters) are subject to change without notice.

© 2013 Glenair, Inc.
U.S. CAGE Code 06324
Printed in U.S.A.

232-103-H9
Jam Nut Mount Hermetic Bulkhead Feed-Thru
Sav-Con® Connector Saver • MIL-DTL-38999 Series II Type

Glenair®

TABLE I: CONNECTOR DIMENSIONS

SHELL SIZE	A THREAD CLASS 2A	B DIA	C A/F	D FLAT	E DIA MAX	F	K DIA	N
8	.875-20 UNEF	1.391/1.359 (35.33/34.52)	1.266/1.234 (27.38/26.57)	.818/.811 (16.64/20.60)	.750 (19.05)	.105/.084 (2.67/2.13)	.895/.885 (22.73/22.48)	.830/.820 (21.08/20.83)
10	1.000-20 UNEF	1.516/1.484 (38.51/37.69)	1.391/1.359 (35.33/34.52)	.942/.935 (19.18/23.75)	.859 (21.82)	.105/.084 (2.67/2.13)	1.020/1.010 (25.91/25.65)	.955/.945 (24.26/24.00)
12	1.125-18 UNEF	1.641/1.609 (41.68/40.87)	1.516/1.484 (38.51/37.69)	1.066/1.059 (27.08/26.90)	1.031 (26.19)	.105/.084 (2.67/2.13)	1.145/1.135 (29.08/28.83)	1.085/1.075 (27.56/27.31)
14	1.250-18 UNEF	1.766/1.734 (44.86/44.04)	1.641/1.609 (41.68/40.87)	1.191/1.184 (30.25/30.07)	1.156 (29.36)	.105/.084 (2.67/2.13)	1.270/1.260 (32.26/32.00)	1.210/1.200 (30.73/30.48)
16	1.375-18 UNEF	1.954/1.922 (49.63/48.82)	1.797/1.765 (45.64/44.83)	1.321/1.314 (33.55/33.38)	1.281 (32.54)	.105/.084 (2.67/2.13)	1.395/1.385 (35.43/35.18)	1.335/1.325 (33.91/33.66)
18	1.500-18 UNEF	2.032/2.000 (51.61/50.80)	1.906/1.874 (48.41/47.60)	1.441/1.434 (36.60/36.42)	1.406 (35.71)	.105/.084 (2.67/2.13)	1.520/1.510 (38.61/38.35)	1.460/1.450 (37.08/36.83)
20	1.625-18 UNEF	2.157/2.125 (54.79/53.98)	2.032/2.000 (51.61/50.80)	1.566/1.559 (39.78/39.60)	1.531 (38.89)	.105/.084 (2.67/2.13)	1.645/1.635 (41.78/41.53)	1.585/1.575 (40.26/40.01)
22	1.750-18 UNS	2.281/2.249 (57.94/57.12)	2.156/2.124 (54.76/53.95)	1.691/1.684 (42.95/42.77)	1.641 (41.68)	.105/.084 (2.67/2.13)	1.770/1.760 (44.96/44.70)	1.709/1.699 (43.41/43.15)
24	1.875-16 UN	2.406/2.374 (61.11/60.30)	2.281/2.249 (57.94/57.12)	1.816/1.809 (46.13/45.95)	1.766 (44.86)	.105/.084 (2.67/2.13)	1.895/1.885 (48.13/47.88)	1.855/1.825 (47.12/46.36)

TABLE IV: MASTER KEY/KEYWAY POSITIONS

SHELL SIZE	XP XR	YP YR	ZP ZR	N	A	B	C	D
8	28°	100°	37°	100°	82°	—	—	118°
10	28°	100°	37°	100°	86°	72°	128°	114°
12	28°	100°	37°	100°	80°	68°	132°	120°
14	28°	100°	37°	100°	79°	66°	134°	121°
16	28°	100°	37°	100°	82°	70°	130°	118°
18	28°	100°	37°	100°	82°	70°	130°	118°
20	28°	100°	37°	100°	82°	70°	130°	118°
22	28°	100°	37°	100°	85°	74°	126°	115°
24	28°	100°	37°	100°	85°	74°	126°	115°

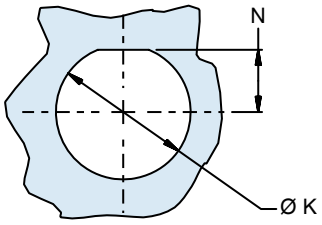

Recommended Panel Cut-out

TABLE III: DWV VOLTAGE LEVELS

SERVICE RATING	VOLTAGE AC RMS 60HZ
M	1300 VAC
I	1800 VAC
II	2300 VAC
N	1000 VAC

HERMETIC LEAK RATE MOD CODES

Designator	Required Leak Rate
–585A	1 x 10^{-10} cc Helium per second
–585B	1 x 10^{-9} cc Helium per second
–585C	1 x 10^{-8} cc Helium per second

TABLE II: DIMENSIONS

SYM	G	H	J
01	.062-.125 (1.57-3.18)	.469 MAX (11.91 MAX)	1.300 MAX (33.02 MAX)
02	.062-.250 (1.57-6.35)	.600 MAX (15.24 MAX)	1.425 MAX (36.20 MAX)
03	.062-.500 (1.57-12.7)	.850 MAX (21.59 MAX)	1.675 MAX (42.55 MAX)

APPLICATION NOTES

1. Material/finish:
   - Shell, jam-nut, coupling nut – 300 Series CRES/see P/N development.
   - Contacts, pin – Nickel-iron alloy/Gold plate.
   - Contacts, socket – Copper alloy/Gold plate.
   - Insulator, pin – Vitreous glass/N.A.
   - Insulator, sockets – Hi-grade rigid dielectric/N.A.
   - Grounding springs – Copper alloy/Gold plate.
   - O-Rings and seals – Fluorosilicone blend/N/A.
2. Assembly identified with manufacturer's name and part number, space permitting.
3. Test requirements:
   - D.W.V. – Per Table IV
   - I.R. – 5 GigOhms @ 500 VDC
   - Hermeticity – <1 x 10^-7 sccHe/sec @ 1 ATM differential.
4. Metric dimensions (mm) are indicated in parentheses.

Dimensions in Inches (millimeters) are subject to change without notice.

© 2013 Glenair, Inc.

U.S. CAGE Code 06324

Printed in U.S.A.

237-280
Special Weld Mount Hermetic Receptacle
MIL-DTL-38999 Series II Type (Similar to MS27478Y Series II)

Contact Style

C *- Pin, Feedthrough*	***D*** *- Socket, Feedthrough*
P *- Pin, Solder Cup*	***S*** *- Socket, Solder Cup*
X *- Pin, Eyelet*	***Z*** *- Socket Eyelet*

Connector Material and Finish
Z1 *- CRES, Passivated*
ZL *- CRES, Nickel Finish*

Broach Position
A, B, C, D
(***N*** = Normal)

237-280	Z1	10	-	35	P	N
Basic Part Number		Shell Size		Contact Arrangement Per MIL-STD-1560		

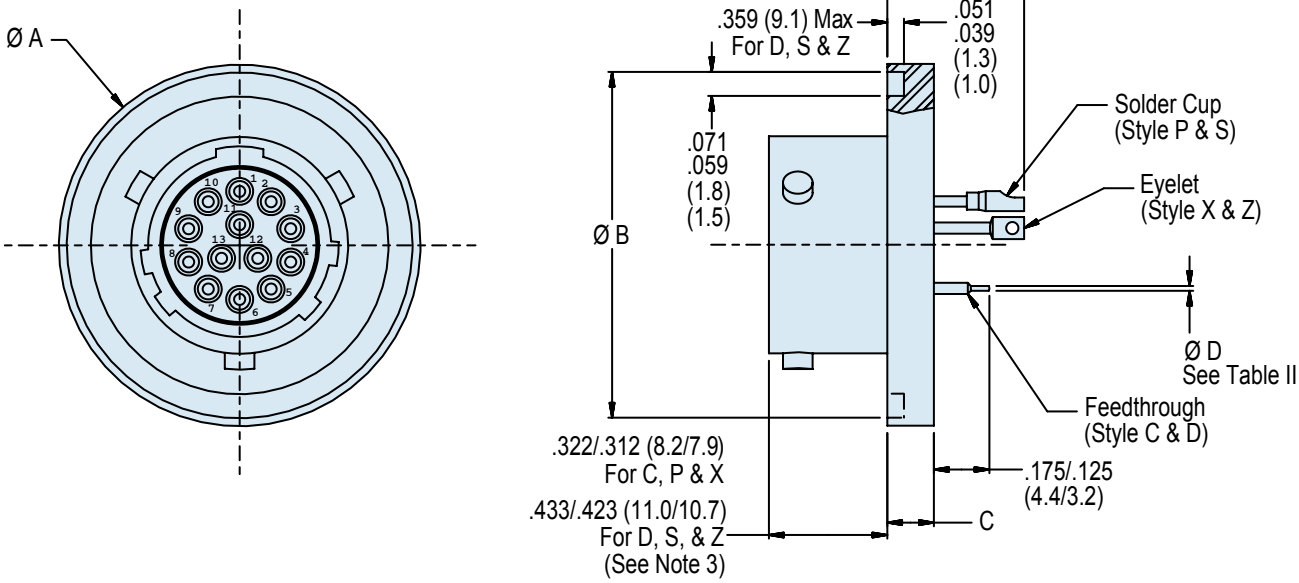

Dimensions in Inches (millimeters) are subject to change without notice.

© 2013 Glenair, Inc.

237-280
Special Weld Mount Hermetic Receptacle
MIL-DTL-38999 Series II Type (Similar to MS27478Y Series II)

Glenair®

TABLE I: Connector Dimensions			
Shell Size	A Dia	B Dia	C Flange
08	.863/.851 (21.9/21.6)	.820/.808 (20.8/20.5)	.134/.118 (3.4/3.0)
10	.984/.972 (25.0/24.7)	.941/.929 (23.9/23.6)	.134/.118 (3.4/3.0)
12	1.106/1.094 (28.1/27.8)	1.063/1.051 (27.0/26.7)	.134/.118 (3.4/3.0)
14	1.232/1.220 (31.3/31.0)	1.189/1.177 (30.2/29.9)	.134/.118 (3.4/3.0)
16	1.358/1.346 (34.5/34.2)	1.315/1.303 (33.4/33.1)	.134/.118 (3.4/3.0)
18	1.445/1.433 (37.7/36.4)	1.402/1.390 (35.6/35.3)	.134/.118 (3.4/3.0)
20	1.591/1.579 (40.4/40.1)	1.547/1.535 (39.3/39.0)	.134/.118 (3.4/3.0)
22	1.732/1.720 (44.0/43.7)	1.689/1.677 (42.9/42.6)	.165/.149 (4.2/3.8)
24	1.898/1.886 (48.2/47.9)	1.854/1.842 (47.1/46.8)	.165/.149 (4.2/3.8)

TABLE II: Contact Size		
Contact Size	D Dia	E Dia
220	.011/.015 (0.28/0.38)	.0305/.0295 (0.77/0.75)
20	.024/.028 (0.61/0.71)	.041/.039 (1.04/0.99)
16	.0635/.0615 (1.61/1.56)	.0635/.0615 (1.61/1.56)
12	.095/.093 (2.41/2.36)	.095/.093 (2.41/2.36)
10	.126/.124 (3.20/3.15)	.126/.124 (3.20/3.15)

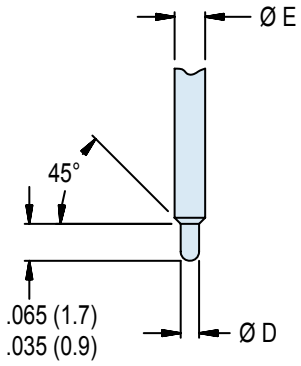

For #22D and 20 Contacts Only (#20 Inactive for New Design)

APPLICATION NOTES

1. Material/finish:
   - Shell (Z1) – 304L CRES/passivate per ASTM A-697.
   - Shell (ZL) – 304L CRES/nickel plate per DTL-38999.
   - Contacts – 52 Ni-Alloy per AMS-I-23011 Class 2, MIL-DTL-45204 Type II, Class 1 (.00005 min thick).
   - Insulator – full glass/N.A.
   - Bayonets - 300 Series CRES/passivate.
   - Seals – fluorosilicone blend elastomer/N.A.
2. Assembly identified with manufacturer's name and part number, space permitting.
3. This area IAW MC27478 (MIL-DTL-38999, Series II).
4. Performance Criteria IAW MIL-DTL-38999.
5. Metric Dimensions (mm) in parentheses.

Dimensions in Inches (millimeters) are subject to change without notice.

© 2013 Glenair, Inc.
U.S. CAGE Code 06324
Printed in U.S.A.

947-120
Jam Nut Mount Hermetic Bulkhead Feed-Thru
.062/.125in Panel
MIL-DTL-38999 Series II Type

Product Series	Shell Size		Alternate Key Position		Contact Termination
947	- 120	- 20	- 35	B	P
	Basic Number		Insert Arrangement Per MIL-STD-1560		

Alternate Key Position
A, B, C, D
(*Omit for Normal*)

Contact Termination
P - Pin on Jam Nut Side
S - Socket on Jam Nut Side
PP - Pin to Pin
SS - Socket to Socket

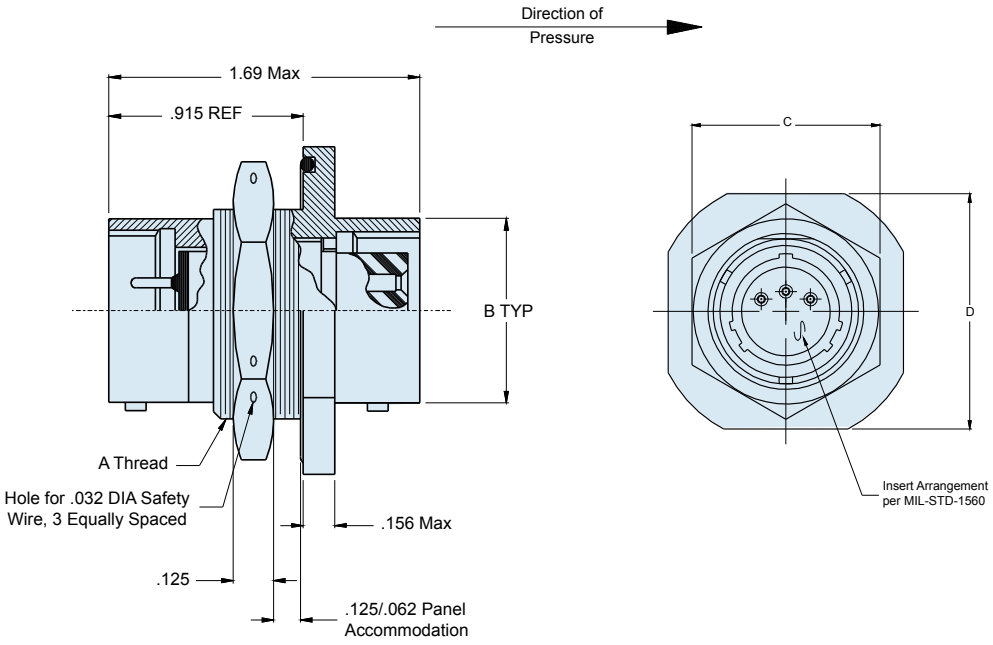

Dimensions in Inches (millimeters) are subject to change without notice.

© 2013 Glenair, Inc.

TABLE I: CONNECTOR DIMENSIONS						
SHELL SIZE	A THREAD CLASS 2A	B DIA MAX	C HEX	D FLATS	E DIA ±.005(0.1)	F +.000-.005 (0-0.1)
08	.875-20 UNEF	.474(12.0)	1.062(27.0)	1.250(31.8)	.885(22.48)	.830(21.1)
10	1.000-20 UNEF	.591(15.0)	1.188(30.2)	1.375(34.9)	1.010(25.65)	.955(24.3)
12	1.125-18 UNEF	.751(19.1)	1.312(33.3)	1.500(38.1)	1.135(28.83)	1.085(27.6)
14	1.250-18 UNEF	.876(22.3)	1.438(36.5)	1.625(41.3)	1.260(32.01)	1.210(30.7)
16	1.375-18 UNEF	1.001(25.4)	1.562(39.7)	1.781(45.2)	1.385(35.18)	1.335(33.9)
18	1.500-18 UNEF	1.126(28.6)	1.688(42.9)	1.890(48.0)	1.510(38.35)	1.460(37.1)
20	1.625-18 UNEF	1.251(31.8)	1.812(46.0)	2.016(51.2)	1.635(41.53)	1.585(40.3)
22	1.750-18 UNS	1.376(35.0)	2.000(50.8)	2.140(54.4)	1.760(44.70)	1.710(43.4)
24	1.875-16 UN	1.501(38.1)	2.125(54.0)	2.265(57.5)	1.885(47.88)	1.835(46.6)

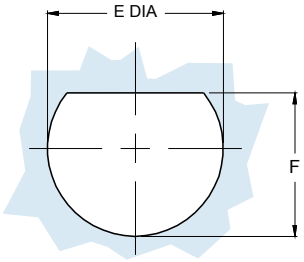

HERMETIC LEAK RATE MOD CODES	
Designator	Required Leak Rate
–585A	1 x 10^{-10} cc Helium per second
–585B	1 x 10^{-9} cc Helium per second
–585C	1 x 10^{-8} cc Helium per second

APPLICATION NOTES

1. Assembly identified with manufacturer's name and part number, space permitting.
2. For pin/pin or socket/socket, symmetrical layouts only consult factory for available insert arrangements).
3. Power to a given contact on one end will result in power to contact directly opposite, regardless of identification letter.
4. Hermeticity = less than 1 x 10^{-7} cc/sec at one atmosphere.
5. Not for use in liquid atmosphere.
6. Material/Finish:
   Shell, lock ring, jam nut, bayonet pins—stainless steel/passivate
   Contacts—copper alloy/gold plate and alloy 52/gold plate
   Insulators—high-grade rigid dielectric/N.A. and full glass
   Seals - silicone/ N.A.
7. Metric Dimensions (mm) are indicated in parentheses.

Dimensions in Inches (millimeters) are subject to change without notice.

© 2013 Glenair, Inc.
U.S. CAGE Code 06324
Printed in U.S.A.

947-278
Jam Nut Mount Hermetic Bulkhead Feed-Thru
MIL-DTL-38999 Series II Type (MS27477Y)

Product Series	Material / Finish	Insert Arrangement				Alternate Key Position
947 -	278	Z1	16 -	35	S	A
	Basic Number	Shell Size (Table I)		Contact Termination		

Material / Finish
Z1 – CRES/Passivate
ZL – CRES/Nickel Plate (Per QQ-N-290)

Insert Arrangement
Per MIL-STD-1560

Alternate Key Position
A, B, C, D
(*N* = Normal)

Basic Number

Shell Size
Table I

Contact Termination
P - Pin on Jam Nut Side
S - Socket on Jam Nut Side

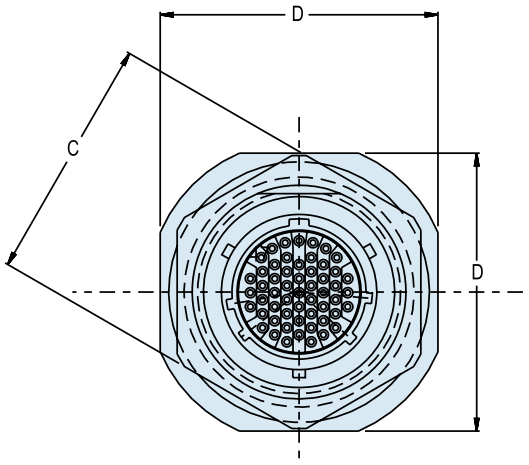

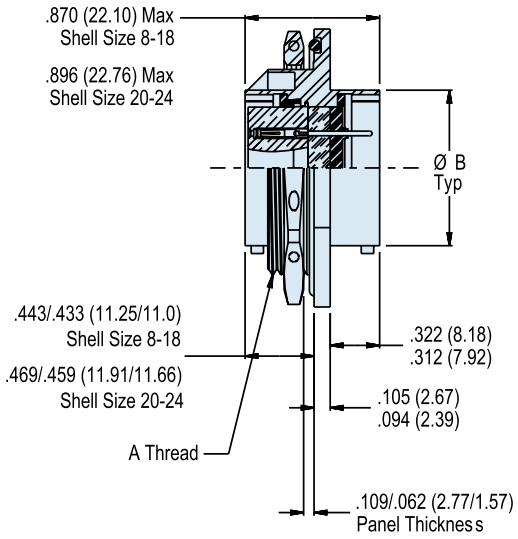

Dimensions in Inches (millimeters) are subject to change without notice.

© 2013 Glenair, Inc.
U.S. CAGE Code 06324
Printed in U.S.A.

947-278
Jam Nut Mount Hermetic Bulkhead Feed-Thru
MIL-DTL-38999 Series II Type (MS27477Y)

TABLE I: CONNECTOR DIMENSIONS						
SHELL SIZE	A THREAD CLASS 2A	B DIA MAX	C HEX	D FLATS	E DIA ±.005(0.1)	F +.000-.005 (0-0.1)
08	11/16-24 UNEF	.474(12.0)	1.062(27.0)	1.250(31.8)	.890 (22.6)	.825 (21.0)
10	13/16-20 UNEF	.591(15.0)	1.188(30.2)	1.375(34.9)	1.015 (25.8)	.950 (24.1)
12	1-20 UNEF	.751(19.1)	1.312(33.3)	1.500(38.1)	1.140 (29.0)	1.080 (27.4)
14	1 1/8-18 UNEF	.876(22.3)	1.438(36.5)	1.625(41.3)	1.265 (32.1)	1.205 (30.6)
16	1 1/4-18 UNEF	1.001(25.4)	1.562(39.7)	1.781(45.2)	1.390 (35.3)	1.330 (33.8)
18	1 3/8-18 UNEF	1.126(28.6)	1.608(40.8)	1.890(48.0)	1.515 (38.5)	1.455 (37.0)
20	1 1/2-18 UNEF	1.251(31.8)	1.812(46.0)	2.016(51.2)	1.640 (41.7)	1.580 (40.1)
22	1 5/8-18 UNEF	1.376(35.0)	2.000(50.8)	2.140(54.4)	1.765 (44.8)	1.704 (43.3)
24	1 3/4-18 UNS	1.501(38.1)	2.125(54.0)	2.265(57.5)	1.890 (48.0)	1.830 (46.5)

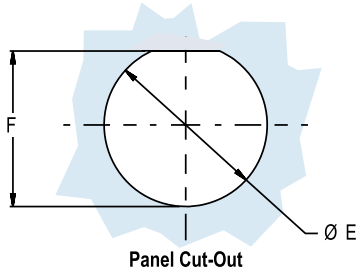

Panel Cut-Out

HERMETIC LEAK RATE MOD CODES	
Designator	Required Leak Rate
–585A	1 x 10^{-10} cc Helium per second
–585B	1 x 10^{-9} cc Helium per second
–585C	1 x 10^{-8} cc Helium per second

APPLICATION NOTES

1. Assembly identified with manufacturer's name and part number, space permitting.
2. Glenair 947-278 will mate with any QPL manufacturer's plug having the same shell size, contact arrangement and opposite contact gender.
3. Hermeticity = less than 1 x 10^{-7} cc/sec at one atmosphere.
4. Metric Dimensions (mm) are indicated in parentheses.
5. Material/Finish:
   Shell and jam nut - CRES/passivate or CRES/Nickel plate
   Contacts, pin - nickel alloy/gold plate
   Contacts, socket - copper alloy/gold plate
   Bayonets - CRES/passivate
   Insulator, pins - full glass/N.A.
   Insulator - sockets - rigid dielectric/N.A.
   Seals - Fluorosilicone blend/N.A.

Dimensions in Inches (millimeters) are subject to change without notice.

© 2013 Glenair, Inc.
U.S. CAGE Code 06324
Printed in U.S.A.

D38999/21
Box Mount Hermetic Receptacle
MIL-DTL-38999 Series III

How To Order: *MS*

Basic Specification	Connector Material / Finish	Insert Arrangement	Alternate Key Position
D38999	*N* - CRES, Nickel *Y* - CRES, Passivated	Per MIL-STD-1560; See Pages B2 - B4	*A, B, C, D, E* (*N* = Normal)

D38999	/21	Y	B	35	P	N

Shell Style
/21 - Box Mount

Shell Size

A - 9	*F* - 19
B - 11	*G* - 21
C - 13	*H* - 23
D - 15	*J* - 25
E - 17	

Contact Termination

P - Pin, Solder Cup	*S* - Socket, Solder Cup
X - Pin, Eyelet	*Z* - Socket, Eyelet
C - Pin, PCB Flex Feedthrough	*D* - Socket, PCB Flex Feedthrough

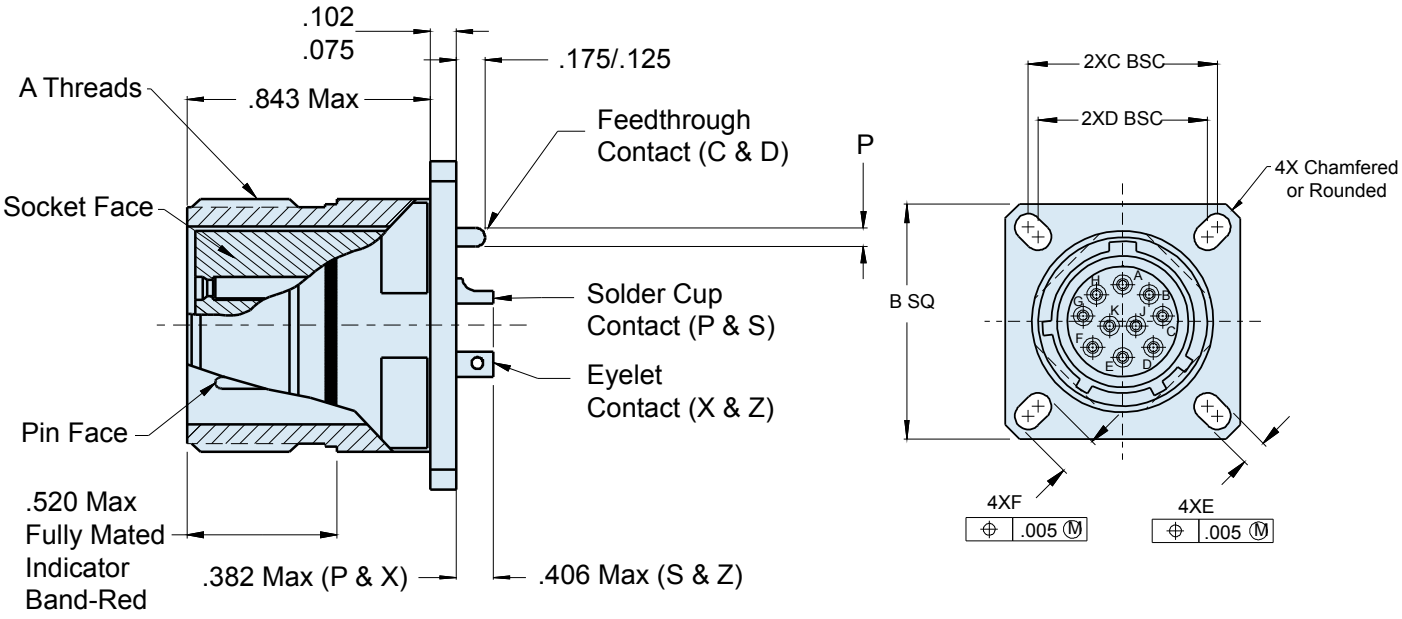

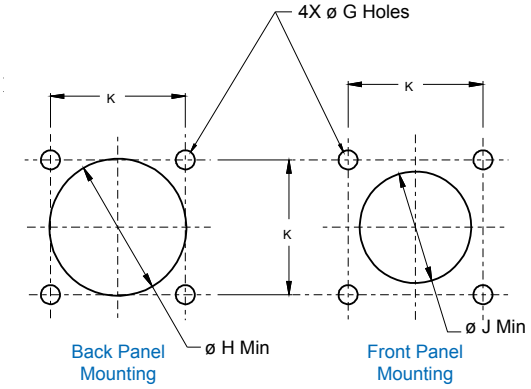

Dimensions in Inches (millimeters) are subject to change without notice.

© 2013 Glenair, Inc.

233-100-H2
Box Mount Hermetic Receptacle
MIL-DTL-38999 Series III Type

Glenair®

How To Order: *Commercial*

Connector Series	Shell Style	Shell Size	Contact Termination
233 - D38999 Series III Type	*H2 - Hermetic Box Mount*	*09,11,13,15,17,19,21,23,25*	*P - Pin, Solder Cup* *S - Socket, Solder Cup* *X - Pin, Eyelet* *Z - Socket, Eyelet* *C - Pin, PCB* *D - Socket, PCB*

233 - 100 - H2 Z1 11 - 35 P N

Connector Type	Connector Material / Finish	Insert Arrangement	Alternate Key Position
100 - Hermetic Receptacle	*ZL - CRES, Nickel* *Z1 - CRES, Passivated*	Per MIL-STD-1560; See Pages B-2 - B-4	*A, B, C, D, E* (*N* = Normal)

TABLE I: CONNECTOR DIMENSIONS

SHELL SIZE CODE	SHELL SIZE	A THREAD	B SQ ±.012(0.3)	C BSC	D BSC	E ±.008(0.2)	F ±.008(0.2)
A	9/09	.6250-.1P-.3L-TS-2A	.937(23.8)	.719(18.3)	.594(15.1)	.128(3.3)	.216(5.5)
B	11	.7500-.1P-.3L-TS-2A	1.031(26.2)	.812(20.6)	.719(18.3)	.128(3.3)	.194(4.9)
C	13	.8750-.1P-.3L-TS-2A	1.126(28.6)	.906(23.0)	.812(20.6)	.128(3.3)	.194(4.9)
D	15	1.0000-.1P-.3L-TS-2A	1.220(31.0)	.969(24.6)	.906(23.0)	.128(3.3)	.194(4.9)
E	17	1.1875-.1P-.3L-TS-2A	1.311(33.3)	1.062(27.0)	.969(24.6)	.128(3.3)	.194(4.9)
F	19	1.2500-.1P-.3L-TS-2A	1.437(36.5)	1.156(29.4)	1.062(27.0)	.128(3.3)	.194(4.9)
G	21	1.3750-.1P-.3L-TS-2A	1.563(39.7)	1.250(31.8)	1.156(29.4)	.128(3.3)	.194(4.9)
H	23	1.5000-.1P-.3L-TS-2A	1.689(42.9)	1.375(34.9)	1.250(31.8)	.154(3.9)	.242(6.1)
J	25	1.6250-.1P-.3L-TS-2A	1.811(46.0)	1.500(38.1)	1.375(34.9)	.154(3.9)	.242(6.1)

HERMETIC LEAK RATE MOD CODES

Designator	Required Leak Rate
–585A	1 x 10^{-10} cc Helium per second
–585B	1 x 10^{-9} cc Helium per second
–585C	1 x 10^{-8} cc Helium per second

WIRE ACCOMODATION

Contact Size	Wire Guage
22D	#22 - #28
20	#20 - #24
16	#16 - #20
12	#12 - #14

TABLE I (CONTINUED): CONNECTOR DIMENSIONS

SHELL SIZE CODE	SHELL SIZE	ø G HOLES ±.005(0.1)	ø H MIN	ø J MIN	K ±.005(0.1)
A	9/09	.128(3.3)	.656(16.7)	.516(13.1)	.719(18.3)
B	11	.128(3.3)	.781(19.8)	.625(15.9)	.812(20.6)
C	13	.128(3.3)	.921(23.4)	.750(19.1)	.906(23.0)
D	15	.128(3.3)	1.047(26.6)	.906(23.0)	.968(24.6)
E	17	.128(3.3)	1.218(30.9)	1.016(25.8)	1.062(27.0)
F	19	.128(3.3)	1.296(32.9)	1.142(35.9)	1.156(29.4)
G	21	.128(3.3)	1.421(36.1)	1.266(32.2)	1.250(31.8)
H	23	.154(3.9)	1.546(39.3)	1.375(34.9)	1.375(34.9)
J	25	.154(3.9)	1.672(42.5)	1.484(37.7)	1.500(38.1)

TABLE II: CONTACT SIZE

PRINTED CIRCUIT TAIL CONFIGURATIONS
CONTACT STYLE C AND D

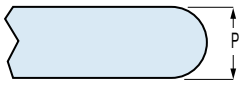

SIZE 12 AND SIZE 16

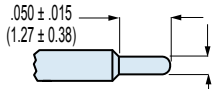

SIZE 22D AND SIZE 20

Contact Size	ø P
22D	.011 (0.28) .015 (0.38)
20	.024 (0.61) .028 (0.71)
16	.0635 (1.61) .0615 (1.56)
12	.095 (2.41) .093 (2.36)

Dimensions in Inches (millimeters) are subject to change without notice.

© 2013 Glenair, Inc.
U.S. CAGE Code 06324
Printed in U.S.A.

D38999/23
Jam Nut Mount Hermetic Receptacle
MIL-DTL-38999 Series III

How To Order: *MS*

Basic Specification	Connector Material / Finish	Insert Arrangement	Alternate Key Position
D38999	*N - CRES, Nickel* *Y - CRES, Passivated*	Per MIL-STD-1560; See Pages B2 - B4	*A, B, C, D, E* (*N* = Normal)

D38999	/23	Y	B	35	P	N

Shell Style
/23 - Jam Nut Mount

Shell Size

A - 9	*F - 19*
B - 11	*G - 21*
C - 13	*H - 23*
D - 15	*J - 25*
E - 17	

Contact Termination

P - Pin, Solder Cup	*S - Socket, Solder Cup*
X - Pin, Eyelet	*Z - Socket, Eyelet*
C - Pin, PCB Flex Feedthrough	*D - Socket, PCB Flex Feedthrough*

Non-Environmental Rear Accessory Thread Adapter Available for this Receptacle See P/N 980-002 on Page B-90

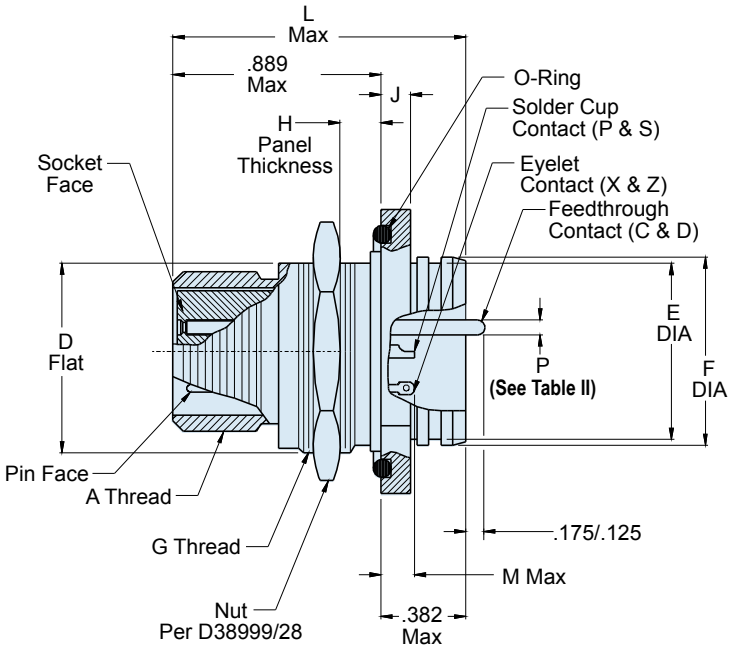

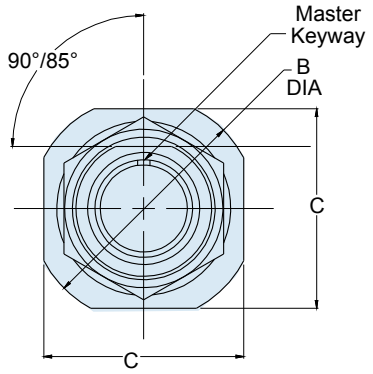

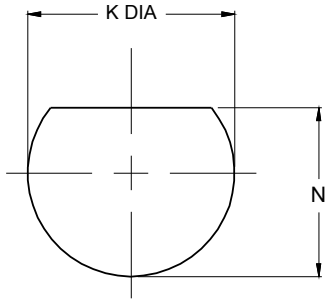

Recommended Panel Cut-Out

TABLE II: CONTACT SIZE

PRINTED CIRCUIT TAIL CONFIGURATIONS
CONTACT STYLE C AND D

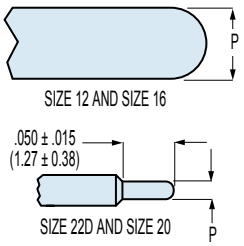

Contact Size	ø P
22D	.011 (0.28) .015 (0.38)
20	.024 (0.61) .028 (0.71)
16	.0635 (1.61) .0615 (1.56)
12	.095 (2.41) .093 (2.36)

WIRE ACCOMODATION

Contact Size	Wire Guage
22D	#22 - #28
20	#20 - #24
16	#16 - #20
12	#12 - #14

Dimensions in Inches (millimeters) are subject to change without notice.

© 2013 Glenair, Inc.

233-100-H7
Jam Nut Mount Hermetic Receptacle
MIL-DTL-38999 Series III Type

How To Order: *Commercial*

Connector Series	Shell Style	Shell Size	Contact Termination
233 - Series III Type	*H7* - Hermetic Jam Nut Mount	*09,11,13,15,17,19,21,23,25*	*P* - Pin, Solder Cup *S* - Socket, Solder Cup *X* - Pin, Eyelet *Z* - Socket, Eyelet *C* - Pin, PCB *D* - Socket, PCB

233 - 100 - H7 Z1 11 - 35 P N

Connector Type	Connector Material / Finish	Insert Arrangement	Alternate Key Position
100 - Hermetic Receptacle	*ZL* - CRES, Nickel *Z1* - CRES, Passivated	Per MIL-STD-1560; See Pages B-2 - B-4	*A, B, C, D, E* (*N* = Normal)

TABLE I: CONNECTOR DIMENSIONS

SHELL SIZE CODE	SHELL SIZE	A THREAD -0.1P-0.03L-TS	B DIA	C A/F ±.015(0.4)	D FLAT ±.005(0.1)	E DIA ±.012(0.3)	F DIA	G THREAD ISO METRIC	H ±.032(0.8)
A	9/09	0.625	1.200(30.5) 1.178(29.9)	1.063(27.0)	.650(16.5)	.603(15.3)	.653(16.6) .642(16.3)	M17 X 1.0-6g	.094(2.4)
B	11	0.750	1.385(35.2) 1.363(34.6)	1.252(31.8)	.750(19.1)	.725(18.4)	.775(19.7) .764(19.4)	M20 X 1.0-6g	.094(2.4)
C	13	0.875	1.511(38.4) 1.489(37.8)	1.374(34.9)	.937(23.8)	.851(21.6)	.905(23.0) .894(22.7)	M25 X 1.0-6g	.094(2.4)
D	15	1.000	1.637(41.6) 1.615(41.0)	1.500(38.1)	1.061(26.9)	.977(24.8)	1.031(26.2) 1.020(25.9)	M28 X 1.0-6g	.094(2.4)
E	17	1.187	1.763(44.8) 1.741(44.2)	1.626(41.3)	1.186(30.1)	1.103(28.0)	1.153(29.3) 1.142(29.0)	M32 X 1.0-6g	.094(2.4)
F	19	1.250	1.948(49.5) 1.926(48.9)	1.811(46.0)	1.311(33.3)	1.229(31.2)	1.278(32.5) 1.268(32.2)	M35 X 1.0-6g	.094(2.4)
G	21	1.375	2.074(52.7) 2.051(52.1)	1.937(49.2)	1.436(36.5)	1.351(34.3)	1.405(35.7) 1.394(35.4)	M38 X 1.0-6g	.094(2.4)
H	23	1.500	2.200(55.9) 2.177(55.3)	2.063(52.4)	1.561(39.6)	1.477(37.5)	1.531(38.9) 1.520(38.6)	M41 X 1.0-6g	.094(2.4)
J	25	1.625	2.322(59.0) 2.300(58.4)	2.189(55.6)	1.686(42.8)	1.603(40.7)	1.653(42.0) 1.642(41.7)	M44 X 1.0-6g	.094(2.4)

TABLE I: (Continued) CONNECTOR DIMENSIONS

J ±.008(0.2)	K DIA ±.005 (0.1)	L MAX	M MAX		N ±.005 (0.1)
			P&X	S&Z	
.106(2.7)	.693 (17.60)	1.149(29.2)	.208(5.3)	.232(5.9)	.657 (16.70)
.106(2.7)	.825 (20.96)	1.149(29.2)	.208(5.3)	.232(5.9)	.771 (19.59)
.106(2.7)	1.010 (25.65)	1.153(29.3)	.200(5.1)	.224(5.7)	.955 (24.26)
.106(2.7)	1.135 (28.83)	1.153(29.3)	.200(5.1)	.224(5.7)	1.085 (27.56)
.106(2.7)	1.260 (32.01)	1.153(29.3)	.200(5.1)	.224(5.7)	1.210 (30.73)
.138(3.5)	1.385 (35.18)	1.185(30.1)	.200(5.1)	.224(5.7)	1.335 (33.91)
.138(3.5)	1.510 (38.35)	1.185(30.1)	.200(5.1)	.224(5.7)	1.460 (37.08)
.138(3.5)	1.635 (41.53)	1.185(30.1)	.200(5.1)	.224(5.7)	1.585 (40.26)
.138(3.5)	1.760 (44.70)	1.185(30.1)	.200(5.1)	.224(5.7)	1.710 (43.43)

HERMETIC LEAK RATE MOD CODES

Designator	Required Leak Rate
–585A	1 x 10^{-10} cc Helium per second
–585B	1 x 10^{-9} cc Helium per second
–585C	1 x 10^{-8} cc Helium per second

Dimensions in Inches (millimeters) are subject to change without notice.

© 2013 Glenair, Inc.
U.S. CAGE Code 06324
Printed in U.S.A.

D38999/25
Solder Mount Hermetic Receptacle
MIL-DTL-38999 Series III

How To Order: *MS*

Basic Specification	Connector Material / Finish	Insert Arrangement	Alternate Key Position
D38999	*N - CRES, Nickel* *Y - CRES, Passivated*	Per MIL-STD-1560; See Pages B2 - B4	*A, B, C, D, E* (*N* = Normal)

D38999	/25	Y	B	35	P	N

Shell Style
/25 - Solder Mount

Shell Size

A - 9	*F* - 19
B - 11	*G* - 21
C - 13	*H* - 23
D - 15	*J* - 25
E - 17	

Contact Termination

P - Pin, Solder Cup	*S - Socket, Solder Cup*
X - Pin, Eyelet	*Z - Socket, Eyelet*
C - Pin, PCB Flex Feedthrough	*D - Socket, PCB Flex Feedthrough*

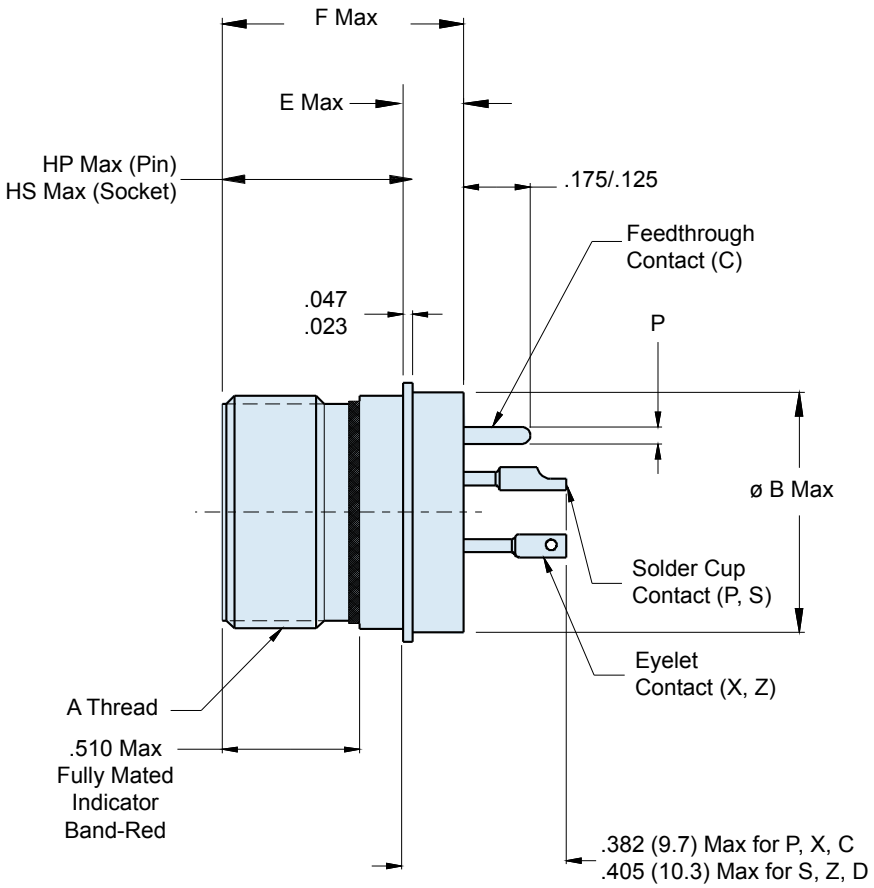

Dimensions in Inches (millimeters) are subject to change without notice.

© 2013 Glenair, Inc.

233-100-H5
Solder Mount Hermetic Receptacle
MIL-DTL-38999 Series III Type

Glenair®

How To Order: *Commercial*

Connector Series	Shell Style	Shell Size	Contact Termination
233 - Series III Type	*H5 - Hermetic Solder Mount*	*09,11,13,15,17,19,21,23,25*	*P - Pin, Solder Cup* *S - Socket, Solder Cup* *X - Pin, Eyelet* *Z - Socket, Eyelet* *C - Pin, PCB* *D - Socket, PCB*

233	-	100	-	H5	Z1	11	-	35	P	N

Connector Type	Connector Material / Finish	Insert Arrangement	Alternate Key Position
100 - Hermetic Receptacle	*ZL - CRES, Nickel* *Z1 - CRES, Passivated*	Per MIL-STD-1560; See Pages B-2 - B-4	*A, B, C, D, E* (*N* = Normal)

TABLE I: CONNECTOR DIMENSIONS

SHELL SIZE CODE	SHELL SIZE	A THREAD	ø B MAX	ø C MAX	ø D ±.005(0.1)	E MAX	F MAX	HP MAX	HS MAX
A	9/09	.6250-.1P-.3L-TS-2A	.673(17.1)	.764(19.4)	.680(17.3)	.201(5.1)	.937(23.8)	.677(17.2)	.764(19.4)
B	11	.7500-.1P-.3L-TS-2A	.783(19.9)	.858(21.8)	.789(20.0)	.201(5.1)	.937(23.8)	.677(17.2)	.764(19.4)
C	13	.8750-.1P-.3L-TS-2A	.909(23.1)	.980(24.9)	.914(23.2)	.201(5.1)	.937(23.8)	.677(17.2)	.764(19.4)
D	15	1.0000-.1P-.3L-TS-2A	1.031(26.2)	1.106(28.1)	1.038(26.4)	.201(5.1)	.937(23.8)	.677(17.2)	.764(19.4)
E	17	1.1875-.1P-.3L-TS-2A	1.157(29.4)	1.232(31.3)	1.164(29.6)	.201(5.1)	.937(23.8)	.677(17.2)	.764(19.4)
F	19	1.2500-.1P-.3L-TS-2A	1.252(31.8)	1.323(33.6)	1.258(32.0)	.201(5.1)	.937(23.8)	.677(17.2)	.764(19.4)
G	21	1.3750-.1P-.3L-TS-2A	1.378(35.0)	1.449(36.8)	1.383(35.1)	.201(5.1)	.937(23.8)	.677(17.2)	.764(19.4)
H	23	1.5000-.1P-.3L-TS-2A	1.504(38.2)	1.575(40.0)	1.508(38.3)	.232(5.9)	.969(24.6)	.677(17.2)	.764(19.4)
J	25	1.6250-.1P-.3L-TS-2A	1.626(41.3)	1.701(43.2)	1.643(41.7)	.232(5.9)	.969(24.6)	.677(17.2)	.764(19.4)

TABLE II: CONTACT SIZE

PRINTED CIRCUIT TAIL CONFIGURATIONS
CONTACT STYLE C AND D

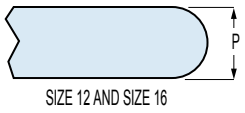

SIZE 12 AND SIZE 16

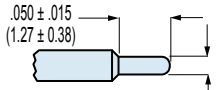

SIZE 22D AND SIZE 20

Contact Size	ø P
22D	.011 (0.28) .015 (0.38)
20	.024 (0.61) .028 (0.71)
16	.0635 (1.61) .0615 (1.56)
12	.095 (2.41) .093 (2.36)

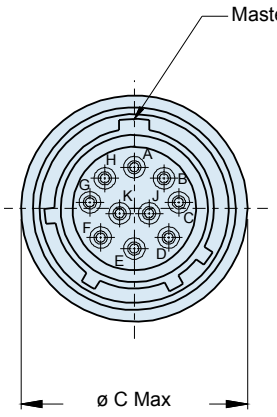

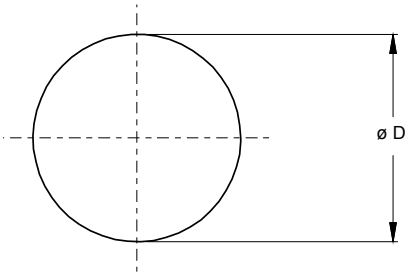

Recommended Panel
Cut-Out

WIRE ACCOMODATION	
Contact Size	Wire Guage
22D	#22 - #28
20	#20 - #24
16	#16 - #20
12	#12 - #14

HERMETIC LEAK RATE MOD CODES	
Designator	Required Leak Rate
–585A	1 x 10^{-10} cc Helium per second
–585B	1 x 10^{-9} cc Helium per second
–585C	1 x 10^{-8} cc Helium per second

Dimensions in Inches (millimeters) are subject to change without notice.

© 2013 Glenair, Inc.
U.S. CAGE Code 06324
Printed in U.S.A.

D38999/27
Weld Mount Hermetic Receptacle
MIL-DTL-38999 Series III

How To Order: *MS*

Basic Specification
D38999

Connector Material / Finish
N - CRES, Nickel
Y - CRES, Passivated

Insert Arrangement
Per MIL-STD-1560;
See Pages B2 - B4

Alternate Key Position
A, B, C, D, E
(*N* = Normal)

D38999	/27	Y	B	35	P	N

Shell Style
/27 - Weld Mount

Shell Size

A - 9	*F - 19*
B - 11	*G - 21*
C - 13	*H - 23*
D - 15	*J - 25*
E - 17	

Contact Termination

P - Pin, Solder Cup	*S - Socket, Solder Cup*
X - Pin, Eyelet	*Z - Socket, Eyelet*
C - Pin, PCB Flex Feedthrough	*D - Socket, PCB Flex Feedthrough*

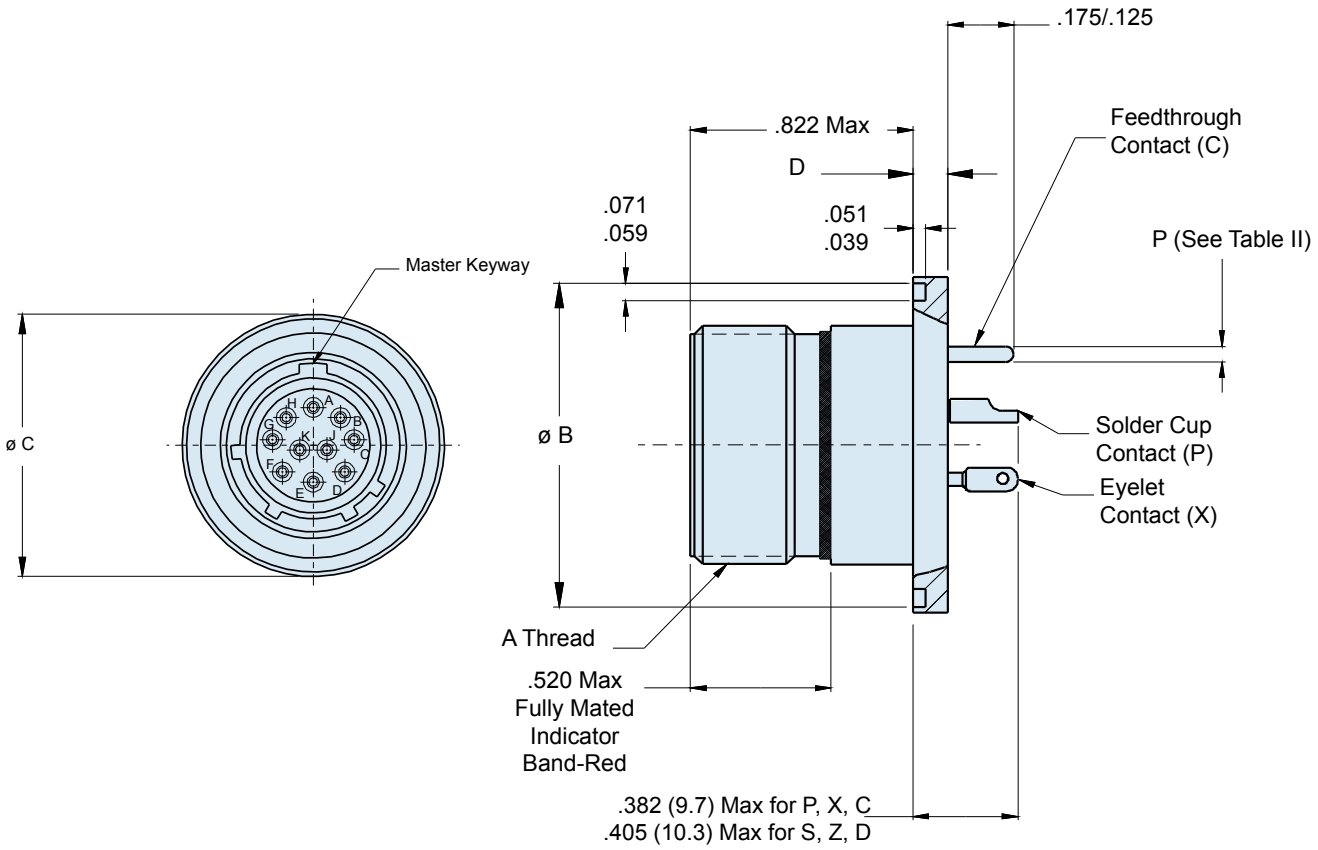

Consult Factory for Recommended Panel Cutout Dimensions

Dimensions in Inches (millimeters) are subject to change without notice.

© 2013 Glenair, Inc.
U.S. CAGE Code 06324
Printed in U.S.A.

233-100-H8
Weld Mount Hermetic Receptacle
MIL-DTL-38999 Series III Type

Glenair®

How To Order: *Commercial*

Connector Series	Shell Style	Shell Size	Contact Termination
233 - Series III Type	*H8 - Hermetic Weld Mount*	*09,11,13,15,17,19,21,23,25*	*P - Pin, Solder Cup* *S - Socket, Solder Cup* *X - Pin, Eyelet* *Z - Socket, Eyelet* *C - Pin, PCB* *D - Socket, PCB*

233	-	100	-	H8	Z1	11	-	35	P	N

Connector Type	Connector Material / Finish	Insert Arrangement	Alternate Key Position
100 - Hermetic Receptacle	*ZL - CRES, Nickel* *Z1 - CRES, Passivated*	Per MIL-STD-1560; See Pages B-2 - B-4	*A, B, C, D, E* (*N* = Normal)

HERMETIC LEAK RATE MOD CODES	
Designator	**Required Leak Rate**
–585A	1 x 10^{-10} cc Helium per second
–585B	1 x 10^{-9} cc Helium per second
–585C	1 x 10^{-8} cc Helium per second

TABLE I: CONNECTOR DIMENSIONS

SHELL SIZE CODE	SHELL SIZE	A THREAD	Ø B	Ø C	Ø D
A	9/09	.6250-.1P-.3L-TS-2A	.941 (23.9) .929 (23.6)	.984 (25.0) .972 (24.7)	.134 (3.4) .118 (3.0)
B	11	.7500-.1P-.3L-TS-2A	1.063 (27.0) 1.051 (27.0)	1.106 (28.1) 1.094 (27.8)	.134 (3.4) .118 (3.0)
C	13	.8750-.1P-.3L-TS-2A	1.189 (30.2) 1.177 (28.9)	1.232 (31.3) 1.220 (31.0)	.134 (3.4) .118 (3.0)
D	15	1.0000-.1P-.3L-TS-2A	1.315 (33.4) 1.303 (33.1)	1.358 (34.5) 1.346 (34.2)	.134 (3.4) .118 (3.0)
E	17	1.1875-.1P-.3L-TS-2A	1.402 (35.6) 1.390 (35.3)	1.445 (36.7) 1.433 (36.4)	.134 (3.4) .118 (3.0)
F	19	1.2500-.1P-.3L-TS-2A	1.547 (39.3) 1.535 (39.0)	1.591 (40.4) 1.579 (40.1)	.134 (3.4) .118 (3.0)
G	21	1.3750-.1P-.3L-TS-2A	1.689 (42.9) 1.677 (42.6)	1.732 (44.0) 1.720 (43.7)	.134 (3.4) .118 (3.0)
H	23	1.5000-.1P-.3L-TS-2A	1.854 (47.1) 1.842 (46.8)	1.898 (48.2) 1.886 (47.4)	.165 (4.2) .149 (3.8)
J	25	1.6250-.1P-.3L-TS-2A	1.941 (49.3) 1.929 (49.0)	1.984 (50.4) 1.972 (50.1)	.165 (4.2) .149 (3.8)

TABLE II: CONTACT SIZE

PRINTED CIRCUIT TAIL CONFIGURATIONS
CONTACT STYLE C AND D

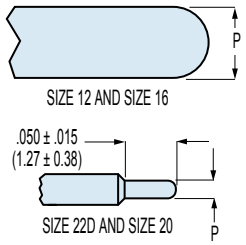

Contact Size	ø P
22D	.011 (0.28) .015 (0.38)
20	.024 (0.61) .028 (0.71)
16	.0635 (1.61) .0615 (1.56)
12	.095 (2.41) .093 (2.36)

WIRE ACCOMODATION	
Contact Size	**Wire Guage**
22D	#22 - #28
20	#20 - #24
16	#16 - #20
12	#12 - #14

Dimensions in Inches (millimeters) are subject to change without notice.

© 2013 Glenair, Inc.
U.S. CAGE Code 06324
Printed in U.S.A.

233-103-H7
Jam Nut Mount Hermetic Bulkhead Feed-Thru
MIL-DTL-38999 Series III Type

Connector Series
233 - D38999 Series III Type

Shell Style
H7 - Jam Nut Mount

Shell Size
09
11
13
15
17
19
21
23
25

Insert Arrangement
Per MIL-DTL-38999 Series III
MIL-STD-1560

Alternate Key Position
A, B, C, D, E
(*N* = Normal)

233 - 103 - H7 Z1 11 - 35 P N - 01

Connector Type
103 - Hermetic Bulkhead Feed-Thru

Connector Material and Finish
Z1 - CRES, Passivated
ZL - CRES, Nickel Finish

Contact Termination
P - Pin on Jam Nut Side
S - Socket on Jam Nut Side

Panel Accomodation
01 - .0625" (Min) .125" (Max)
02 - .0625" (Min) .250" (Max)
03 - .0625" (Min) .500" (Max)

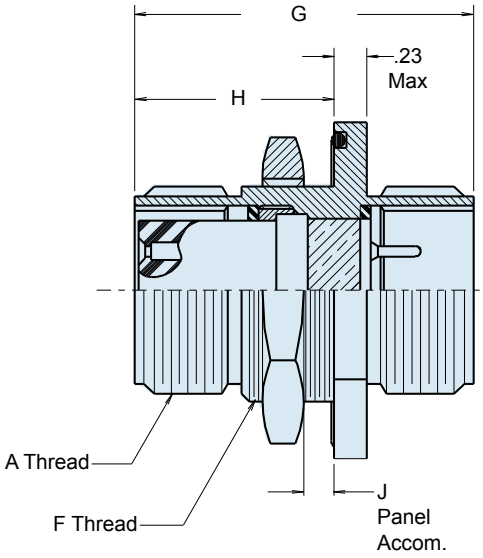

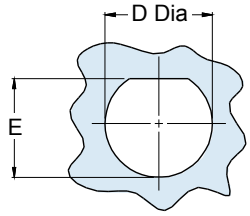

Recommended Panel Cut-Out

HERMETIC LEAK RATE MOD CODES	
Designator	**Required Leak Rate**
–585A	1 x 10^{-10} cc Helium per second
–585B	1 x 10^{-9} cc Helium per second
–585C	1 x 10^{-8} cc Helium per second

TABLE I: CONNECTOR DIMENSIONS

	G Dim, OAL	H Dim, Max	J Dim, Panel
-01	**1.650 (41.91) Max**	**.889 (22.58)**	.125 (3.18) .062 (1.57)
-02	**1.780 (45.21) Max**	**1.090 (27.69)**	.250 (6.35) .062 (1.57)
-03	**2.030 (51.56) Max**	**1.340 (34.04)**	.500 (12.7) .062 (1.57)

TABLE II: CONNECTOR DIMENSIONS

SHELL SIZE	A THREAD 0.1 P-0.3L-TS-2	B DIA	C	D DIA	E DIM	F THREAD METRIC
09	**.6250**	**1.189 (30.20)**	**1.063 (27.00)**	.703 (17.86) .693 (17.60)	.657 (16.69) .655 (16.64)	**M17 x 1.0-6g**
11	**.7500**	**1.375 (34.93)**	**1.252 (31.80)**	.835 (21.21) .825 (20.96)	.771 (19.58) .769 (19.53)	**M20 x 1.0-6g**
13	**.8750**	**1.500 (38.10)**	**1.374 (34.90)**	1.020 (25.91) 1.010 (25.65)	.955 (24.26) .953 (24.21)	**M25 x 1.0-6g**
15	**1.0000**	**1.626 (41.30)**	**1.500 (38.10)**	1.145 (29.03) 1.135 (28.83)	1.085 (27.56) 1.083 (27.51)	**M28 x 1.0-6g**
17	**1.1875**	**1.752 (44.50)**	**1.626 (41.30)**	1.270 (32.26) 1.260 (32.00)	1.210 (30.73) 1.208 (30.68)	**M32 x 1.0-6g**
19	**1.2500**	**1.937 (49.20)**	**1.811 (46.00)**	1.395 (35.43) 1.385 (35.18)	1.335 (33.91) 1.333 (33.86)	**M35 x 1.0-6g**
21	**1.3750**	**2.063 (52.40)**	**1.937 (49.20)**	1.520 (38.61) 1.510 (38.35)	1.460 (37.08) 1.458 (37.03)	**M38 x 1.0-6g**
23	**1.5000**	**2.189 (55.60)**	**2.063 (52.40)**	1.645 (41.78) 1.635 (41.53)	1.585 (40.26) 1.583 (40.21)	**M41 x 1.0-6g**
25	**1.6250**	**2.311 (58.70)**	**2.189 (55.60)**	1.769 (44.93) 1.759 (44.68)	1.710 (43.34) 1.708 (43.38)	**M44 x 1.0-6g**

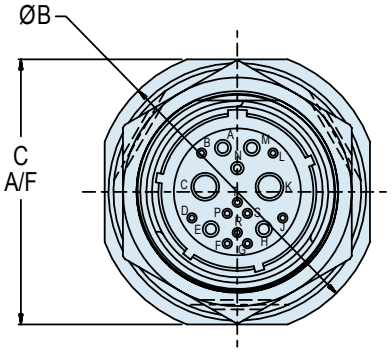

Insert Arrangement per
MIL-DTL-38999 Series III
MIL-STD-1560

APPLICATION NOTES

1. Power to a given contact on one end will result in power to contact directly opposite, regardless of identification letter.
2. Hermeticity = less than 1 x 10^{-7} cc/sec at one atmosphere. Not for use in liquid atmosphere.
3. Material/finish:
   Shell, nut – CRES/passivated or CRES/nickel per QQ-N-290.
   Contacts – Gold Plated. Pin: alloy 52; Skt.: copper alloy
   Insulator, hermetic – fused vitreous glass/N.A.
   Insulator, socket – rigid dielectric.
   Seals – fluorosilicone rubber/N.A.
4. Metric dimensions (mm) are indicated in parentheses.

Dimensions in Inches (millimeters) are subject to change without notice.

© 2013 Glenair, Inc.

233-103-H9
Jam Nut Mount Hermetic
Plug/Receptacle Bulkhead Feed-Thru
for MIL-DTL-38999 Series III Type

Glenair®

Connector Series
233 - D38999 Series III Type

Connector Type
103 - Hermetic Bulkhead Feed-Thru

Shell Size
09
11
13
15
17
19
21
23
25

Insert Arrangement
Per MIL-DTL-38999 Series III
MIL-STD-1560

Contact Termination
P - Pin on Plug Side
S - Socket on Plug Side

233 - 103 - H9 P 11 - 35 P N - 01

Shell Style
H9 - Jam Nut Mount Plug/ Receptacle Gender Changer

Alternate Positions:
A, B, C, D, E
(*N* = Normal)

Connector Material and Finish
Z1 - CRES, Passivated
ZL - CRES, Nickel Finish

Panel Accomodation
01 - .0625" (Min) .125" (Max)
02 - .0625" (Min) .250" (Max)
03 - .0625" (Min) .500" (Max)

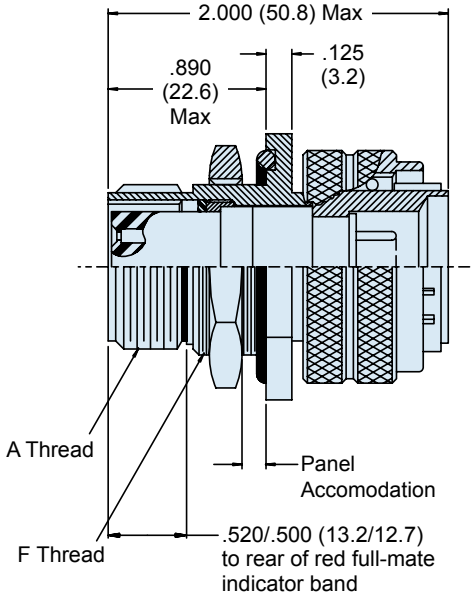

HERMETIC LEAK RATE MOD CODES	
Designator	**Required Leak Rate**
–585A	1 x 10^{-10} cc Helium per second
–585B	1 x 10^{-9} cc Helium per second
–585C	1 x 10^{-8} cc Helium per second

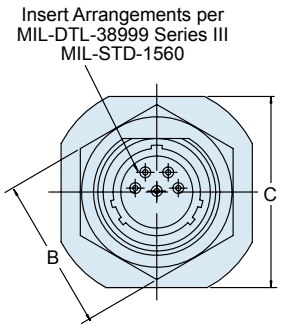

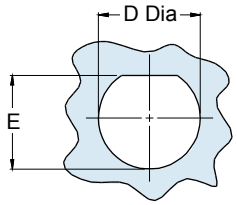

Recommended Panel Cut-Out

TABLE I: CONNECTOR DIMENSIONS

SHELL SIZE	A THREAD 0.1 P-0.3L-TS-2	B DIM	C DIM MAX	D DIA	E DIA	F THREAD x1-6g-0.100R
9	.6250	.945(24.0)	1.090(27.7)	.693 (17.60)	.657 (16.70)	M17
11	.7500	1.063(27.0)	1.280(32.5)	.825 (20.96)	.771 (19.59)	M20
13	.8750	1.260(32.0)	1.400(35.6)	1.010 (25.65)	.955 (24.26)	M25
15	1.0000	1.417(36.0)	1.530(38.9)	1.135 (28.83)	1.085 (27.56)	M28
17	1.1875	1.457(37.0)	1.660(42.2)	1.260 (32.01)	1.210 (30.73)	M32
19	1.2500	1.614(41.0)	1.840(46.7)	1.385 (35.18)	1.335 (33.91)	M35
21	1.3750	1.811(46.0)	1.970(50.5)	1.510 (38.35)	1.460 (37.08)	M38
23	1.5000	1.968(50.0)	2.090(53.1)	1.635 (41.53)	1.585 (40.26)	M41
25	1.6250	2.017(51.2)	2.210(56.1)	1.760 (44.70)	1.710 (43.43)	M44

APPLICATION NOTES

1. Power to a given contact on one end will result in power to contact directly opposite, regardless of identification letter.
2. Hermeticity = less than 1 x 10^{-7} cc/sec at one atmosphere. Not for use in liquid atmosphere.
3. Material/finish:
   Shell, nut – CRES/passivated, carbon steel/fused tin or CRES/nickel per QQ-N-290.
   Contacts – Gold Plated. Pin: alloy 52; Skt.: copper alloy
   Insulator – fused vitreous glass/N.A.
   Seals – fluorosilicone rubber/N.A.
4. Metric dimensions (mm) are indicated in parentheses.

Dimensions in Inches (millimeters) are subject to change without notice.

© 2013 Glenair, Inc.
U.S. CAGE Code 06324
Printed in U.S.A.

237-033
Jam Nut Mount Hermetic with Double O-Rings
Plug/Receptacle Bulkhead Feedthrough for MIL-DTL-38999 Series III Type

Connector Material and Finish
Z1 - CRES, Passivated
P - CRES, Nickel Finish

Insert Arrangement
Per MIL-DTL-38999 Series III MIL-STD-1560

Polarization
A, B, C, D, E
(*N* = Normal)

Connector Series
233 - D38999 Series III Type

237	-	033	Z1	9	-	35	D	N

Connector Type
003 - Hermetic Bulkhead Feedthrough

Shell Size
(See Table I)

Contact Termination Style
P - Pin, Solder Cup
X - Pin, Eyelet
C - Pin, PCB
S - Socket, Solder Cup
Z - Socket, Eyelet
D - Socket, Feedthrough

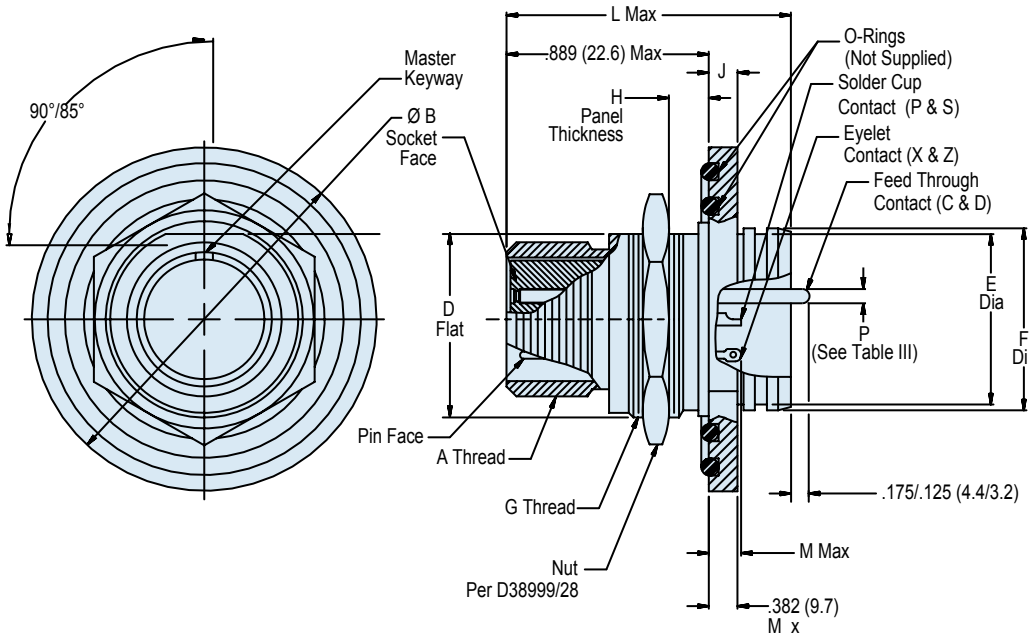

Dimensions in Inches (millimeters) are subject to change without notice.

© 2013 Glenair, Inc.
U.S. CAGE Code 06324
Printed in U.S.A.

237-033
Jam Nut Mount Hermetic with Double O-Rings
Plug/Receptacle Bulkhead Feedthrough
for MIL-DTL-38999 Series III Type

Glenair®

TABLE I: Shell Size, Thread and Connector Dimensions (Continued Below)

Shell Size Code	Shell Size	A Thread -0.1P-0.03L-TS	B Dia	D Flat	E Dia	F Dia	G Thread ISO Metric x 1.0-6g
A	9	.6250	1.270/1.260 (32.26/32.00)	.654/.645 (16.61/16.38)	.614/.591 (15.60/15.01)	.653/.642 (16.59/16.31)	M17
B	11	.7500	1.385/1.375 (35.18/34.93)	.754/.745 (19.15/18.92)	.736/.713 (18.69/18.11)	.775/.764 (19.69/19.41)	M20
C	13	.8750	1.585/1.575 (40.26/40.01)	.941/.932 (23.90/23.67)	.862/.839 (21.89/21.31)	.905/.894 (22.99/22.71)	M25
D	15	1.0000	1.700/1.690 (43.18/42.93)	1.065/1.056 (27.05/26.82)	.988/.965 (25.10/24.51)	1.031/1.020 (26.19/25.91)	M28
E	17	1.1875	1.860/1.850 (47.24/46.99)	1.190/1.181 (30.23/30.00)	1.114/1.091 (28.30/27.71)	1.153/1.142 (29.29/29.01)	M32 (See Note 2)
F	19	1.2500	1.975/1.965 (50.17/49.91)	1.315/1.306 (33.40/33.17)	1.240/1.217 (31.50/30.91)	1.278/1.268 (32.46/32.21)	M35
G	21	1.3750	2.095/2.085 (53.21/52.96)	1.440/1.431 (36.58/36.35)	1.362/1.339 (34.59/34.01)	1.405/1.394 (35.69/35.41)	M38
H	23	1.5000	2.213/2.203 (56.21/55.96)	1.565/1.556 (39.75/39.52)	1.488/1.465 (37.80/37.21)	1.531/1.520 (38.89/38.61)	M41
J	25	1.6250	2.325/2.315 (59.06/58.80)	1.690/1.681 (42.93/42.70)	1.614/1.591 (41.0/40.41)	1.653/1.642 (41.99/41.71)	M44

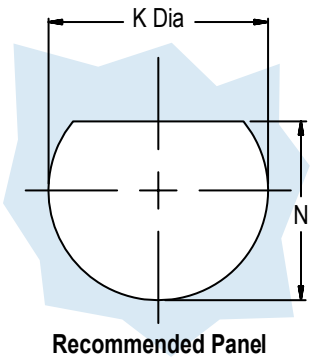

Recommended Panel Cut-out

TABLE I: (Continued from Above)

Shell Size Code	Shell Size	H	J	K Dia	L Max	M Max		N
						P and X	S and Z	
A	9	.125/.062 (3.18/1.57)	.114/.098 (2.90/2.49)	.710/.700 (18.03/17.78)	1.149 (29.18)	.208 (5.28)	.232 (5.89)	.670/.660 (17.02/16.76)
B	11	.125/.062 (3.18/1.57)	.114/.098 (2.90/2.49)	.832/.822 (21.13/20.88)	1.149 (29.18)	.208 (5.28)	.232 (5.89)	.769/.759 (19.53/19.28)
C	13	.125/.062 (3.18/1.57)	.114/.098 (2.90/2.49)	1.017/1.007 (25.83/25.58)	1.153 (29.29)	.200 (5.08)	.224 (5.69)	.955/.945 (24.26/24.0)
D	15	.125/.062 (3.18/1.57)	.114/.098 (2.90/2.49)	1.144/1.134 (29.06/28.80)	1.153 (29.29)	.200 (5.08)	.224 (5.69)	1.084/1.074 (27.53/27.28)
E	17	.125/.062 (3.18/1.57)	.114/.098 (2.90/2.49)	1.271/1.261 (32.28/32.03)	1.153 (29.29)	.200 (5.08)	.224 (5.69)	1.208/1.198 (30.68/30.4)
F	19	.125/.062 (3.18/1.57)	.146/.130 (3.71/3.30)	1.394/1.384 (35.41/35.15)	1.185 (30.10)	.200 (5.08)	.224 (5.69)	1.333/1.323 (33.86/33.60)
G	21	.125/.062 (3.18/1.57)	.146/.130 (3.71/3.30)	1.517/1.507 (38.53/28.28)	1.185 (30.10)	.200 (5.08)	.224 (5.69)	1.459/1.449 (37.06/36.80)
H	23	.125/.062 (3.18/1.57)	.146/.130 (3.71/3.30)	1.644/1.634 (41.76/41.50)	1.185 (30.10)	.200 (5.08)	.224 (5.69)	1.580/1.570 (40.13/39.88)
J	25	.125/.062 (3.18/1.57)	.146/.130 (3.71/3.30)	1.746/1.736 (44.35/44.09)	1.185 (30.10)	.200 (5.08)	.224 (5.69)	1.709/1.699 (43.41/43.15)

TABLE III: Contact Size and Diameter

Contact Size	Ø P
22D	.011/.015 (0.28/0.38)
20	.024/.028 (0.61/0.71)
16	.0635/.0615 (1.61/1.56)
12	.095/.093 (2.41/2.36)
10	.126/.124 (3.20/3.15)

APPLICATION NOTES

1. Assembly identified with manufacturer's name and P/N, space permitting.
2. Modified major diameter 31.95-31.80 (1.257-1.252).
3. Glenair 237-033 receptacle conector is designed to mate with and QPL manufacturer's MIL-DTL-38999 Series III plug connector having the same insert arrangement and polarization.
4. Glenair 237-033 same as D38999/23 except double O-Ring configuration.
5. Material/finish:
   Shell, nut – CRES/passivated or CRES/nickel per QQ-N-290.
   Contacts – Nickel iron alloy 52/gold.
   Insulator – fused vitreous glass/N.A.
   Seals – fluorosilicone rubber/N.A.
6. Metric dimensions (mm) are indicated in parentheses.

Dimensions in Inches (millimeters) are subject to change without notice.

© 2013 Glenair, Inc.
U.S. CAGE Code 06324
Printed in U.S.A.

237-063
Special Hermetic Jam Nut Mount Receptacle
Bulkhead Feed-Thru with P.C. Tail Contacts for MIL-DTL-38999 Series III Type

Connector Material and Finish
Z1 - CRES, Passivated
ZW - CRES, Fused Tin Plate
P - CRES, Nickel Finish

Insert Arrangement
Per MIL-DTL-38999 Series III MIL-STD-1560

Polarization
A, B, C, D, E
(N = Normal)

Connector Series
237 - D38999 Series III Type

237	-	063	Z1	9	-	35	C	N

Connector Type
063 - Hermetic Bulkhead Feed-Thru

Shell Size
(See Table I)

Contact Termination Style
C - Pin, PCB

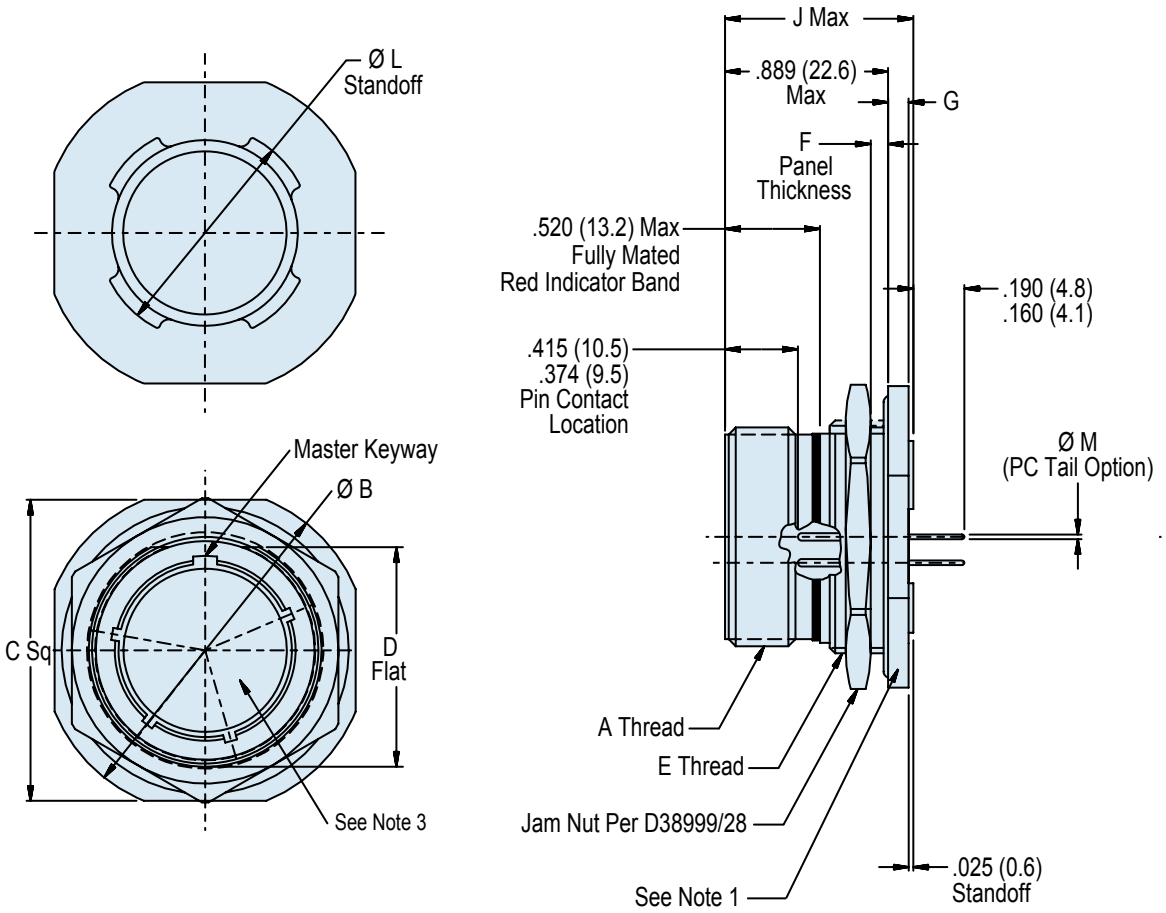

Dimensions in Inches (millimeters) are subject to change without notice.

© 2013 Glenair, Inc.

237-063
Special Hermetic Jam Nut Mount Receptacle
Bulkhead Feed-Thru with P.C. Tail Contacts for MIL-DTL-38999 Series III Type

Glenair®

TABLE I: Shell Size, Thread and Connector Dimensions (Continued Below)

Shell Size Code	Shell Size	A Thread -0.1P-0.03L-TS	B Dia	C A/F	D Flat	E Thread ISO Metric x 1.0-6g
A	9	.6250	1.200/1.178 (30.48/29.92)	1.078/1.048 (27.38/26.62)	.654/.645 (16.61/16.38)	M17
B	11	.7500	1.385/1.363 (35.18/34.62)	1.267/1.237 (32.18/31.42)	.754/.745 (19.15/18.92)	M20
C	13	.8750	1.511/1.489 (38.38/37.82)	1.389/1.359 (35.28/34.52)	.941/.932 (23.90/23.67)	M25
D	15	1.0000	1.637/1.615 (41.58/41.02)	1.515/1.485 (38.48/37.72)	1.065/1.056 (27.05/26.82)	M28
E	17	1.1875	1.763/1.741 (44.78/44.22)	1.641/1.611 (41.68/40.92)	1.190/1.181 (30.23/30.00)	M32 (See Note 2)
F	19	1.2500	1.948/1.926 (49.48/48.92)	1.826/1.796 (46.38/45.62)	1.315/1.306 (33.40/33.17)	M35
G	21	1.3750	2.074/2.051 (52.68/52.10)	1.952/1.922 (49.58/48.82)	1.440/1.431 (36.58/36.35)	M38
H	23	1.5000	2.200/2.177 (55.88/55.30)	2.078/2.048 (52.78/52.02)	1.565/1.556 (39.75/39.52)	M41
J	25	1.6250	2.322/2.300 (58.98/58.42)	2.204/2.174 (55.98/55.22)	1.690/1.681 (42.93/42.70)	M44

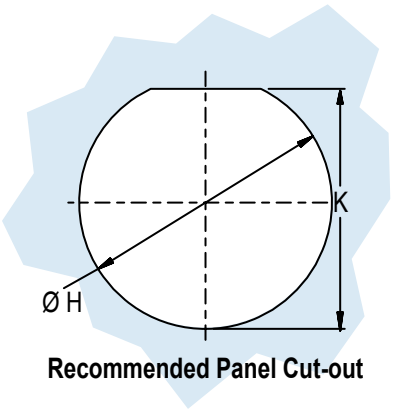

Recommended Panel Cut-out

TABLE I: (Continued from Above)

Shell Size Code	Shell Size	F	G	H Dia	J Max	K	L Dia
A	9	.125/.062 (3.18/1.57)	.113/.108 (2.87/2.74)	.710/.700 (18.03/17.78)	1.149 (29.18)	.670/.660 (17.02/16.76)	.653/.642 (16.59/16.31)
B	11	.125/.062 (3.18/1.57)	.113/.108 (2.87/2.74)	.832/.822 (21.13/20.88)	1.149 (29.18)	.769/.759 (19.53/19.28)	.775/.764 (19.69/19.41)
C	13	.125/.062 (3.18/1.57)	.113/.108 (2.87/2.74)	1.017/1.007 (25.83/25.58)	1.153 (29.29)	.955/.945 (24.26/24.0)	.905/.894 (22.99/22.71)
D	15	.125/.062 (3.18/1.57)	.113/.108 (2.87/2.74)	1.144/1.134 (29.06/28.80)	1.153 (29.29)	1.084/1.074 (27.53/27.28)	1.031/1.020 (26.19/25.91)
E	17	.125/.062 (3.18/1.57)	.113/.108 (2.87/2.74)	1.271/1.261 (32.28/32.03)	1.153 (29.29)	1.208/1.198 (30.68/30.4)	1.153/1.142 (29.29/29.01)
F	19	.125/.062 (3.18/1.57)	.145/.133 (3.68/3.38)	1.394/1.384 (35.41/35.15)	1.185 (30.10)	1.333/1.323 (33.86/33.60)	1.279/1.268 (32.49/32.21)
G	21	.125/.062 (3.18/1.57)	.145/.133 (3.68/3.38)	1.517/1.507 (38.53/28.28)	1.185 (30.10)	1.459/1.449 (37.06/36.80)	1.405/1.394 (35.69/35.41)
H	23	.125/.062 (3.18/1.57)	.145/.133 (3.68/3.38)	1.644/1.634 (41.76/41.50)	1.185 (30.10)	1.580/1.570 (40.13/39.88)	1.531/1.520 (38.89/38.61)
J	25	.125/.062 (3.18/1.57)	.145/.133 (3.68/3.38)	1.769/1.759 (44.93/44.68)	1.185 (30.10)	1.709/1.699 (43.41/43.15)	1.653/1.642 (41.99/41.71)

TABLE III: Contact Size and Diameter

Contact Size	Ø P
22	.022/.018 (0.56/0.46)
20	.027/.023 (0.69/0.58)
16	.042/.038 (1.07/0.97)
12	.052/.048 (1.32/1.22)

APPLICATION NOTES

1. Assembly identified with manufacturer's name and P/N, space permitting.
2. Modified major diameter 31.95-31.80 (1.257-1.252).
3. Insert arrangements in accordance with MIL-STD-1560.
4. Metric dimensions (mm) are indicated in parentheses.
5. Material/finish:
   Shell, jam nut – CRES/passivated or CRES/nickel per QQ-N-290.
   Contacts – Nickel iron alloy 52/gold plated.
   Insulator – fused vitreous glass/N.A.
   Seals – fluorosilicone rubber/N.A.

Dimensions in Inches (millimeters) are subject to change without notice.

© 2013 Glenair, Inc.
U.S. CAGE Code 06324
Printed in U.S.A.

237-153
Hermetic Dual Flange Jam Nut Mount Receptacle
for MIL-DTL-38999 Series III Type

Connector Material and Finish
Z1 - CRES, Passivated
ZL - CRES, Nickel Plate
ZW - CRES, Cadmium, O.D.

Insert Arrangement
Per MIL-DTL-38999 Series III MIL-STD-1560

Polarization
A, B, C, D, E
(N = Normal)

Connector Series
237 - D38999 Series III Type

237	-	153	Z1	15	-	18	C	N

Connector Type
153 - Hermetic Dual Flange Jam Nut Mount

Shell Size
(See Table I)

Contact Termination Style
C - Pin Face, PCB Termination
D - Socket Face, PCB Termination

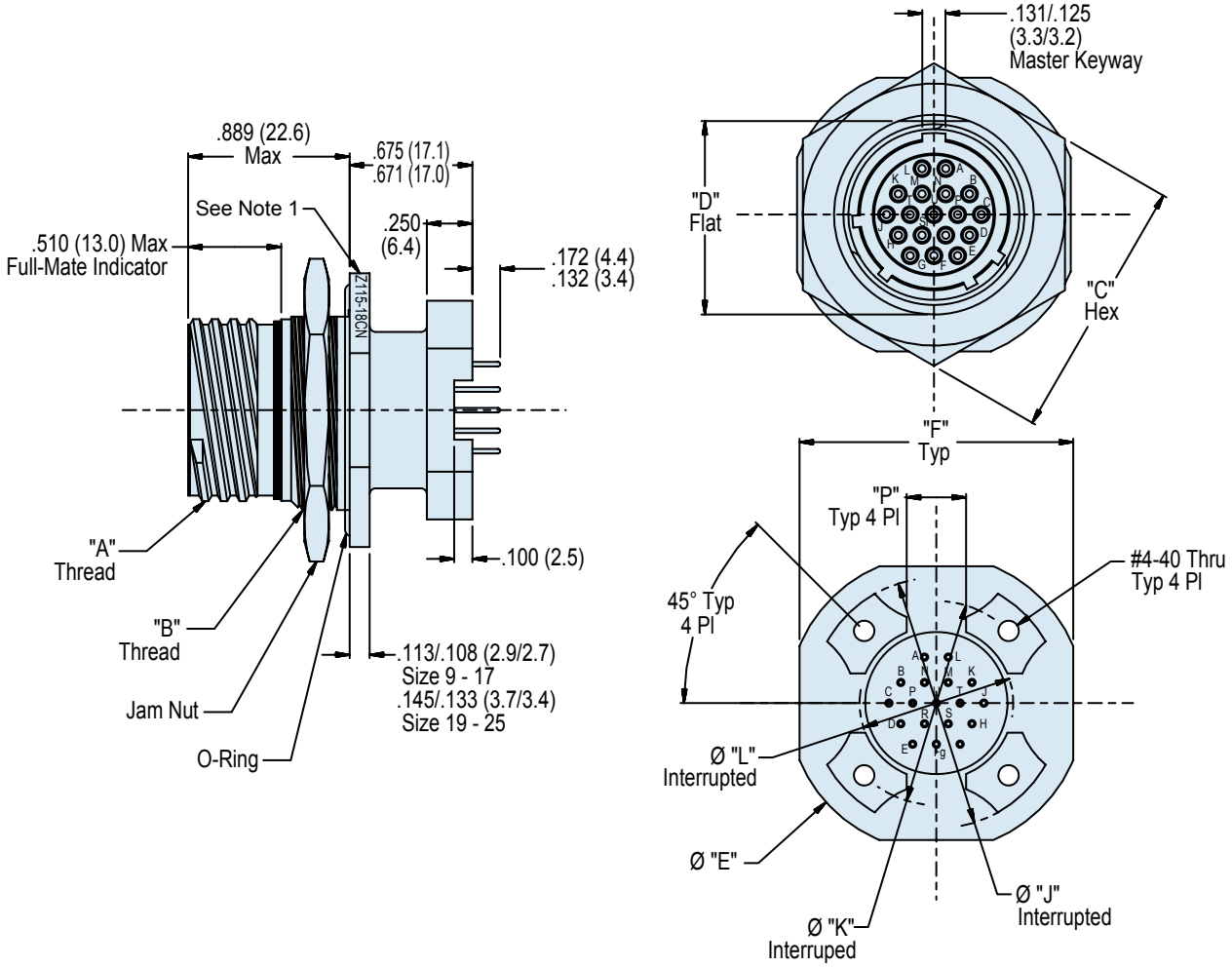

Dimensions in Inches (millimeters) are subject to change without notice.

© 2013 Glenair, Inc.
U.S. CAGE Code 06324
Printed in U.S.A.

237-153
Hermetic Dual Flange Jam Nut Mount Receptacle
for MIL-DTL-38999 Series III Type

Glenair®

TABLE I: Shell Size, Thread and Connector Dimensions (Continued Below)						
Shell Size	A Thread -0.1P-0.03L-TS (Plated)	B Thread Metric (Plated)	C ± .015 (0.38)	D ± .005 (0.13)	Ø E ± .012 (0.30)	F ± .016 (0.41)
9	.6250	M17 x 1-6g-0.10R	.875 (22.2)	.651 (16.5)	1.250 (31.8)	1.063 (27.0)
11	.7500	M20 x 1-6g-0.10R	1.000 (25.4)	.751 (19.1)	1.377 (35.0)	1.259 (32.0)
13	.8750	M25 x 1-6g-0.10R	1.187 (30.1)	.937 (23.8)	1.500 (38.1)	1.374 (34.9)
15	1.0000	M28 x 1-6g-0.10R	1.375 (34.9)	1.063 (27.0)	1.625 (41.3)	1.500 (38.1)
17	1.1875	M32 x 1-6g-0.10R	1.437 (36.5)	1.187 (30.2)	1.750 (44.5)	1.625 (41.3)
19	1.2500	M35 x 1-6g-0.10R	1.562 (39.7)	1.311 (33.3)	1.937 (49.2)	1.822 (46.3)
21	1.3750	M38 x 1-6g-0.10R	1.750 (44.5)	1.434 (36.4)	2.063 (52.4)	1.940 (49.3)
23	1.5000	M41 x 1-6g-0.10R	1.875 (47.6)	1.561 (39.7)	2.190 (55.6)	2.073 (52.7)
25	1.6250	M44 x 1-6g-0.10R	2.000 (50.8)	1.687 (42.9)	2.311 (58.7)	2.189 (55.6)

TABLE III: Contact Size and Diameter	
Contact Size	Ø P
22	.022/.018 (0.56/0.46)
20	.027/.023 (0.69/0.58)
16	.042/.038 (1.07/0.97)
12	.052/.048 (1.32/1.22)

TABLE I: Shell Size, Thread and Connector Dimensions (Continued from Above)						
Shell Size	H ± .020 (0.51)	Ø J ± .005 (0.13)	Ø K Basic	L ± .005 (0.13)	N ± .020 (0.51)	P ± .010 (0.25)
9	.225 (5.7)	1.016 (25.8)	.752 (19.1)	.532 (13.5)	.275 (7.0)	.225 (5.7)
11	.250 (6.4)	1.062 (27.0)	.850 (21.6)	.595 (15.1)	.290 (7.4)	.250 (6.4)
13	.375 (9.5)	1.250 (31.8)	.994 (25.2)	.720 (18.3)	.370 (9.4)	.250 (6.4)
15	.438 (11.1)	1.375 (34.9)	1.119 (28.4)	.843 (21.4)	.440 (11.2)	.325 (8.2)
17	.562 (14.3)	1.500 (38.1)	1.237 (31.4)	1.000 (25.4)	.495 (12.6)	.375 (9.5)
19	.875 (22.2)	1.625 (41.3)	1.379 (35.0)	1.125 (28.6)	.540 (13.7)	.500 (12.7)
21	1.170 (29.7)	1.750 (44.5)	1.489 (37.8)	1.240 (31.5)	.625 (15.9)	.562 (14.3)
23	1.250 (31.8)	1.875 (47.6)	1.619 (41.1)	1.328 (33.7)	.660 (16.8)	.688 (17.5)
25	1.375 (34.9)	2.000 (50.8)	1.744 (44.3)	1.453 (36.9)	.740 (18.8)	.750 (19.1)

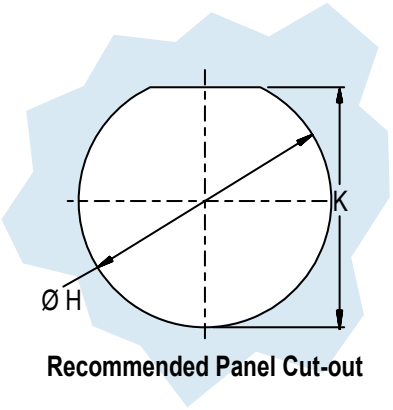

Recommended Panel Cut-out

APPLICATION NOTES

1. Assembly identified with manufacturer's name and P/N, space permitting.
2. Performance test criteria:
   Hermeticity – <1x10^{-7} ccHe/sec @1 ATM differential.
   D.W.V. – per DTL-38999 pin-to-pin and pin-to-shell w/o breakdown
   I.R. – 5000 MegOhms min @ 500 VDC.
3. Glenair 237-153 receptacle conector is designed to mate with and QPL manufacturer's MIL-DTL-38999 Series III plug connector having the same shell size, insert arrangement, polarization and opposite contact gender.
4. Metric dimensions (mm) are indicated in parentheses.
5. Material/finish:
   Shell, jam nut – CRES/per part number development.
   Pin Contacts – Nickel iron alloy 52/gold plated.
   Socket Contacts – Copper alloy/52 gold plated.
   Socket Hoods – CRES/Passivate.
   Insulator, Pins – full glass/N.A.
   Insulator, Sockets – Rigid dielectric/N.A.
   Seals – Fluorosilicone/N.A.
   O-Ring – Cho-Seal 1298/ N.A.

Dimensions in Inches (millimeters) are subject to change without notice.

© 2013 Glenair, Inc.
U.S. CAGE Code 06324
Printed in U.S.A.

257-093
Jam Nut Mount Hermetic Bulkhead Feed-Thru
MIL-DTL-38999 Series III Type

Product Series	Connector Material and Finish	Insert Arrangement	Alternate Key Position
257	093	Z1	19 - 35	PP	N

Product Series

Connector Material and Finish
Z1 - CRES, Passivated
ZL - CRES, Nickel Plate
P - CRES, Nickel Plate

Insert Arrangement
Per MIL-DTL-38999 Series III

Alternate Key Position
A, B, C, D, E
(*N* = Normal)

Basic Number

Shell Size
Table I

Contact Termination
P - Pin on Jam Nut Side
S - Socket on Jam Nut Side
PP - Pin to Pin
SS - Socket to Socket

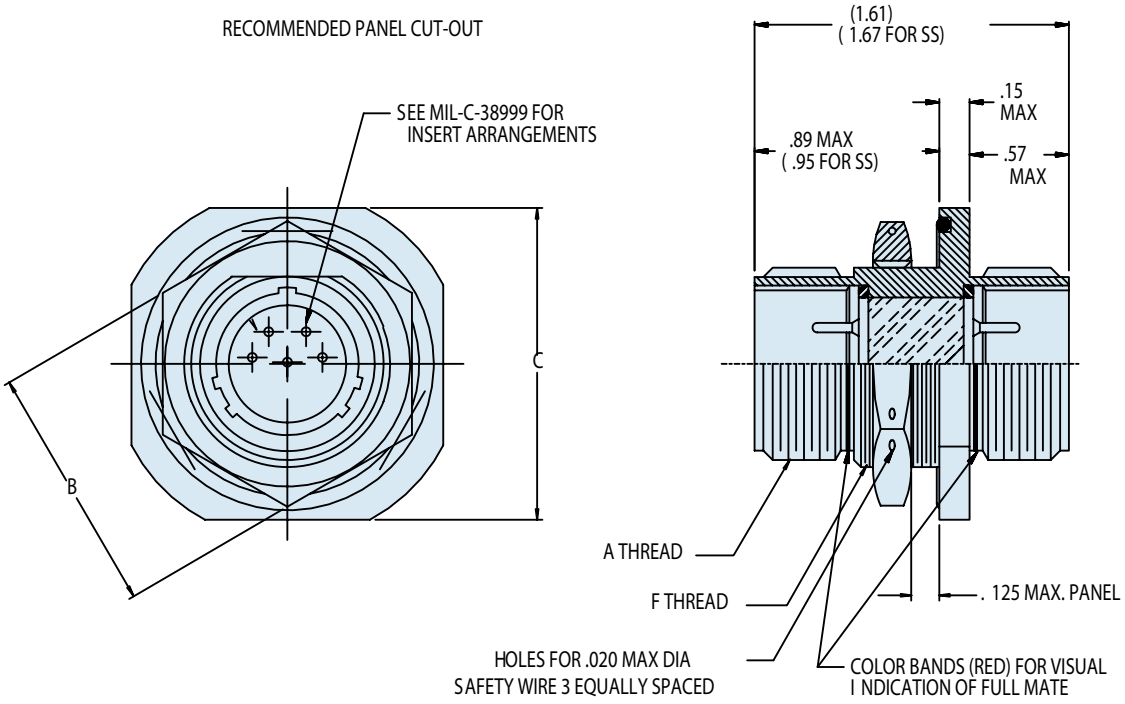

Dimensions in Inches (millimeters) are subject to change without notice.

© 2013 Glenair, Inc.
U.S. CAGE Code 06324
Printed in U.S.A.

HERMETIC LEAK RATE MOD CODES	
Designator	**Required Leak Rate**
–585A	1 x 10^{-10} cc Helium per second
–585B	1 x 10^{-9} cc Helium per second
–585C	1 x 10^{-8} cc Helium per second

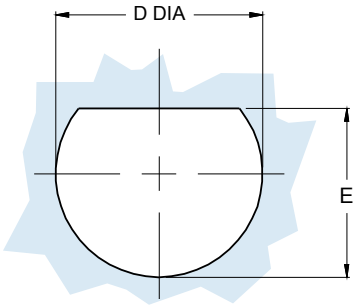

Recommended Panel Cut-Out

TABLE I: CONNECTOR DIMENSIONS						
SHELL SIZE	**A THREAD 0.1 P-0.3L-TS-2**	**B DIM**	**C DIM MAX**	**D DIA**	**E DIM**	**F THREAD CLASS 2A**
9	0.625	.875(22.2)	1.09(27.7)	.693 (17.60)	.657 (16.70)	11/16-24 UNEF
11	0.750	1.000(25.4)	1.28(32.5)	.825 (20.96)	.771 (19.59)	13/16-20 UNEF
13	0.875	1.250(31.8)	1.40(35.6)	1.010 (25.65)	.955 (24.26)	1-20 UNEF
15	1.000	1.375(34.9)	1.53(38.9)	1.135 (28.83)	1.085 (27.56)	1 1/8-18 UNEF
17	1.187	1.500(38.1)	1.66(42.2)	1.260 (32.01)	1.210 (30.73)	1 1/4-18 UNEF
19	1.250	1.625(41.3)	1.84(46.7)	1.385 (35.18)	1.335 (33.91)	1 3/8-18 UNEF
21	1.375	1.750(44.5)	1.97(50.5)	1.510 (38.35)	1.460 (37.08)	1 1/2-18 UNEF
23	1.500	1.875(47.6)	2.09(53.1)	1.635 (41.53)	1.585 (40.26)	1 5/8-18 UNEF
25	1.625	2.000(50.8)	2.21(56.1)	1.760 (44.70)	1.710 (43.43)	1 3/4-18 UNEF

APPLICATION NOTES

1. Assembly identified with manufacturer's name and PN, space permitting.
2. For pin/pin and socket/socket, symmetrical layouts only, consult factory for available insert arrangements.
3. Electrical safety limits must be established by user, peak voltage, switching surge, transient, etc. should be used to determine the safety of the application.
4. Material/Finish:
   Shell, lock ring, jam nut—stainless steel/passivate
   Contacts—alloy 52/gold plate
   Sockets—copper alloy/gold plate
   Hermetic Insulator—full glass/N.A.
   Socket Insulator—rigid dielectric/N.A.
   Seals—fluorosilicone/ N.A.
   Hermeticity –1x10-7 cc/second
5. Metric dimensions (mm) are indicated in parentheses.

Dimensions in Inches (millimeters) are subject to change without notice.

© 2013 Glenair, Inc.
U.S. CAGE Code 06324
Printed in U.S.A.

257-121
Special Jam Nut Mount Hermetic Receptacle
MIL-DTL-38999 Series III Type (D38999/23) with Accesory Threads

Connector Material and Finish	Insert Arrangement	Alternate Key Position
Z1 - CRES, Passivated *ZL* - CRES, Nickel Finish *Z1S* - CRES, Passivated (Space Rated)	*Per MIL-STD-1560 TableII*	*A, B, C, D, E* (*N* = Normal)

257-121	Z1	9	-	35	P	N
Basic Number		Shell Size *Table I*			Contact Termination *P* - Pin, Solder Cup *X* - Pin, Eyelet *S* - Socket, Solder Cup *Z* - Socket, Eyelet	

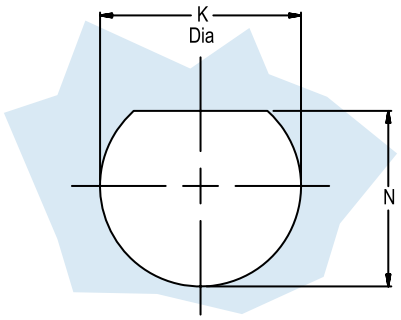

Recommended Panel Cut-Out

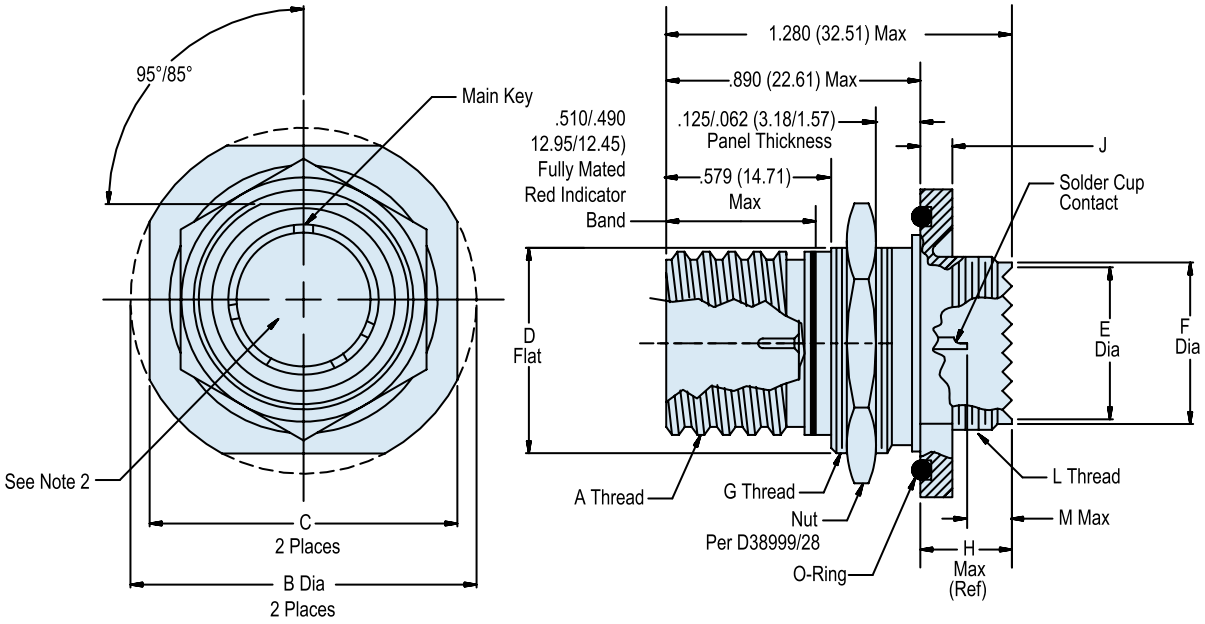

APPLICATION NOTES

1. Assembly identified with manufacturer's name and PN, space permitting.
2. Insert arrangement in accordance with MIL-STD-1560, See Table II.
3. Glenair 257-121 receptacle connector is designed to mate with any QPL manufacturer's MIL-DTL-38999 Series III plug connector having the same insert arrangement, polarization, and opposite contact gender.
4. Modified major diameter 31.95-31.80 (1.257-1.252)
5. Material/Finish:
   Shell, Nut - CRES/nickel per QQ-N-290 or CRES/passivated
   Contacts - nickel iron alloy 52/gold
   Insulator - fused vitreous glass/N.A.
   Hermetic Insulator—fused vitreous glass/N.A.
   O-Ring and Seals - fluorosilicone rubber/ N.A.
6. Metric dimensions (mm) are indicated in parentheses.

Dimensions in Inches (millimeters) are subject to change without notice.

© 2013 Glenair, Inc.

U.S. CAGE Code 06324

Printed in U.S.A.

257-121
Special Jam Nut Mount Hermetic Receptacle
MIL-DTL-38999 Series III Type (D38999/23)
with Accesory Threads

Glenair®

TABLE I: Shell Size, Shell Code, Thread and Dimensions (Continued Below)

Shell Size	Shell Code Ref	A THREAD 0.1 P-0.3L-TS	B Dia	C A/F	D Flat	E Dia Max	F Dia	G THREAD ISO Metric
9	A	0.6250	1.200 (30.48) 1.177 (29.90)	1.078 (27.38) 1.047 (26.59)	.654 (16.61) .645 (16.38)	.346 (8.79)	.416 (10.57) .410 (10.41)	M17 X 1-6G 0.100R
11	B	0.7500	1.385 (35.18) 1.362 (34.59)	1.267 (32.18) 1.236 (31.39)	.754 (19.15) .745 (18.92)	.475 (12.07)	.534 (13.56) .528 (13.41)	M20 X 1-6G 0.100R
13	C	0.8750	1.511 (38.78) 1.488 (37.80)	1.390 (35.31) 1.358 (34.49)	.941 (23.90) .932 (23.67)	.589 (14.96)	.653 (16.59) .647 (16.43)	M25 X 1-6G 0.100R
15	D	1.0000	1.637 (41.58) 1.614 (41.00)	1.515 (38.48) 1.484 (37.69)	1.065 (27.05) 1.056 (26.82)	.714 (18.14)	.810 (20.57) .804 (20.42)	M28 X 1-6G 0.100R
17	E	1.1870	1.763 (44.78) 1.740 (44.20)	1.641 (41.68) 1.610 (40.89)	1.190 (30.23) 1.181 (30.00)	.839 (21.31)	.928 (23.57) .922 (23.42)	M32 X 1-6G 0.100R (See Note 4)
19	F	1.2500	1.949 (49.50) 1.925 (48.90)	1.826 (46.38) 1.795 (45.59)	1.315 (33.40) 1.306 (33.17)	.945 (24.00)	1.046 (26.57) 1.040 (26.42)	M35 X 1-6G 0.100R
21	G	1.3750	2.075 (52.71) 2.051 (52.10)	1.952 (49.59) 1.921 (48.79)	1.440 (36.58) 1.431 (36.35)	1.070 (27.18)	1.164 (29.57) 1.158 (29.41)	M38 X 1-6G 0.100R
23	H	1.5000	2.200 (55.88) 2.177 (55.30)	2.078 (52.78) 2.047 (51.99)	1.565 (39.75) 1.556 (39.52)	1.194 (30.33)	1.282 (32.56) 1.276 (32.41)	M41 X 1-6G 0.100R
25	J	1.6250	2.323 (59.00) 2.299 (58.39)	2.204 (55.98) 2.173 (55.19)	1.690 (42.93) 1.681 (42.70)	1.320 (33.53)	1.400 (35.56) 1.394 (35.41)	M44 X 1-6G 0.100R

TABLE I: Shell Size, Shell Code, Thread and Dimensions (Continued from Above)

Shell Size	Shell Code Ref	H Max	J	K Dia	L THREAD ISO Metric	M Max	N
9	A	.390 (9.91)	.122 (3.10) .083 (2.11)	.710 (18.03) .700 (17.78)	M12 X 1-6G 0.100R	.200 (5.08)	.670 (17.02) .660 (16.76)
11	B	.390 (9.91)	.122 (3.10) .083 (2.11)	.835 (21.21) .825 (20.96)	M15 X 1-6G 0.100R	.200 (5.08)	.771 (19.58) .761 (19.33)
13	C	.390 (9.91)	.122 (3.10) .083 (2.11)	1.020 (25.91) 1.010 (25.65)	M18 X 1-6G 0.100R	.200 (5.08)	.955 (24.26) .945 (24.00)
15	D	.390 (9.91)	.122 (3.10) .083 (2.11)	1.145 (29.08) 1.135 (28.83)	M22 X 1-6G 0.100R	.200 (5.08)	1.085 (27.56) 1.075 (27.31)
17	E	.390 (9.91)	.122 (3.10) .083 (2.11)	1.270 (32.26) 1.260 (32.00)	M25 X 1-6G 0.100R	.200 (5.08)	1.210 (30.73) 1.200 (30.48)
19	F	.390 (9.91)	.153 (3.89) .114 (2.90)	1.395 (35.43) 1.385 (35.18)	M28 X 1-6G 0.100R	.200 (5.08)	1.335 (33.91) 1.325 (33.66)
21	G	.390 (9.91)	.153 (3.89) .114 (2.90)	1.520 (38.61) 1.510 (38.35)	M31 X 1-6G 0.100R	.200 (5.08)	1.460 (37.08) 1.450 (36.83)
23	H	.390 (9.91)	.153 (3.89) .114 (2.90)	1.645 (41.78) 1.635 (41.53)	M34 X 1-6G 0.100R	.200 (5.08)	1.585 (40.26) 1.575 (40.01)
25	J	.390 (9.91)	.153 (3.89) .114 (2.90)	1.770 (44.96) 1.760 (44.70)	M37 X 1-6G 0.100R	.200 (5.08)	1.710 (43.43) 1.700 (43.18)

TABLE II: Layouts and Pin Counts

Pattern	9-98	9-35	11-4	11-5	11-98	11-99	11-35	11-2	13-4	13-8	13-98	13-35	15-5	15-15	15-18	15-19	15-97	15-35	17-6	17-8	17-26	17-99	17-35	19-11	19-28	19-30	19-32
22D		6					13					22						37					55				
20	3		4	5	6	7				8	10			14	18	19	8				26	21			26	29	32
16								2	4				5	1			4			8		2		11	2	1	
12																			6								

Pattern	19-35	19-45	21-11	21-16	21-24	21-25	21-27	21-41	21-39	21-35	23-35	23-21	23-32	23-34	23-36	23-53	23-97	23-99	23-55	25-35	25-29	25-61	25-4	25-43	25-19	25-24
22D	66	67								79	100									128						
20					24	25	27	41	37				32	34	36	53			55			61	48	23		
16				16					2			21					16	11			29		8	20		
12			11																						19	12

Dimensions in Inches (millimeters) are subject to change without notice.

© 2013 Glenair, Inc.

U.S. CAGE Code 06324

Printed in U.S.A.

257-215
Jam Nut Mount Hermetic Receptacles
with Crimp Removable Socket Contacts
MIL-DTL-38999 Series III Type

Basic Number	Insert Arrangement *Per MIL-STD-1560*	Alternate Key Position *A, B, C, D, E* (*N* = Normal)
257-215	- 17 -	8 P A

Shell Size *Table I*

Contact Termination
P - Pin
S - Socket

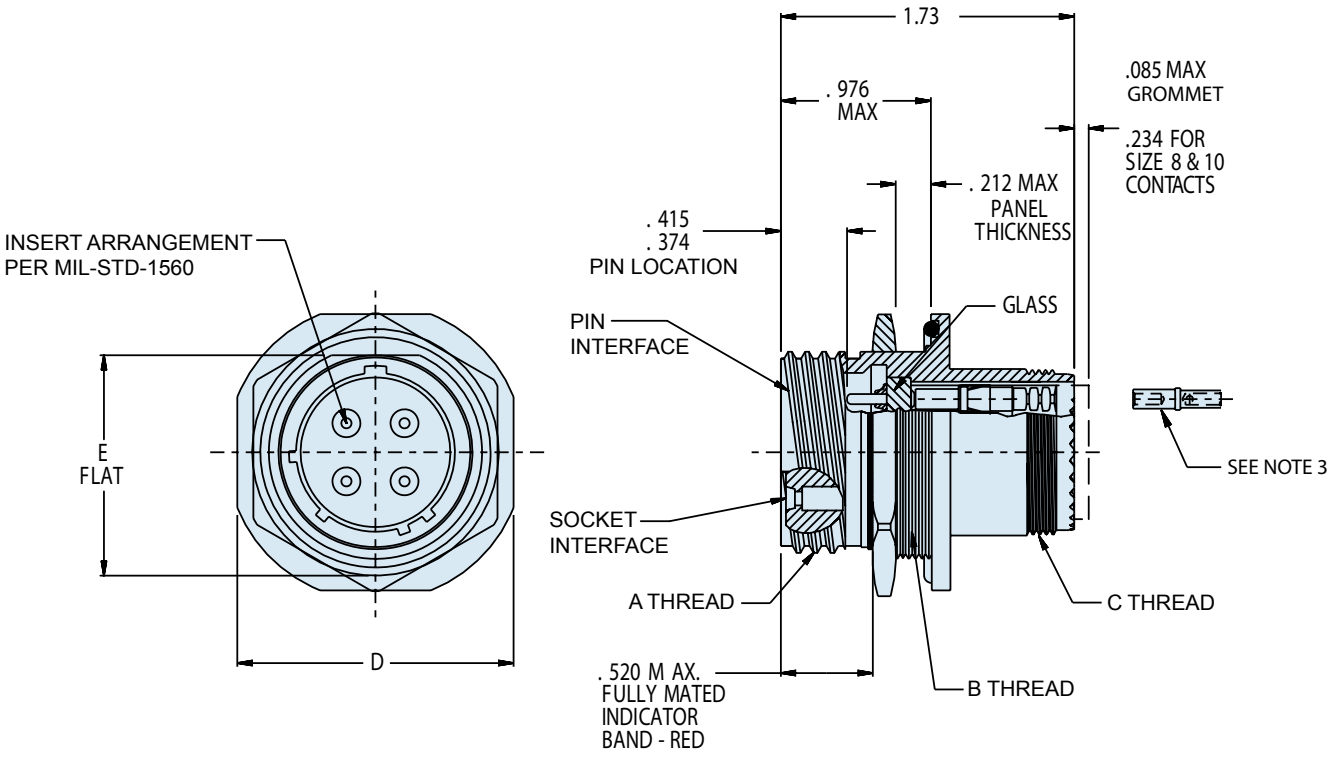

Dimensions in Inches (millimeters) are subject to change without notice.

© 2013 Glenair, Inc. U.S. CAGE Code 06324 Printed in U.S.A.

TABLE I: CONNECTOR DIMENSIONS							
SHELL SIZE	CODE	A THREAD 0.1 P-0.3L-TS-2A	B THREAD	C THREAD	D ± .016	E +.004 (0.1) -.006 (0.15)	F DIA ±.005 (0.1)
9	A	0.625	M17X1-6g 0.100R	M12X1-6g 0.100R	1.062	.657 (16.70)	.693 (17.60)
11	B	0.750	M20X1-6g 0.100R	M15X1-6g 0.100R	1.252	.771 (19.59)	.825 (20.96)
13	C	0.875	M25X1-6g 0.100R	M18X1-6g 0.100R	1.374	.955 (24.26)	1.010 (25.65)
15	D	1.000	M28X1-6g 0.100R	M22X1-6g 0.100R	1.500	1.085 (27.56)	1.135 (28.83)
17	E	1.187	M32X1-6g 0.100R	M25X1-6g 0.100R	1.626	1.210 (30.73)	1.260 (32.01)
19	F	1.250	M35X1-6g 0.100R	M28X1-6g 0.100R	1.811	1.335 (33.91)	1.385 (35.18)
21	G	1.375	M38X1-6g 0.100R	M31X1-6g 0.100R	1.937	1.460 (37.08)	1.510 (38.35)
23	H	1.500	M41X1-6g 0.100R	M34X1-6g 0.100R	2.063	1.585 (40.26)	1.635 (41.53)
25	J	1.625	M44X1-6g 0.100R	M37X1-6g 0.100R	2.190	1.710 (43.43)	1.760 (44.70)

HERMETIC LEAK RATE MOD CODES	
Designator	Required Leak Rate
–585A	1 x 10^{-10} cc Helium per second
–585B	1 x 10^{-9} cc Helium per second
–585C	1 x 10^{-8} cc Helium per second

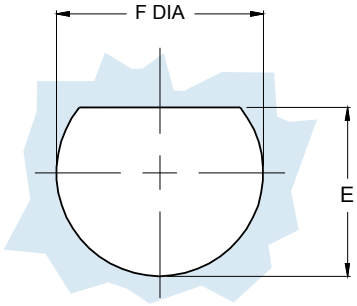

Recommended Panel Cut-Out

APPLICATION NOTES

1. Assembly identified with manufacturer's name and PN, space permitting.
2. Material/Finish:
   Shell, lock ring, jam nut—stainless steel/passivate
   Contacts—alloy 52/gold plate
   Sockets—copper alloy/gold plate
   Hermetic Insulator—full glass/N.A.
   Socket Insulator—rigid dielectric/N.A.
   Seals—fluorosilicone/ N.A.
   Hermeticity—1x10^{-7} cc/second
3. Crimp removable socket contacts to conform to AS39029/57-359 size 12, MIL-C-39029/57-358, size 16, MIL-C-39029/57-357 size 20 and MIL-C-39029/57-354 size 22D (supplied loose)
4. Metric dimensions (mm) are indicated in parentheses.

Dimensions in Inches (millimeters) are subject to change without notice.

© 2013 Glenair, Inc.

257-216
Jam Nut Mount Hermetic Receptacles
with Crimp Removable Socket Contacts
MIL-DTL-38999 Series III Type

Basic Number	Insert Arrangement *Per MIL-STD-1560*	Alternate Key Position *A, B, C, D, E* (*N* = Normal)
257-216	- 17 -	8 P A

Shell Size *Table I*

Contact Termination
P - Pin
S - Socket

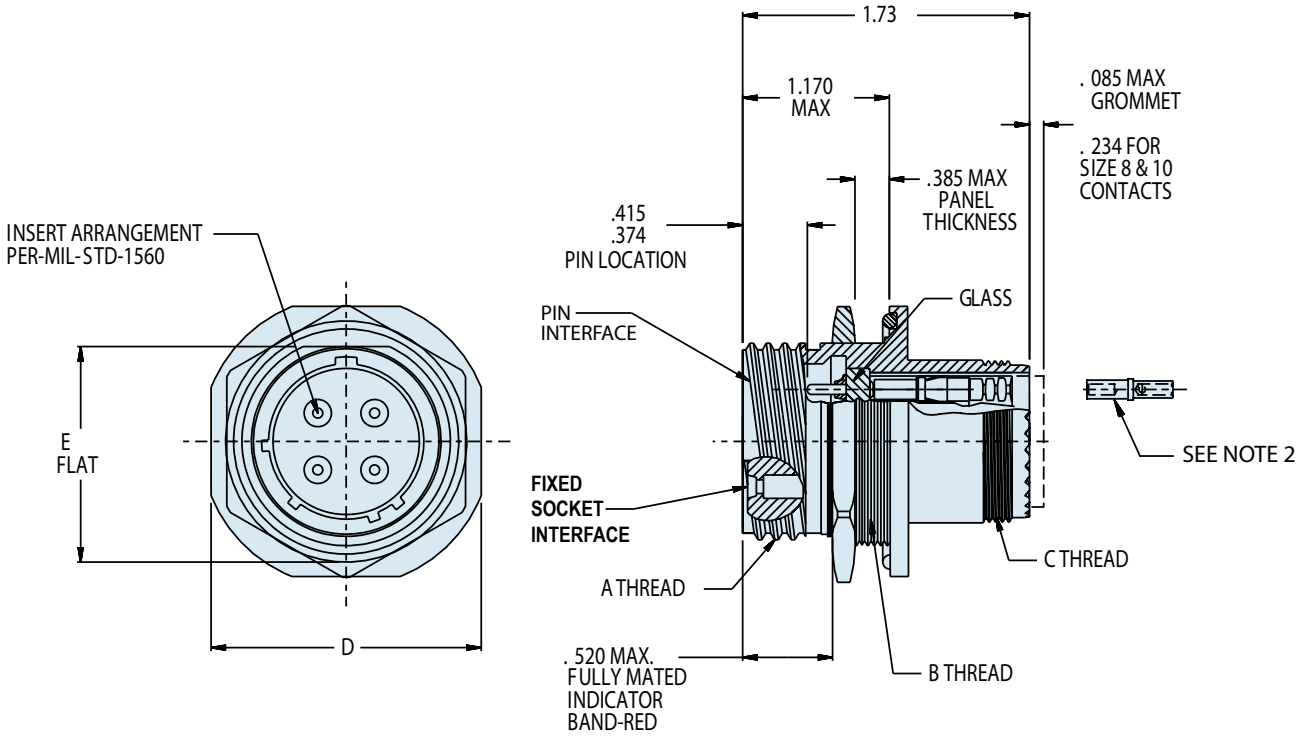

Dimensions in Inches (millimeters) are subject to change without notice.

© 2013 Glenair, Inc. U.S. CAGE Code 06324 Printed in U.S.A.

TABLE I: CONNECTOR DIMENSIONS							
SHELL SIZE	CODE	A THREAD 0.1 P-0.3L-TS-2A	B THREAD	C THREAD	D ± .016	E +.004 (0.1) -.006 (0.15)	F DIA ± .005 (0.1)
9	A	0.625	M17X1-6g 0.100R	M12X1-6g 0.100R	1.062	.657 (16.70)	.693 (17.60)
11	B	0.750	M20X1-6g 0.100R	M15X1-6g 0.100R	1.252	.771 (19.59)	.825 (20.96)
13	C	0.875	M25X1-6g 0.100R	M18X1-6g 0.100R	1.374	.955 (24.26)	1.010 (25.65)
15	D	1.000	M28X1-6g 0.100R	M22X1-6g 0.100R	1.500	1.085 (27.56)	1.135 (28.83)
17	E	1.187	M32X1-6g 0.100R	M25X1-6g 0.100R	1.626	1.210 (30.73)	1.260 (32.01)
19	F	1.250	M35X1-6g 0.100R	M28X1-6g 0.100R	1.811	1.335 (33.91)	1.385 (35.18)
21	G	1.375	M38X1-6g 0.100R	M31X1-6g 0.100R	1.937	1.460 (37.08)	1.510 (38.35)
23	H	1.500	M41X1-6g 0.100R	M34X1-6g 0.100R	2.063	1.585 (40.26)	1.635 (41.53)
25	J	1.625	M44X1-6g 0.100R	M37X1-6g 0.100R	2.190	1.710 (43.43)	1.760 (44.70)

HERMETIC LEAK RATE MOD CODES	
Designator	Required Leak Rate
–585A	1 x 10^{-10} cc Helium per second
–585B	1 x 10^{-9} cc Helium per second
–585C	1 x 10^{-8} cc Helium per second

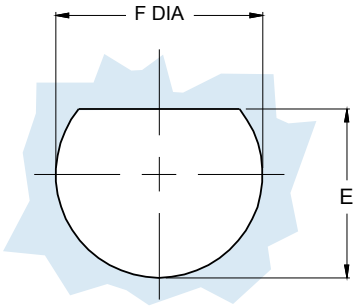

Recommended Panel Cut-Out

APPLICATION NOTES

1. Assembly identified with manufacturer's name and PN, space permitting.

Material/Finish:
Shell, lock ring, jam nut—CRES/passivated
Contacts—alloy 52/gold plate
Sockets—copper alloy/gold plate
Hermetic Insulator—fused vitreous glass/N.A.
Socket Insulator—high grade rigid dielectric/N.A.
Seals—fluorosilicone/ N.A.
Hermeticity—1x10^{-7} cc/second

2. Crimp removable socket contacts to conform to AS39029/57-359 size 12, MIL-C-39029/57-358, size 16, MIL-C-39029/57-357 size 20 and MIL-C-39029/57-354 size 22D (supplied loose)
3. Metric dimensions (mm) are indicated in parentheses.

Dimensions in Inches (millimeters) are subject to change without notice.

© 2013 Glenair, Inc.

257-288
Box Mount Hermetic Receptacle
with Crimp Removable Socket Contacts
MIL-DTL-38999 Series III Type

Basic Number	Shell Size		Contact Style		
257-288	Z1	17 -	26	P	N

Connector Material and Finish
Z1 - CRES, Passivated
ZL - CRES, Nickel Finish

Insert Arrangement
Per MIL-STD-1560

Contact Style
P - Pin Face
S - Socket Face

Alternate Key Position
A, B, C, D, E
(*N* = Normal)

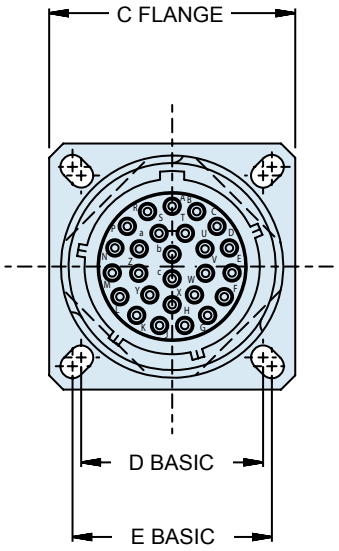

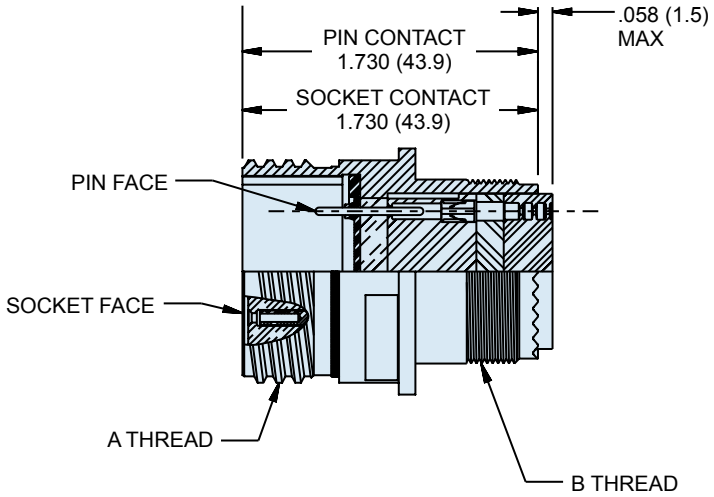

Dimensions in Inches (millimeters) are subject to change without notice.

© 2013 Glenair, Inc.
U.S. CAGE Code 06324
Printed in U.S.A.

TABLE I: CONNECTOR DIMENSIONS

Shell Size	Code	A Thread 0.1 P-0.3L-TS-2A	B Thread	C Flange	D B	E Typ	Ø H Min	Ø J Min	Ø K Holes	L Basic
9	A	0.625	M12X1-6g 0.100R	.949/.925	.594	.719	.656	.516	.133 .123	.719
11	B	0.750	M15X1-6g 0.100R	1.043/1.020	.719	.812	.796	.625		.812
13	C	0.875	M18X1-6g 0.100R	1.138/1.114	.812	.906	.922	.750		.906
15	D	1.000	M22X1-6g 0.100R	1.232/1.209	.906	.969	1.047	.906		.969
17	E	1.187	M25X1-6g 0.100R	1.323/1.299	.969	1.062	1.219	1.016		1.062
19	F	1.250	M28X1-6g 0.100R	1.449/1.425	1.062	1.156	1.297	1.141		1.156
21	G	1.375	M31X1-6g 0.100R	1.575/1.551	1.156	1.250	1.422	1.266		1.250
23	H	1.500	M34X1-6g 0.100R	1.701/1.677	1.250	1.375	1.547	1.375	.159 .149	1.375
25	J	1.625	M37X1-6g 0.100R	1.823/1.799	1.375	1.500	1.672	1.484	.155 .145	1.500

HERMETIC LEAK RATE MOD CODES	
Designator	**Required Leak Rate**
–585A	1 x 10^{-10} cc Helium per second
–585B	1 x 10^{-9} cc Helium per second
–585C	1 x 10^{-8} cc Helium per second

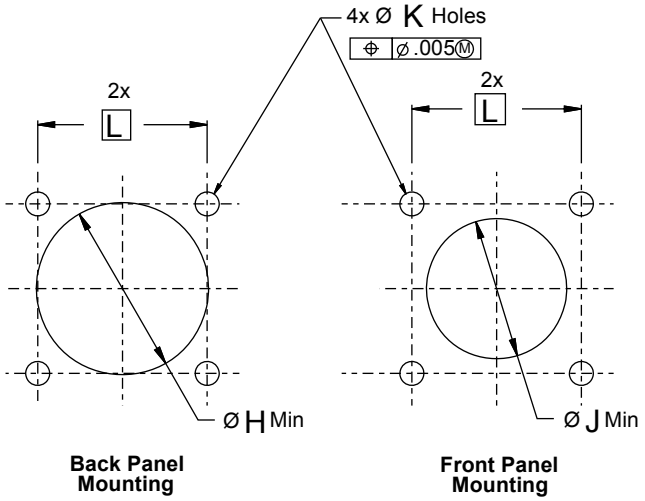

Recommended Mounting Holes

APPLICATION NOTES

1. Assembly identified with manufacturer's name and PN, space permitting.
2. Material/Finish:
   Shell, lock ring, jam nut—CRES/passivated
   Contacts—alloy 52/gold plate
   Sockets—copper alloy/gold plate
   Hermetic Insulator—fused vitreous glass/N.A.
   Socket Insulator—high grade rigid dielectric/N.A.
   Seals—fluorosilicone/ N.A.
3. Crimp removable socket contacts to conform to MIL-C-39029/57-358, size 16, MIL-C-39029/57-357 size 20 and MIL-C-39029/57-354 size 22D (supplied loose)
4. Metric dimensions (mm) are indicated in parentheses.

Dimensions in Inches (millimeters) are subject to change without notice.

© 2013 Glenair, Inc.
U.S. CAGE Code 06324
Printed in U.S.A.

257-332
Hermetic Jam Nut Receptacle
with Crimp Removable Socket Contacts
MIL-DTL-38999 Series III Type

Shell Size
A - 9
B - 11
C - 13
D - 15
E - 17
F - 19
G - 21
H - 23
J - 25

Contact Style
P - Pin Contacts
S - Socket Contacts

Basic Number

257-332	P	17 - 8	P	A

Finish (See Note 2)

Insert Arrangement Per MIL-STD-1560; See Pages B2 - B4

Alternate Key Position *A, B, C, D or E (N for Normal)*

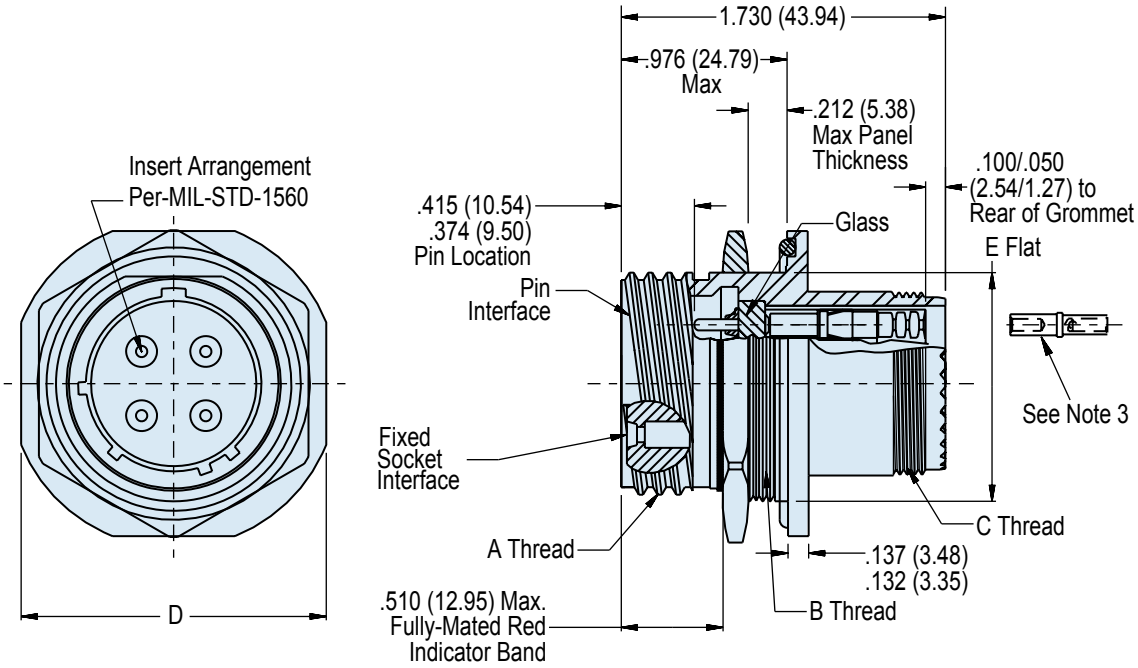

Dimensions in Inches (millimeters) are subject to change without notice.

© 2013 Glenair, Inc.
U.S. CAGE Code 06324
Printed in U.S.A.

TABLE I (CONTINUED): CUT-OUT DIMENSIONS		
SHELL SIZE	K DIA ± .005 (0.1)	N ± .005 (0.1)
A	.693 (17.60)	.657 (16.70)
B	.825 (20.96)	.771 (19.59)
C	1.010 (25.65)	.955 (24.26)
D	1.135 (28.83)	1.085 (27.56)
E	1.260 (32.01)	1.210 (30.73)
F	1.385 (35.18)	1.335 (33.91)
G	1.510 (38.35)	1.460 (37.08)
H	1.635 (41.53)	1.585 (40.26)
J	1.760 (44.70)	1.710 (43.43)

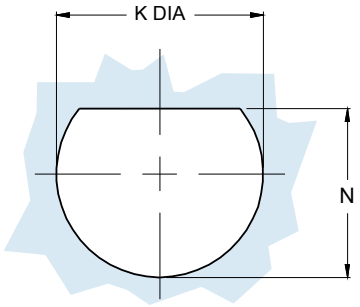

Recommended Panel Cut-Out

HERMETIC LEAK RATE MOD CODES	
Designator	Required Leak Rate
–585A	1 x 10^{-10} cc Helium per second
–585B	1 x 10^{-9} cc Helium per second
–585C	1 x 10^{-8} cc Helium per second

TABLE I: CONNECTOR DIMENSIONS						
SHELL SIZE	SHELL SIZE CODE	A THREAD	B THREAD	C THREAD	D +/- .016 (MM)	E +/-.004-.006 (MM)
9	A	.6250-.1P.3L-TS-2A	M17x1-6g 0.100R	M12x1-6g 0.100R	1.062 (2.70)	0.651 (1.65)
11	B	.7500-.1P.3L-TS-2A	M20x1-6g 0.100R	M15x1-6g 0.100R	1.252 (3.18)	0.751 (1.91)
13	C	.8750-.1P.3L-TS-2A	M25x1-6g 0.100R	M18x1-6g 0.100R	1.374 (3.49)	0.938 (2.38)
15	D	1.000-.1P.3L-TS-2A	M28x1-6g 0.100R	M22x1-6g 0.100R	1.500 (3.81)	1.062 (2.70)
17	E	1.1875-.1P.3L-TS-2A	M32x1-6g 0.100R	M25x1-6g 0.100R	1.626 (4.13)	1.187 (3.01)
19	F	1.250-.1P.3L-TS-2A	M35x1-6g 0.100R	M28x1-6g 0.100R	1.811 (4.60)	1.312 (3.33)
21	G	1.375-.1P.3L-TS-2A	M38x1-6g 0.100R	M31x1-6g 0.100R	1.937 (4.92)	1.437 (3.65)
23	H	1.500-.1P.3L-TS-2A	M41x1-6g 0.100R	M34x1-6g 0.100R	2.063 (5.24)	1.562 (3.97)
25	J	1.625-.1P.3L-TS-2A	M44x1-6g 0.100R	M37x1-6g 0.100R	2.189 (5.56)	1.687 (4.28)

APPLICATION NOTES

1. Assembly to be identified with Glenair's name and part number and date code, space permitting.
2. Material/finishes:
   Shell Receptacle, Jam Nut – CRES Passivated (Z1), CRES/NI (P)
   Pin Contact – alloy 52 / gold plated
   Socket Contact – copper alloy / gold plated
   Insulator – fused vitreous glass / N.A.
   Insulators – high grade rigid dielectric
   Seals—fluorosilicone / N.A.
3. Crimp removable socket contacts to conform to AS39029/57-359 – size 12:
   AS39029/57-358 – size 16;
   AS39029/57-357 – size 20;
   and AS39029/57-354 – size 22D (supplied loose).

Dimensions in Inches (millimeters) are subject to change without notice.

© 2013 Glenair, Inc.
U.S. CAGE Code 06324
Printed in U.S.A.

257-333
Hermetic Jam Nut Receptacle
with Crimp Removable Socket Contacts
MIL-DTL-38999 Series III Type

Shell Size
A - 9
B - 11
C - 13
D - 15
E - 17
F - 19
G - 21
H - 23
J - 25

Contact Style
P - Pin Contacts
S - Socket Contacts

Basic Number		Shell Size		Contact Style	Alternate Key Position
257-333	Z1	17	- 8	P	A

Finish (See Note 2)

Insert Arrangement Per MIL-STD-1560; See Pages B2 - B4

Alternate Key Position *A, B, C, D or E (N for Normal)*

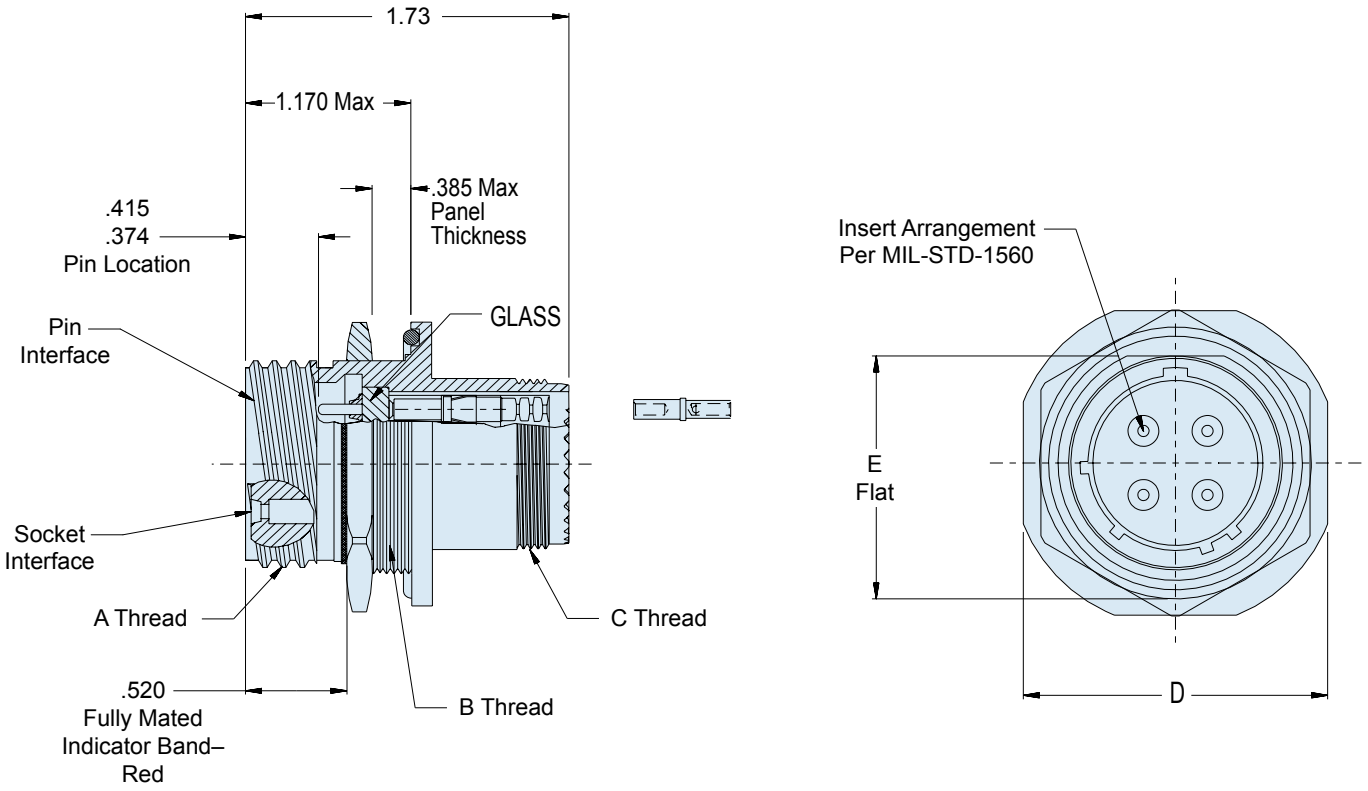

Dimensions in Inches (millimeters) are subject to change without notice.

© 2013 Glenair, Inc.
U.S. CAGE Code 06324
Printed in U.S.A.

TABLE I (CONTINUED): CUT-OUT DIMENSIONS		
SHELL SIZE	K DIA ± .005 (0.1)	N ± .005 (0.1)
A	.693 (17.60)	.657 (16.70)
B	.825 (20.96)	.771 (19.59)
C	1.010 (25.65)	.955 (24.26)
D	1.135 (28.83)	1.085 (27.56)
E	1.260 (32.01)	1.210 (30.73)
F	1.385 (35.18)	1.335 (33.91)
G	1.510 (38.35)	1.460 (37.08)
H	1.635 (41.53)	1.585 (40.26)
J	1.760 (44.70)	1.710 (43.43)

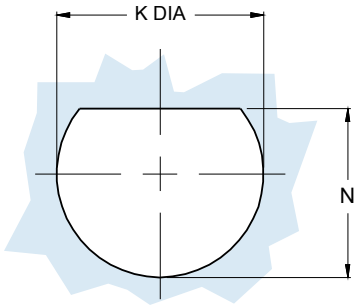

Recommended Panel Cut-Out

HERMETIC LEAK RATE MOD CODES	
Designator	Required Leak Rate
–585A	1 x 10^{-10} cc Helium per second
–585B	1 x 10^{-9} cc Helium per second
–585C	1 x 10^{-8} cc Helium per second

TABLE I: CONNECTOR DIMENSIONS						
SHELL SIZE	SHELL SIZE CODE	A THREAD	B THREAD	C THREAD	D +/- .016 (MM)	E +/-.004-.006 (MM)
9	A	.6250-.1P.3L-TS-2A	M17x1-6g 0.100R	M12x1-6g 0.100R	1.062 (2.70)	0.651 (1.65)
11	B	.7500-.1P.3L-TS-2A	M20x1-6g 0.100R	M15x1-6g 0.100R	1.252 (3.18)	0.751 (1.91)
13	C	.8750-.1P.3L-TS-2A	M25x1-6g 0.100R	M18x1-6g 0.100R	1.374 (3.49)	0.938 (2.38)
15	D	1.000-.1P.3L-TS-2A	M28x1-6g 0.100R	M22x1-6g 0.100R	1.500 (3.81)	1.062 (2.70)
17	E	1.1875-.1P.3L-TS-2A	M32x1-6g 0.100R	M25x1-6g 0.100R	1.626 (4.13)	1.187 (3.01)
19	F	1.250-.1P.3L-TS-2A	M35x1-6g 0.100R	M28x1-6g 0.100R	1.811 (4.60)	1.312 (3.33)
21	G	1.375-.1P.3L-TS-2A	M38x1-6g 0.100R	M31x1-6g 0.100R	1.937 (4.92)	1.437 (3.65)
23	H	1.500-.1P.3L-TS-2A	M41x1-6g 0.100R	M34x1-6g 0.100R	2.063 (5.24)	1.562 (3.97)
25	J	1.625-.1P.3L-TS-2A	M44x1-6g 0.100R	M37x1-6g 0.100R	2.189 (5.56)	1.687 (4.28)

APPLICATION NOTES

1. Assembly to be identified with Glenair's name and part number and date code, space permitting.
2. Material/finishes:
   Shell Receptacle, Jam Nut – CRES Passivated (Z1), CRES/NI (P)
   Pin Contact – alloy 52 / gold plated
   Socket Contact – copper alloy / gold plated
   Insulator – fused vitreous glass / N.A.
   Insulators – high grade rigid dielectric
   Seals—fluorosilicone / N.A.
   Hermeticity— 1x10^{-7} cc/second
3. Crimp removable socket contacts to conform to AS39029/57-359 – size 12:
   MIL-C-39029/57-358 – size 16;
   MIL-C-39029/57-357 – size 20;
   and MIL-C-39029/57-354 – size 22D (supplied loose)
   Supply 1 extra contact for each size used.

Dimensions in Inches (millimeters) are subject to change without notice.

© 2013 Glenair, Inc.

947-082
Jam Nut Mount Hermetic Bulkhead Feed-Thru
.500/.625 inch Panel
MIL-DTL-38999 Series III Type

Product Series	Finish	Insert Arrangement	Contact Termination
	Z1 = CRES Passivate	*Per MIL-DTL-38999 Series III*	*P* - Pin on Jam Nut Side *S* - Socket on Jam Nut Side

947 - 082 Z1 25 - 35 B P P

Basic Number	Shell Size	Alternate Key Position	Contact Termination
	Table I	*A, B, C, D, E* (Omit for Normal)	*P* - Pin on Non-Jam Nut Side *S* - Socket on Non-Jam Nut Side

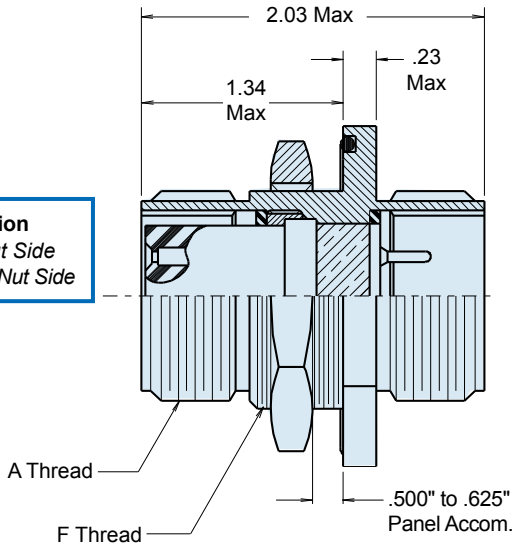

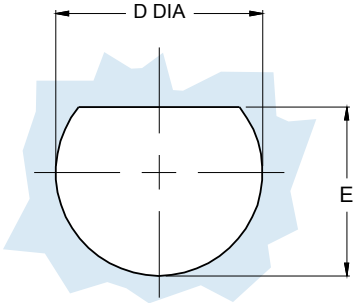

Recommended Panel Cut-Out

HERMETIC LEAK RATE MOD CODES	
Designator	**Required Leak Rate**
–585A	1 x 10^{-10} cc Helium per second
–585B	1 x 10^{-9} cc Helium per second
–585C	1 x 10^{-8} cc Helium per second

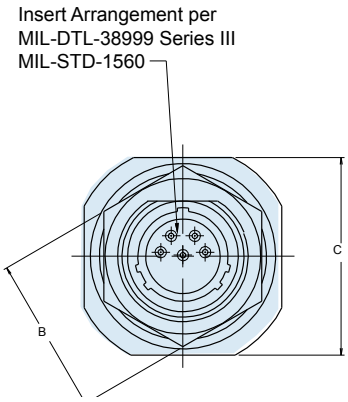

TABLE I: CONNECTOR DIMENSIONS

SHELL SIZE	A THREAD 0.1 P-0.3L-TS-2	B DIM	C DIM MAX	D DIA	E DIM	F THREAD 1-6g 0.100R
09	.6250	.875(22.2)	1.090(27.7)	.693 (17.60)	.657 (16.70)	M17
11	.7500	1.000(25.4)	1.280(32.5)	.825 (20.96)	.771 (19.59)	M20
13	.8750	1.250(31.8)	1.400(35.6)	1.010 (25.80)	.955 (24.26)	M25
15	1.0000	1.375(34.9)	1.530(38.9)	1.135 (25.65)	1.085 (27.56)	M28
17	1.1875	1.500(38.1)	1.660(42.2)	1.260 (28.83)	1.210 (30.73)	M32
19	1.2500	1.625(41.3)	1.840(46.7)	1.385 (32.01)	1.335 (33.91)	M35
21	1.3750	1.750(44.5)	1.970(50.5)	1.510 (35.18)	1.460 (37.08)	M38
23	1.5000	1.875(47.6)	2.090(53.1)	1.635 (41.53)	1.585 (40.26)	M41
25	1.6250	2.000(50.8)	2.210(56.1)	1.760 (44.70)	1.710 (43.43)	M44

APPLICATION NOTES

1. Power to a given contact on one end will result in power to contact directly opposite, regardless of identification letter.
2. Hermeticity = less than 1 x 10^{-7} cc/sec at one atmosphere. Not for use in liquid atmosphere.
3. Material/finish:
   Shell, nut – CRES/passivated, carbon steel/fused tin or CRES/nickel per QQ-N-290.
   Contacts – Gold Plated. Pin: alloy 52; Skt.: copper alloy
   Insulator – fused vitreous glass/N.A.
   Seals – fluorosilicone rubber/N.A.
4. Metric dimensions (mm) are indicated in parentheses.

Dimensions in Inches (millimeters) are subject to change without notice.

© 2013 Glenair, Inc.
U.S. CAGE Code 06324
Printed in U.S.A.

947-115
Jam Nut Mount Hermetic Bulkhead Feed-Thru
.250/.500 inch Panel
MIL-DTL-38999 Series III Type

Glenair®

Product Series — **947**

Shell Size *Table I* — **115**

Alternate Key Position *A, B, C, D, E* (*Omit for Normal*) — **21**

Dash Number — **01**

947 - 115 - 21 - 35 B P 01

Basic Number

Insert Arrangement *Per MIL-DTL-38999 Series III*

Contact Termination
P - Pin on Jam Nut Side
S - Socket on Jam Nut Side
PP - Pin to Pin
SS - Socket to Socket

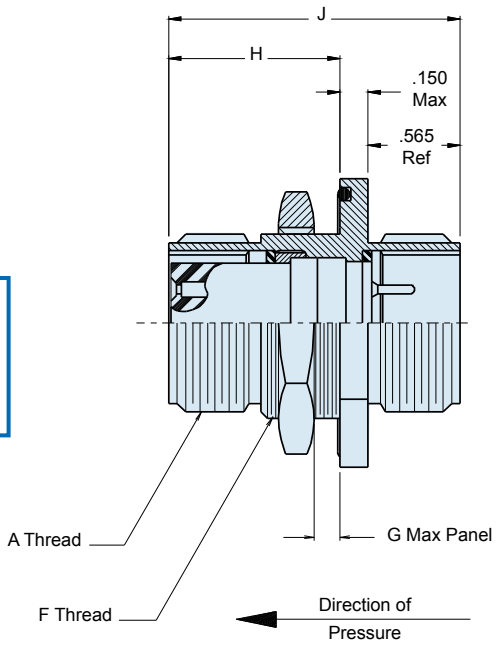

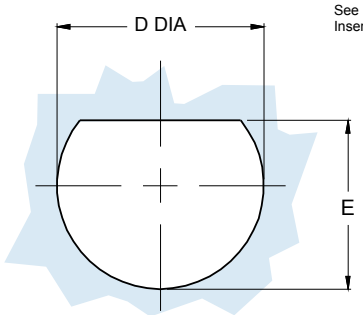

Recommended Panel
Cut-Out

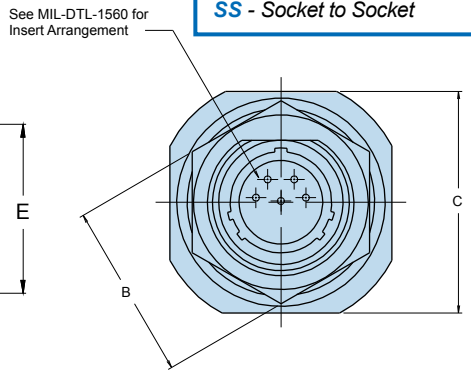

TABLE I: CONNECTOR DIMENSIONS

SHELL SIZE	A THREAD 0.1 P-0.3L-TS-2	B DIM	C DIM MAX	D DIA	E DIM	F THREAD x1-6g-0.100R
9	0.625	.875(22.2)	1.09(27.7)	.693 (17.60)	.657 (16.70)	M17
11	0.750	1.000(25.4)	1.28(32.5)	.825 (20.96)	.771 (19.59)	M20
13	0.875	1.250(31.8)	1.40(35.6)	1.010 (25.80)	.955 (24.26)	M25
15	1.000	1.375(34.9)	1.53(38.9)	1.135 (25.65)	1.085 (27.56)	M28
17	1.187	1.500(38.1)	1.66(42.2)	1.260 (28.83)	1.210 (30.73)	M32
19	1.250	1.625(41.3)	1.84(46.7)	1.385 (32.01)	1.335 (33.91)	M35
21	1.375	1.750(44.5)	1.97(50.5)	1.510 (35.18)	1.460 (37.08)	M38
23	1.500	1.875(47.6)	2.09(53.1)	1.635 (41.53)	1.585 (40.26)	M41
25	1.625	2.000(50.8)	2.21(56.1)	1.760 (44.70)	1.710 (43.43)	M44

HERMETIC LEAK RATE MOD CODES

Designator	Required Leak Rate
–585A	1 x 10^{-10} cc Helium per second
–585B	1 x 10^{-9} cc Helium per second
–585C	1 x 10^{-8} cc Helium per second

TABLE III: PANEL THICKNESS

DASH NO	G MAX	H MAX	J MAX
01	.250(6.4)	1.08(27.4)	1.79(45.5)
02	.500(12.7)	1.33(33.8)	2.04(51.8)

APPLICATION NOTES

1. Assembly identified with manufacturer's name and PN, space permitting.
2. For pin/pin and skt/skt, symmetrical layouts only, consult factory for available insert arrangements.
3. Power to a given contact on one end will result in power to contact directly opposite, regardless of identification letter.
4. Hermeticity = less than 1 x 10^{-7} cc/sec at one atmosphere. Not for use in liquid atmosphere.
5. Electrical safety limits must be established by user, peak voltage, switching surge, transient, etc. should be used to determine the safety of the application.
6. Material/finish:
   Shell, lock ring, jam nut—stainless steel/passivate
   Contacts—copper alloy/gold plate and alloy 52/gold plate
   Insulators—high-grade rigid dielectric/N.A. and full glass.
   Seals—fluorosilicone/ N.A.
7. Metric dimensions (mm) are indicated in parentheses.

Dimensions in Inches (millimeters) are subject to change without notice.

© 2013 Glenair, Inc. U.S. CAGE Code 06324 Printed in U.S.A.

B

947-282
Flange Mount Hermetic Bulkhead Feed-Thru
MIL-DTL-38999/21 Series III Type

Connector Material and Finish	Insert Arrangement	Alternate Key Position
Z1 - CRES, Passivated *ZL - CRES, Nickel Plated*	*Per MIL-STD-1560*	*A, B, C, D, E* (*N* = Normal)

947-282	Z1	17	-	35	S	N
Basic Number		Shell Size *Table I*			Contact Termination *P - Pin on Panel Side* *S - Socket on Panel Side*	

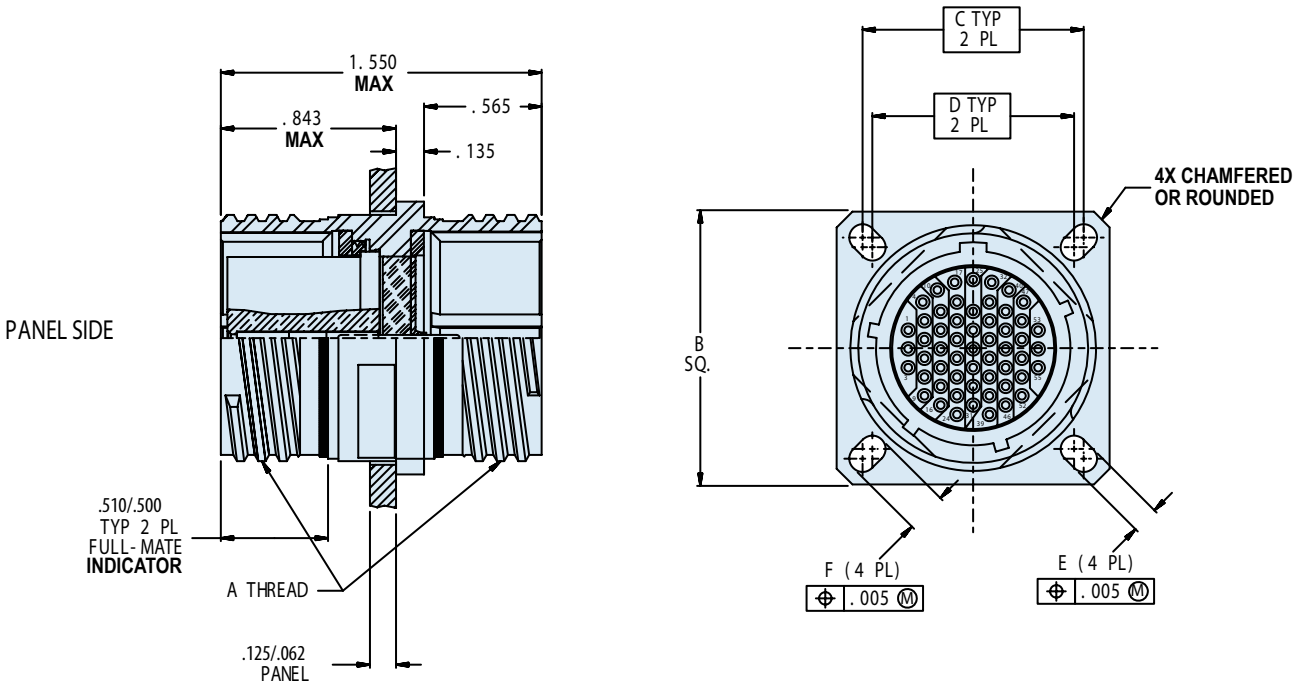

Dimensions in Inches (millimeters) are subject to change without notice.

© 2013 Glenair, Inc.
U.S. CAGE Code 06324
Printed in U.S.A.

947-282
Flange Mount Hermetic Bulkhead Feed-Thru
MIL-DTL-38999/21 Series III Type

Glenair®

TABLE I: CONNECTOR DIMENSIONS									
SHELL SIZE	A THREAD 0.1 P-0.3L-TS-2	B SQ.	C BASIC	D BASIC	E	F	Ø H MIN.	Ø G HOLES	K
9	0.625	.949 .925	.719	.594	.136 .120	.224 .208	.656	.133 .123	.724 .714
11	0.750	1.043 1.019	.812	.719		.202 .186	.781		.817 .807
13	0.875	1.138 1.114	.906	.812		.202 .186	.921		.911 .901
15	1.000	1.232 1.208	.969	.906		.181 .165	1.047		.973 .963
17	1.187	1.323 1.299	1.062	.969		.202 .186	1.218		1.067 1.057
19	1.250	1.449 1.425	1.156	1.062		.202 .186	1.296		1.161 1.151
21	1.375	1.575 1.551	1.250	1.156		.202 .186	1.421		1.255 1.245
23	1.500	1.701 1.677	1.375	1.250	.162 .146	.250 .234	1.546	.159 .149	1.380 1.370
25	1.625	1.823 1.799	1.500	1.375		.250 .234	1.672		1.505 1.495

HERMETIC LEAK RATE MOD CODES	
Designator	**Required Leak Rate**
–585A	1 x 10^{-10} cc Helium per second
–585B	1 x 10^{-9} cc Helium per second
–585C	1 x 10^{-8} cc Helium per second

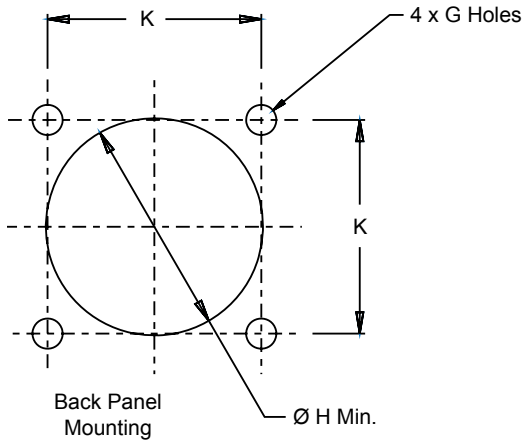

APPLICATION NOTES

1. Assembly identified with manufacturer's name and PN, space permitting.
2. Material/Finish:
   Shell, lock ring, jam nut—CRES/passivate or CRES/nickel plate
   Pin Contacts—nickel iron alloy/gold plate
   Socket Contacts—copper alloy/gold plate
   Insulator, Hermetic—vitreous glass/N.A.
   Insulator, Socket—rigid dielectric/N.A.
   Socket Insulator—high grade rigid dielectric/N.A.
   Seals—fluorosilicone blend/ N.A.
3. Electrical safety limits must be established by user, peak voltage, switching surge, transient, etc. Should be used to determine the safety application.
4. Hermeticity <1 x 10^{-7} cc He/sec at 1 ATM differential
5. Glenair 947-282 will mate with any QPL manufacturers D38999 series III plugs of same shell size, broach position, and opposite contact gender.
6. Metric dimensions (mm) are indicated in parentheses.

Dimensions in Inches (millimeters) are subject to change without notice.

© 2013 Glenair, Inc.
U.S. CAGE Code 06324
Printed in U.S.A.

D38999/41
Box Mount Hermetic Receptacle
MIL-DTL-38999 Series IV

How To Order: *MS*

Basic Specification	Connector Material / Finish	Insert Arrangement	Alternate Key Position
D38999	*N - CRES, Nickel* *Y - CRES, Passivated*	Per MIL-STD-1560; See Pages B2 - B4	*A, B, C, D, K, L, M, R, U* (*N* = Normal)

D38999	/41	Y	B	35	P	N

Shell Style
/41 - Box Mount

Shell Size

B - 11	*F* - 19
C - 13	*G* - 21
D - 15	*H* - 23
E - 17	*J* - 25

Contact Termination

P - Pin, Solder Cup	*S - Socket, Solder Cup*
X - Pin, Eyelet	*Z - Socket, Eyelet*
C - Pin, PCB Flex Feedthrough	*D - Socket, PCB Flex Feedthrough*

TABLE II: CONTACT SIZE

PRINTED CIRCUIT TAIL CONFIGURATIONS
CONTACT STYLE C AND D

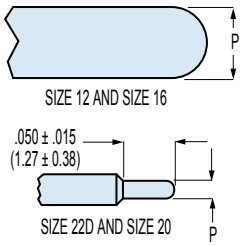

Contact Size	ø P
22D	.011 (0.28) .015 (0.38)
20	.024 (0.61) .028 (0.71)
16	.0635 (1.61) .0615 (1.56)
12	.095 (2.41) .093 (2.36)

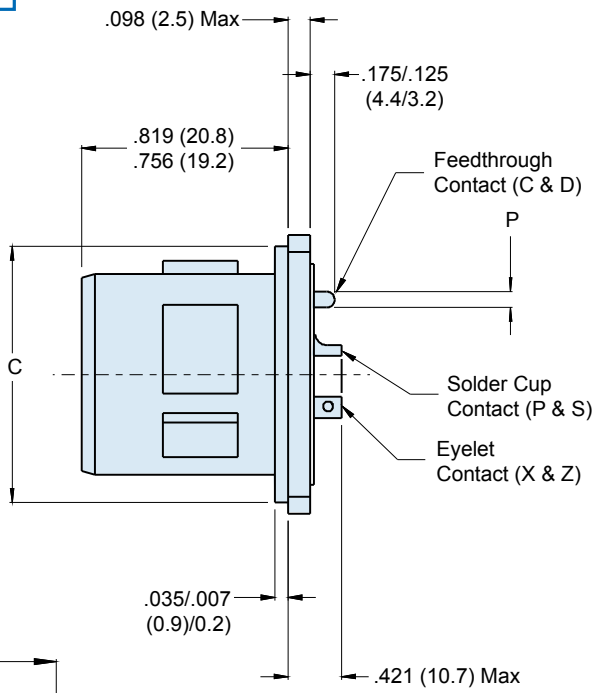

WIRE ACCOMODATION

Contact Size	Wire Guage
22D	#22 - #28
20	#20 - #24
16	#16 - #20
12	#12 - #14

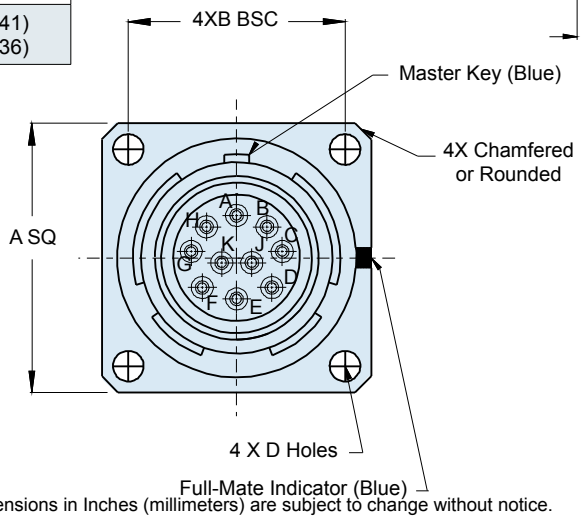

Dimensions in Inches (millimeters) are subject to change without notice.

© 2013 Glenair, Inc.

234-100-H2
Box Mount Hermetic Receptacle
MIL-DTL-38999 Series IV Type

How To Order: *Commercial*

Connector Series
234 - Series IV Type

Shell Style
H2 - Hermetic Box Mount

Shell Size
11,13,15,17,19,21,23,25

Contact Termination
P - Pin, Solder Cup *S - Socket, Solder Cup*
X - Pin, Eyelet *Z - Socket, Eyelet*
C - Pin, PCB *D - Socket, PCB*

234	-	100	-	H2	Z1	11	-	35	P	N

Connector Type
100 - Hermetic Receptacle

Connector Material / Finish
ZL - CRES, Nickel
Z1 - CRES, Passivated

Insert Arrangement
Per MIL-STD-1560;
See Pages B-2 - B-4

Alternate Key Position
A, B, C, D, K, L, M, R, U
(*N* = Normal)

HERMETIC LEAK RATE MOD CODES	
Designator	**Required Leak Rate**
–585A	1 x 10^{-10} cc Helium per second
–585B	1 x 10^{-9} cc Helium per second
–585C	1 x 10^{-8} cc Helium per second

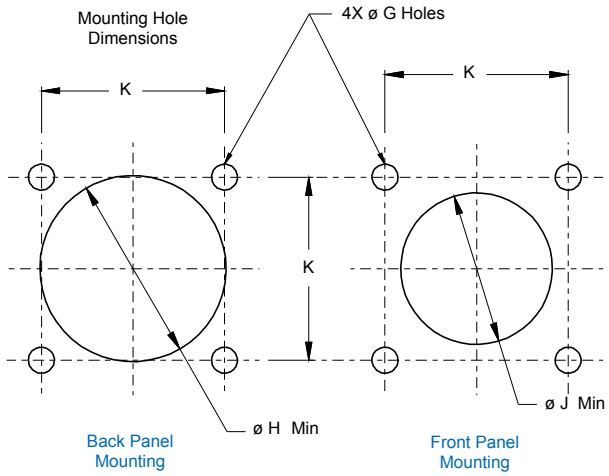

TABLE I: CONNECTOR DIMENSIONS									
SHELL SIZE CODE	**SHELL SIZE**	**A SQ**	**B BSC**	**C DIA**	**D DIA**	**øG HOLES ±.005(0.1)**	**ø H MIN**	**ø J MIN**	**K ±.005(0.1)**
B	11	1.051(26.7) 1.008(25.6)	.812(20.6)	.793(20.1) .778(19.8)	.138(3.5) .122(3.1)	.128(3.3)	.781(19.8)	.625(15.9)	.812(20.6)
C	13	1.145(29.1) 1.102(28.0)	.906(23.0)	.919(23.3) .904(23.0)	.138(3.5) .122(3.1)	.128(3.3)	.921(23.4)	.750(19.1)	.906(23.0)
D	15	1.240(31.5) 1.197(30.4)	.969(24.6)	1.044(26.5) 1.029(26.1)	.138(3.5) .122(3.1)	.128(3.3)	1.047(26.6)	.906(23.0)	.968(24.6)
E	17	1.334(33.9) 1.291(32.8)	1.062(27.0)	1.170(29.7) 1.155(29.3)	.138(3.5) .122(3.1)	.128(3.3)	1.218(30.9)	1.016(25.8)	1.062(27.0)
F	19	1.460(37.1) 1.417(36.0)	1.156(29.4)	1.294(32.9) 1.279(32.5)	.138(3.5) .122(3.1)	.128(3.3)	1.296(32.9)	1.142(29.0)	1.156(29.4)
G	21	1.583(40.2) 1.539(39.1)	1.250(31.8)	1.419(36.0) 1.404(35.7)	.138(3.5) .122(3.1)	.128(3.3)	1.421(36.1)	1.266(32.2)	1.250(31.8)
H	23	1.709(43.4) 1.665(42.3)	1.375(34.9)	1.544(39.2) 1.529(38.8)	.157(4.0) .142(3.6)	.154(3.9)	1.546(39.3)	1.375(34.9)	1.375(34.9)
J	25	1.835(46.6) 1.791(45.5)	1.500(38.1)	1.670(42.4) 1.654(42.0)	.157(4.0) .142(3.6)	.154(3.9)	1.672(42.5)	1.484(37.7)	1.500(38.1)

Dimensions in Inches (millimeters) are subject to change without notice.

© 2013 Glenair, Inc.
U.S. CAGE Code 06324
Printed in U.S.A.

D38999/43
Jam Nut Mount Hermetic Receptacle
MIL-DTL-38999 Series IV

How To Order: *MS*

Basic Specification	Connector Material / Finish		Insert Arrangement	Alternate Key Position	
D38999	*N - CRES, Nickel* *Y - CRES, Passivated*		Per MIL-STD-1560; See Pages B2 - B4	*A, B, C, D, K, L, M, R, U* (*N* = Normal)	
D38999	**/43**	**Y**	**B**	**35**	**P**	**N**

Shell Style
/43 - Jam Nut Mount

Shell Size

B - 11	*F - 19*
C - 13	*G - 21*
D - 15	*H - 23*
E - 17	*J - 25*

Contact Termination

P - Pin, Solder Cup	*S - Socket, Solder Cup*
X - Pin, Eyelet	*Z - Socket, Eyelet*
C - Pin, PCB Flex Feedthrough	*D - Socket, PCB Flex Feedthrough*

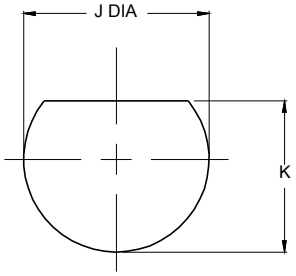

Recommended Panel Cut-Out

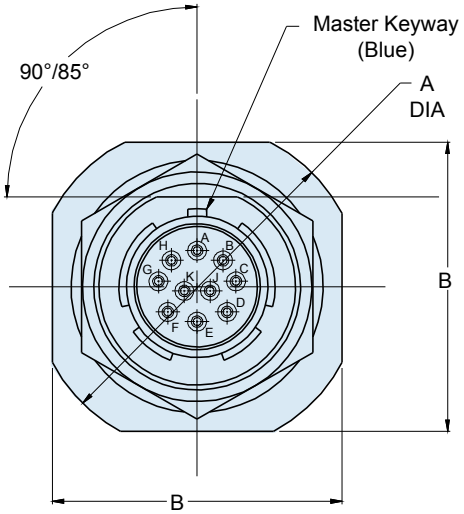

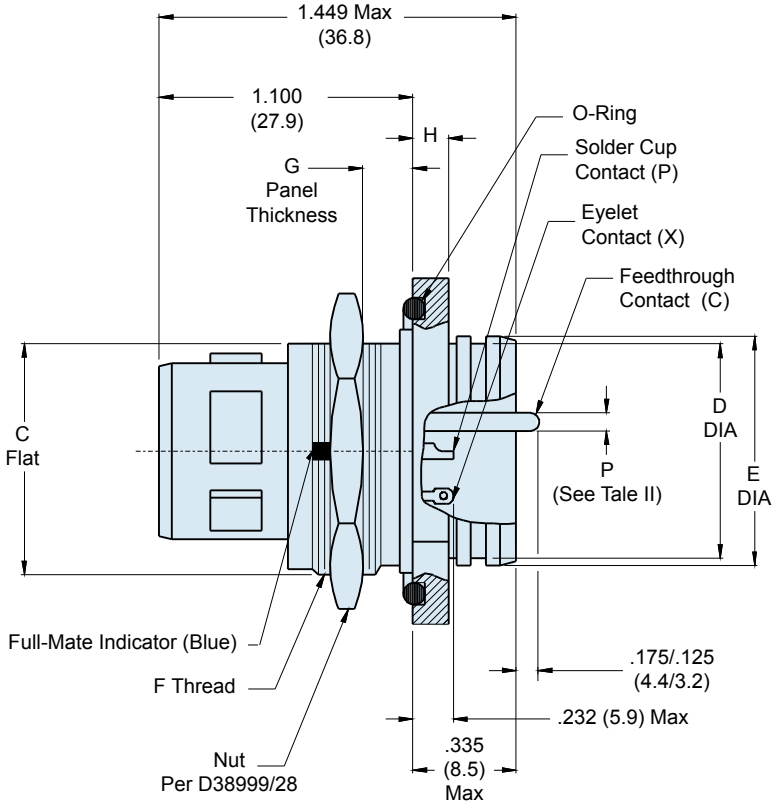

Dimensions in Inches (millimeters) are subject to change without notice.

© 2013 Glenair, Inc.

234-100-H7
Jam Nut Mount Hermetic Receptacle
MIL-DTL-38999 Series IV Type

Glenair®

How To Order: *Commercial*

Connector Series	Shell Style	Shell Size	Contact Termination
234 - Series IV Type	*H7* - Hermetic Jam Nut Mount	*11,13,15,17,19,21,23,25*	*P* - Pin, Solder Cup; *S* - Socket, Solder Cup; *X* - Pin, Eyelet; *Z* - Socket, Eyelet; *C* - Pin, PCB; *D* - Socket, PCB

234	-	100	-	H7	Z1	11	-	35	P	N

Connector Type	Connector Material / Finish	Insert Arrangement	Alternate Key Position
100 - Hermetic Receptacle	*ZL* - CRES, Nickel; *Z1* - CRES, Passivated	Per MIL-STD-1560; See Pages B-2 - B-4	*A, B, C, D, K, L, M, R, U* (*N* = Normal)

TABLE I: CONNECTOR DIMENSIONS

SHELL SIZE CODE	SHELL SIZE	A DIA	B FLATS ±.018(0.5)	C FLAT	D DIA	E DIA ±.010(0.3)	F THREAD ISO METRIC	G ±.033(0.8)	H ±.012(0.3)
B	11	1.362(34.6)	1.250(31.8)	.754(19.2) .745(18.9)	.733(18.6) .716(18.2)	.769(19.5)	M20 X 1.0-6g	.092(2.3)	.106(2.7)
C	13	1.511(38.4) 1.488(37.8)	1.376(35.0)	.941(23.9) .932(23.7)	.858(21.8) .839(21.3)	.899(22.8)	M25 X 1.0-6g	.092(2.3)	.106(2.7)
D	15	1.637(41.6) 1.614(41.0)	1.502(38.2)	1.065(27.1) 1.056(26.8)	.984(25.0) .968(24.6)	1.025(26.0)	M28 X 1.0-6g	.092(2.3)	.106(2.7)
E	17	1.763(44.8) 1.740(44.2)	1.624(41.2)	1.190(30.2) 1.181(30.0)	1.110(28.2) 1.091(27.7)	1.147(29.1)	M32 X 1.0-6g	.092(2.3)	.106(2.7)
F	19	1.948(49.5) 1.925(48.9)	1.813(46.1)	1.316(33.4) 1.306(33.2)	1.236(31.4) 1.220(31.0)	1.273(32.3)	M35 X 1.0-6g	.092(2.3)	.137(3.5)
G	21	2.074(52.7) 2.051(52.1)	1.939(49.3)	1.441(36.6) 1.431(36.3)	1.358(34.5) 1.342(34.1)	1.399(35.5)	M38 X 1.0-6g	.092(2.3)	.137(3.5)
H	23	2.200(55.9) 2.177(55.3)	2.061(52.3)	1.565(39.8) 1.556(39.5)	1.484(37.7) 1.468(37.3)	1.525(38.7)	M41 X 1.0-6g	.092(2.3)	.137(3.5)
J	25	2.326(59.1) 2.299(58.4)	2.187(55.5)	1.692(43.0) 1.681(42.7)	1.610(40.9) 1.594(40.5)	1.647(41.8)	M44 X 1.0-6g	.092(2.3)	.137(3.5)

TABLE I (CONTINUED): CUT-OUT DIMENSIONS

SHELL SIZE CODE	J DIA ±.005 (0.1)	K ±.005 (0.1)
B	.825 (20.96)	.771 (19.59)
C	1.010 (25.65)	.955 (24.26)
D	1.135 (28.83)	1.085 (27.56)
E	1.260 (32.01)	1.210 (30.73)
F	1.385 (35.18)	1.335 (33.91)
G	1.510 (38.35)	1.460 (37.08)
H	1.635 (41.53)	1.585 (40.26)
J	1.760 (44.70)	1.710 (43.43)

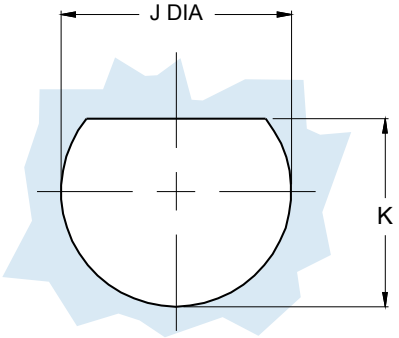

Recommended Panel Cut-Out

HERMETIC LEAK RATE MOD CODES

Designator	Required Leak Rate
–585A	1 x 10^{-10} cc Helium per second
–585B	1 x 10^{-9} cc Helium per second
–585C	1 x 10^{-8} cc Helium per second

WIRE ACCOMODATION

Contact Size	Wire Guage
22D	#22 - #28
20	#20 - #24
16	#16 - #20
12	#12 - #14

TABLE II: CONTACT SIZE

PRINTED CIRCUIT TAIL CONFIGURATIONS
CONTACT STYLE C AND D

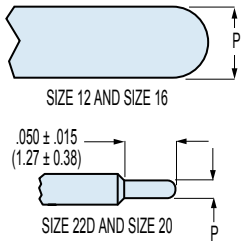

Contact Size	ø P
22D	.011 (0.28) .015 (0.38)
20	.024 (0.61) .028 (0.71)
16	.0635 (1.61) .0615 (1.56)
12	.095 (2.41) .093 (2.36)

sions in Inches (millimeters) are subject to change without notice.

© 2013 Glenair, Inc.

U.S. CAGE Code 06324

Printed in U.S.A.

B

D38999/45
Solder Mount Hermetic Receptacle
MIL-DTL-38999 Series IV

How To Order: *MS*

Basic Specification	Connector Material / Finish	Insert Arrangement	Alternate Key Position
D38999	*N - CRES, Nickel* *Y - CRES, Passivated*	Per MIL-STD-1560; See Pages B2 - B4	*A, B, C, D, K, L, M, R, U* (*N* = Normal)

D38999	/45	Y	B	35	P	N

Shell Style
/45 - Solder Mount

Shell Size

B - 11	*F - 19*
C - 13	*G - 21*
D - 15	*H - 23*
E - 17	*J - 25*

Contact Termination

P - Pin, Solder Cup	*S - Socket, Solder Cup*
X - Pin, Eyelet	*Z - Socket, Eyelet*
C - Pin, PCB Flex Feedthrough	*D - Socket, PCB Flex Feedthrough*

Non-Environmental Rear Accessory Thread Adapter Available for this Receptacle See P/N 980-002 on Page B-90

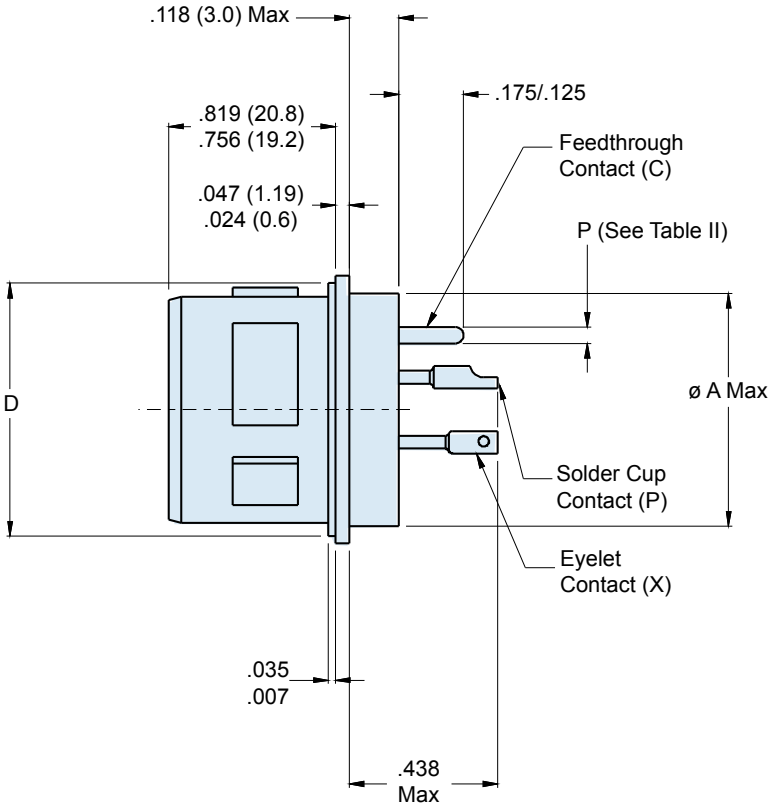

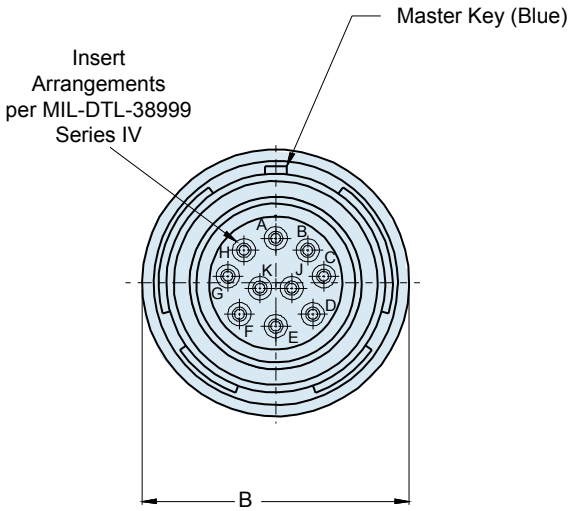

Dimensions in Inches (millimeters) are subject to change without notice.

© 2013 Glenair, Inc.
U.S. CAGE Code 06324
Printed in U.S.A.

234-100-H5
Solder Mount Hermetic Receptacle
MIL-DTL-38999 Series IV Type

How To Order: *Commercial*

Connector Series	Shell Style	Shell Size	Contact Termination
234 - Series IV Type	*H5* - Hermetic Solder Mount	11,13,15,17,19,21,23,25	*P* - Pin, Solder Cup *S* - Socket, Solder Cup *X* - Pin, Eyelet *Z* - Socket, Eyelet *C* - Pin, PCB *D* - Socket, PCB

234	-	100	-	H5	Z1	11	-	35	P	N

Connector Type	Connector Material / Finish	Insert Arrangement	Alternate Key Position
100 - Hermetic Receptacle	*ZL* - CRES, Nickel *Z1* - CRES, Passivated	Per MIL-STD-1560; See Pages B-2 - B-4	*A, B, C, D, K, L, M, R, U* (*N* = Normal)

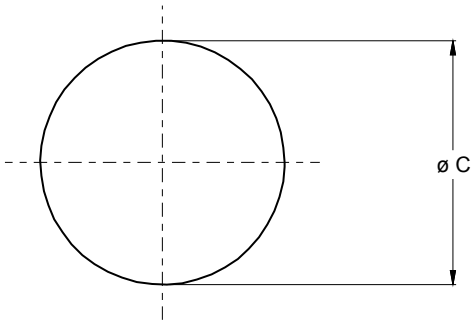

Recommended Panel Cut-Out

WIRE ACCOMODATION	
Contact Size	**Wire Guage**
22D	#22 - #28
20	#20 - #24
16	#16 - #20
12	#12 - #14

HERMETIC LEAK RATE MOD CODES	
Designator	**Required Leak Rate**
–585A	1 x 10^{-10} cc Helium per second
–585B	1 x 10^{-9} cc Helium per second
–585C	1 x 10^{-8} cc Helium per second

TABLE I: CONNECTOR DIMENSIONS

SHELL SIZE CODE	SHELL SIZE	ø A MAX	ø B MAX	ø C ±.005(0.1)	D
B	11	.783(19.9)	.862(21.9)	.789(20.0)	.793(20.1) .778(19.8)
C	13	.909(23.1)	.988(25.1)	.914(23.2)	.919(23.3) .904(23.0)
D	15	1.035(26.3)	1.110(28.2)	1.038(26.4)	1.044(26.5) 1.028(26.1)
E	17	1.157(29.4)	1.236(31.4)	1.164(29.6)	1.170(29.7) 1.155(29.3)
F	19	1.252(31.8)	1.331(33.8)	1.258(32.0)	1.294(32.9) 1.279(32.5)
G	21	1.378(35.0)	1.457(37.0)	1.383(35.1)	1.419(36.0) 1.404(35.7)
H	23	1.504(38.2)	1.583(40.2)	1.508(38.3)	1.544(39.2) 1.528(38.8)
J	25	1.630(41.4)	1.705(43.3)	1.643(41.7)	1.670(42.4) 1.654(42.0)

TABLE II: CONTACT SIZE

PRINTED CIRCUIT TAIL CONFIGURATIONS
CONTACT STYLE C AND D

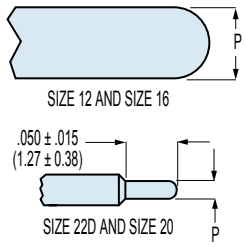

Contact Size	ø P
22D	.011 (0.28) .015 (0.38)
20	.024 (0.61) .028 (0.71)
16	.0635 (1.61) .0615 (1.56)
12	.095 (2.41) .093 (2.36)

Dimensions in Inches (millimeters) are subject to change without notice.

© 2013 Glenair, Inc.
U.S. CAGE Code 06324
Printed in U.S.A.

D38999/48
Weld Mount Hermetic Receptacle
MIL-DTL-38999 Series IV

How To Order: *MS*

Basic Specification	Connector Material / Finish	Insert Arrangement	Alternate Key Position
D38999	*N - CRES, Nickel* *Y - CRES, Passivated*	Per MIL-STD-1560; See Pages B2 - B4	*A, B, C, D, K, L, M, R, U* (*N* = Normal)

D38999	/48	Y	B	35	P	N

Shell Style
/48 - Weld Mount

Shell Size

B - 11	*F - 19*
C - 13	*G - 21*
D - 15	*H - 23*
E - 17	*J - 25*

Contact Termination

P - Pin, Solder Cup	*S - Socket, Solder Cup*
X - Pin, Eyelet	*Z - Socket, Eyelet*
C - Pin, PCB Flex Feedthrough	*D - Socket, PCB Flex Feedthrough*

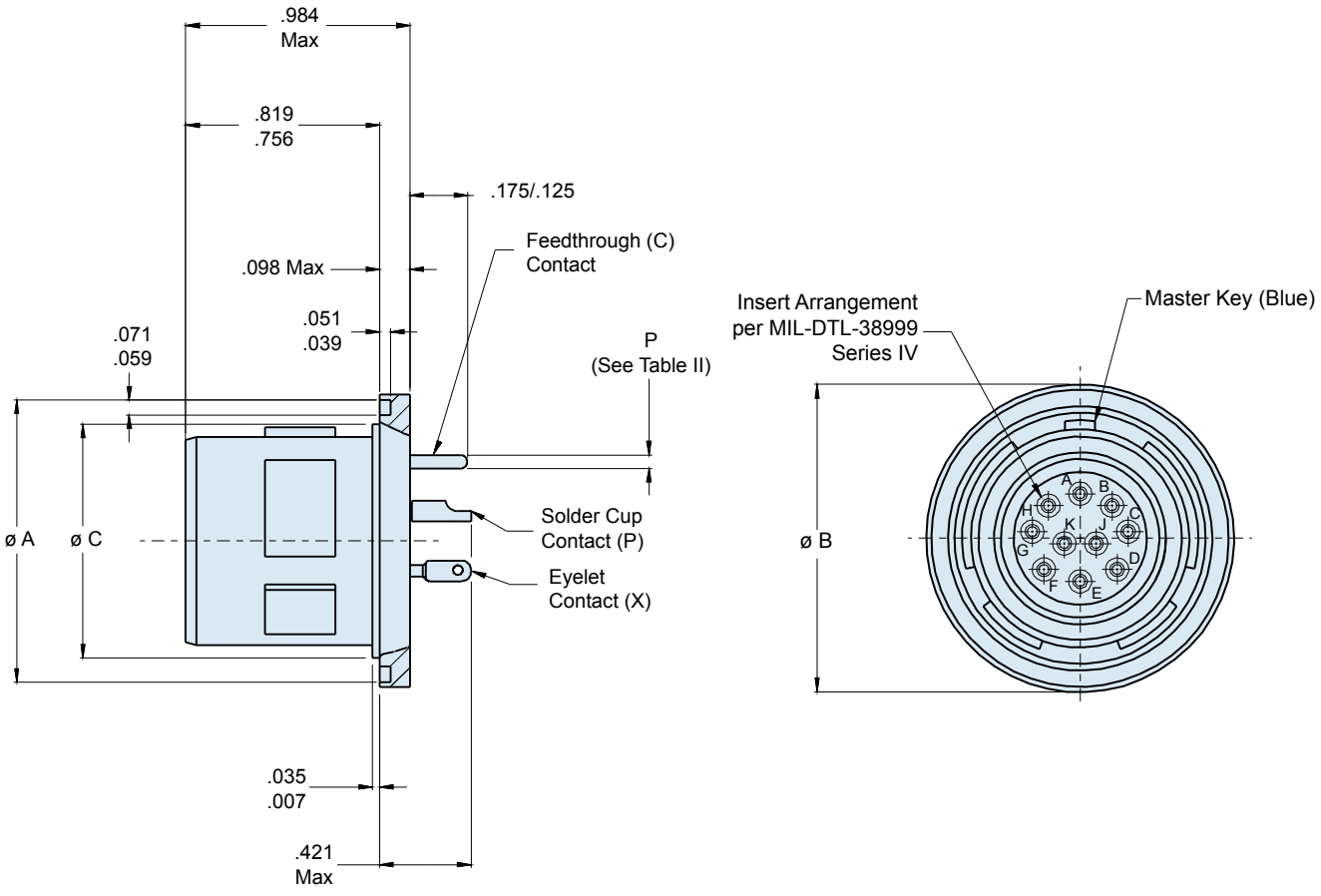

Consult Factory for Recommended Panel Cutout Dimensions

Dimensions in Inches (millimeters) are subject to change without notice.

© 2013 Glenair, Inc.
U.S. CAGE Code 06324
Printed in U.S.A.

234-100-H8
Weld Mount Hermetic Receptacle
MIL-DTL-38999 Series IV Type

Glenair®

How To Order: *Commercial*

234	-	100	-	H8	Z1	11	-	35	P	N

Connector Series
234 - *Series IV Type*

Shell Style
H8 - *Hermetic Weld Mount*

Shell Size
11,13,15,17,19,21,23,25

Contact Termination
P - *Pin, Solder Cup* *S* - *Socket, Solder Cup*
X - *Pin, Eyelet* *Z* - *Socket, Eyelet*
C - *Pin, PCB* *D* - *Socket, PCB*

Connector Type
100 - *Hermetic Receptacle*

Connector Material / Finish
ZL - *CRES, Nickel*
Z1 - *CRES, Passivated*

Insert Arrangement
Per MIL-STD-1560;
See Pages B-2 - B-4

Alternate Key Position
A, B, C, D, K, L, M, R, U
(*N* = Normal)

HERMETIC LEAK RATE MOD CODES	
Designator	**Required Leak Rate**
–585A	1 x 10^{-10} cc Helium per second
–585B	1 x 10^{-9} cc Helium per second
–585C	1 x 10^{-8} cc Helium per second

TABLE I: CONNECTOR DIMENSIONS

SHELL SIZE CODE	SHELL SIZE	ø A	ø B	ø C
B	11	1.035 (26.3) 1.024 (26.0)	1.106 (28.1) 1.094 (27.8)	.793 (20.1) .778 (19.8)
C	13	1.161 (29.5) 1.150 (29.2)	1.232 (31.3) 1.220 (31.0)	.919 (23.3) .904 (23.0)
D	15	1.287 (32.7) 1.276 (32.4)	1.358 (34.5) 1.346 (34.2)	1.044 (26.5) 1.029 (26.1)
E	17	1.374 (34.9) 1.362 (34.6)	1.445 (36.7) 1.433 (36.4)	1.170 (29.7) 1.155 (29.3)
F	19	1.520 (38.6) 1.508 (38.3)	1.591 (40.4) 1.579 (40.1)	1.294 (32.9) 1.279 (32.5)
G	21	1.661 (42.2) 1.650 (41.9)	1.732 (44.0) 1.720 (43.7)	1.419 (36.0) 1.404 (35.7)
H	23	1.827 (46.4) 1.815 (46.1)	1.898 (48.2) 1.886 (47.4)	1.544 (39.2) 1.529 (38.8)
J	25	1.913 (48.6) 1.902 (48.3)	1.984 (50.4) 1.972 (50.1)	1.669 (42.4) 1.654 (42.0)

TABLE II: CONTACT SIZE

PRINTED CIRCUIT TAIL CONFIGURATIONS
CONTACT STYLE C AND D



SIZE 12 AND SIZE 16

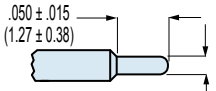

SIZE 22D AND SIZE 20

Contact Size	ø P
22D	.011 (0.28) .015 (0.38)
20	.024 (0.61) .028 (0.71)
16	.0635 (1.61) .0615 (1.56)
12	.095 (2.41) .093 (2.36)

WIRE ACCOMODATION	
Contact Size	**Wire Guage**
22D	#22 - #28
20	#20 - #24
16	#16 - #20
12	#12 - #14

Dimensions in Inches (millimeters) are subject to change without notice.

© 2013 Glenair, Inc.
U.S. CAGE Code 06324
Printed in U.S.A.

980-002
Non-Environmental Rear Accessory Thread Adapter
for MIL-DTL-38999/23 and /43

Connector Material and Finish
Z1 - CRES, Passivated
ZL - CRES, Nickel Plated

980-002	Z1	17
Basic Number		**Shell Size** *Table I*

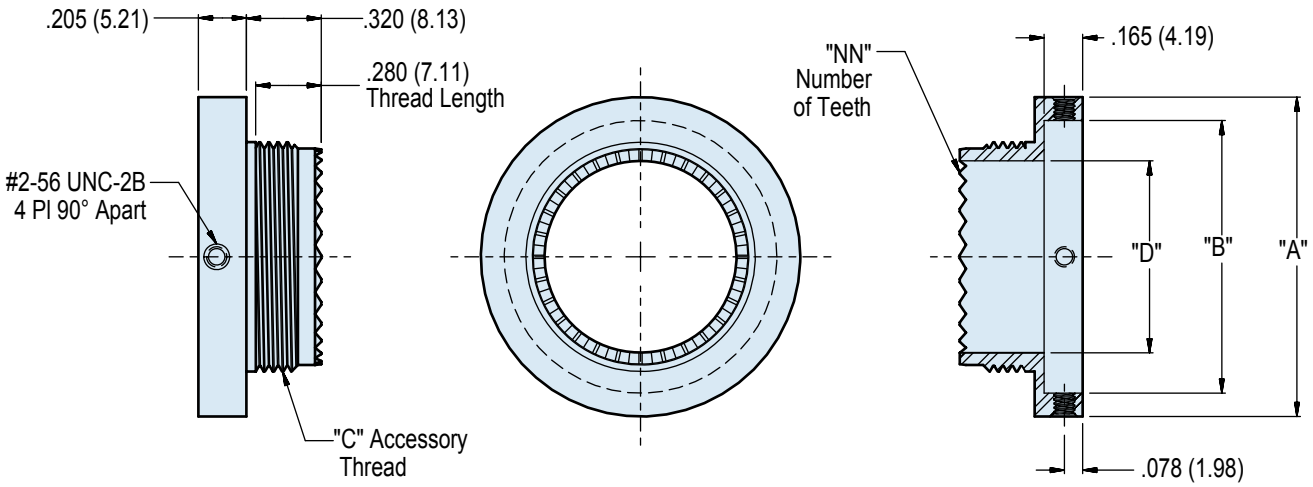

Dimensions in Inches (millimeters) are subject to change without notice.

© 2013 Glenair, Inc.
U.S. CAGE Code 06324
Printed in U.S.A.

TABLE I: CONNECTOR DIMENSIONS					
SHELL SIZE	A DIA	B DIA	C 1.0-6g 0.100R	D DIA MAX	NN TEETH
9	0.860 (21.84)	.662 (18.81) .656 (16.66)	M12	.346 (8.86)	12
11	0.985 (25.02)	.788 (20.02) .782 (19.86)	M15	.475 (12.07)	16
13	1.115 (28.32)	.917 (23.29) .911 (23.14)	M18	.589 (14.96)	20
15	1.240 (31.50)	1.042 (26.47) 1.037 (26.34)	M22	.714 (18.14)	24
17	1.360 (34.54)	1.165 (29.59) 1.159 (29.44)	M25	.839 (21.31)	28
19	1.488 (37.80)	1.291 (32.79) 1.285 (32.64)	M28	.945 (24.00)	32
21	1.615 (41.02)	1.418 (36.02) 1.412 (35.86)	M31	1.070 (27.18)	36
23	1.740 (44.20)	1.543 (39.19) 1.537 (39.04)	M34	1.194 (30.33)	40
25	1.862 (47.29)	1.665 (42.29) 1.659 (42.14)	M37	1.320 (33.53)	44

APPLICATION NOTES

1. Assembly identified with manufacturer's name and PN, space permitting.
2. Material/Finish:
   Adapter—300 Series CRES/passivate
   or 300 Series CRES/nickel plate
   Set Screws—18-8 CRES/None
3. Glenair 980-002 is designed to adapt MIL-DTL-38999/23 or /43 jam-nut hermetic receptacles to use threaded rear backshells per specification.

Dimensions in Inches (millimeters) are subject to change without notice.

© 2013 Glenair, Inc.

SERIES 80

MIGHTY MOUSE

Hermetic Connectors with Durable Glass–to–Metal Sealing



The Series 80 Connector was originally developed as a smaller and lighter alternative to D38999 connectors for aerospace applications such as Attack Helicopters and Unmanned Aerial Vehicles. Today, the Series 80 Mighty Mouse serves in dozens of safety-critical defense, medical, industrial and geo-physical applications. Glenair offers hermetic versions of this popular connector series with 1 x 10^{-7}cc/helium per second leakage rate, stainless steel shells with vitreous glass sealing, standard material options plus Titanium and Inconel® versions, available space grade special screening, plus same-day delivery on most common shell sizes and layouts.



Glenair®

Glenair, Inc.
1211 Air Way
Glendale, CA
91201-2497
818-247-6000
sales@glenair.com
www.glenair.com

Series 800 Mighty Mouse Hermetic Connectors

Mighty Mouse Hermetic Connectors are supplied in six mating styles, including a triple-start threaded version, a push-pull quick-disconnect version and rugged bayonet-lock. All the connectors in the Series 80 family are available in hermetic versions with PC tail or solder cup terminations.

Made of stainless steel with a glass seal, Mighty Mouse hermetics are 100% tested to meet 1 X 10^{-7} cc/second helium leakage and an open face pressure rating of 1000 PSI.

Quick Selection Guide

Part Number	Description	Page
	Series 800 Mighty Mouse Product Selection Guide	C-2
	Series 800 Mighty Mouse Contact Arrangements	C-4
	Series 800 Mighty Mouse Straight PCB Footprints	C-9
	Series 800 Mighty Mouse Flange Gaskets 809-108	C-25
	Series 800 Mighty Mouse Recommended Torque Values	C-28
	Glenair Hermetic Connector Products Special Leak Rate Mod Codes	C-29
800-013	Series 800 How to Order Information	C-30
800-013-02 and 800-013-03	Square Flange Mount Connectors	C-32
800-013-07	Jam Nut Mount Connector	C-33
801-012	Series 801 How to Order Information	C-34
801-012-02	Square Flange Mount Connector	C-35
801-012-03	Solder Mount Connector	C-36
801-012-07	Jam Nut Mount Connector	C-37
801-012-013	Weld Mount Connector	C-38
801-059	Quick Coupling Connector with Co-Ax Pins Ordering Information	C-39
801-059-02	Flange Mount Quick Coupling Connector with Co-Ax Pins	C-40
801-059-03	Solder Mount Quick Coupling Connector with Co-Ax Pins	C-41
801-059-07	Jam Nut Mount Quick Coupling Connector with Co-Ax Pins	C-42
802-013	Series 802 How to Order Information	C-43
802-013-00	Front Mount Jam Nut Receptacle	C-44
802-013-02	Square Flange Mount Receptacle	C-45
802-013-03	Weld Mount Receptacle	C-46
802-013-07	Rear Mount Jam Nut Receptacle	C-47
802-040	Series 802 "Aqua Mouse" Connector Ordering Information	C-48
802-040-00	Front Panel Jam Nut Mount Connector, Coax Contacts	C-49
802-040-02	Front Panel Square Flange Mount Connector, Coax Contacts	C-50
802-040-03	Weld Mount Connector, Coax Contacts	C-51
802-040-07	Rear Panel Jam Nut Mount Connector, Coax Contacts	C-52
803-006	Series 803 How to Order Information	C-53
803-006-02 and 803-006-07	1/4 Turn Bayonet and Jam Nut Mount Connectors	C-54
804-006	Series 804 How to Order Information	C-55
804-006-00	Front Panel Jam Nut Mount Receptacle	C-56
804-006-07	Rear Panel Jam Nut Mount Receptacle	C-57
805-006	Series 805 How to Order Information	C-58
805-006-02	Square Flange Mount Connector	C-59
805-006-03	Solder Mount Connector	C-60
805-006-07	Jam Nut Mount Connector	C-61
805-006-013	Front Panel Weld Mount Connector	C-62

Hermetic Finishes

Plating Code	Material	Finish	Specification
Z1	Stainless Steel	Passivate	AMS-QQ-P-35
ZL	Stainless Steel	Electrodeposited Nickel	SAE-AMS-QQ-N-290, Class 2

Hermetic Materials

Shell, Barrel Coupling and Jam Nut (Hermetic)	Stainless steel per AMS-QQ-S-763
Front and Rear Insulators	Glass-filled liquid crystal polymer (LCP) in accordance with MIL-M-24519, Type GLP-30F
Grommet, Peripheral Seal and Interfacial Seal	Blended elastomer, 30% silicone per ZZ-R-765, 70% fluorosilicone per MIL-R-25988
Hermetic Insert	Vitreous glass
Contacts	Nickel-iron alloy per ASTM F30 (Alloy 52),50 microinches gold plated per ASTM B488 Type 3 Code C Class 1,27 over nickel plate per QQ-N-290 Class 2, 50-100 microinches
Adhesives	Silicone and epoxy
Potting Compound	Epoxy

© 2013 Glenair, Inc.

Series 80 Mighty Mouse
Product Selection Guide

The Series 800 Mighty Mouse Connector is designed for high-reliability commercial and aerospace/defense interconnect applications that require both robust environmental/EMI performance and reduced size and weight. The Series 80 Mighty Mouse Connector offers comparable performance to MIL-DTL-38999 Series interconnects with up to 71% weight and 52% size savings for similar contact layouts. The six versions of the product offer a variety of styles and features to suit just about any application.

	Series 800	Series 801
		
Description	Original Mighty Mouse with UNF Threads	Double-Start ACME Thread
Notes	A general purpose connector for high-speed Ethernet switches, tactical equipment and instrumentation.	More rugged keys and threads compared to Series 800. Faster mating, slightly larger than Series 800.
Number of Contacts	1 to 37	1 to 130
Coupling	Threaded Coupling with 4 ½ Turns to Full Mate	Threaded Coupling with 1 ½ Turns to Full Mate
Hermeticity	1 X10^{-7} cc/second maximum helium leak rate	1 X10^{-7} cc/second maximum helium leak rate
EMI Shielding	Good	Good
Vibration and Shock	37 g's Random Vibration; 300 g's Shock	37 g's Random Vibration; 300 g's Shock
Mating Cycles	2000 Cycles	2000 Cycles
Electrical Performance	#12: 23 AMP, 500 VAC #16: 13 AMP, 500 VAC #20: 7.5 AMP, 500 VAC #23: 5 AMP, 500 VAC	#12: 23 AMP, 500 VAC #16: 13 AMP, 500 VAC #20: 7.5 AMP, 500 VAC #23: 5 AMP, 500 VAC
Proven Performance Applications	Commercial air frame sensors; UAV telemetry; Tactical computers; field radios	Military air frame; Dismounted soldier; Tactical ground weaponry; Avionic (FLIR) systems

Dimensions in Inches (millimeters) are subject to change without notice.

© 2013 Glenair, Inc. U.S. CAGE Code 06324 Printed in U.S.A.

Series 802	Series 803	Series 804	Series 805
			
"Aqua Mouse" 3500 PSI	Bayonet	Push-Pull	Triple-Start ACME Thread
Rugged stainless steel, resists chemicals. For geophysical and underwater applications.	Quick-mating, light duty, general purpose. Not rated for immersion. 50 milliohms shell-to-shell resistance.	Breakaway connector for headsets and tactical equipment. Gold-plated spring for long mating life and superior EMI shielding.	"Clicker" ratchet mechanism and ground spring for military airframes and avionics boxes. Fast-mating, D38999 equivalent.
1 to 130	1 to 55	1 to 55	1 to 130
Threaded Coupling with UN Threads	Push-to-Mate, ¼ Turn to Lock	Quick-Disconnect	One Full Turn for Full Mate
1 X10^{-7} cc/second maximum helium leak rate	1 X10^{-7} cc/second maximum helium leak rate	1 X10^{-7} cc/second maximum helium leak rate	1 X10^{-7} cc/second maximum helium leak rate
Good	Fair	Very Good	Excellent
37 g's Random Vibration; 300 g's Shock	37 g's Random Vibration; 300 g's Shock	37 g's Random Vibration; 300 g's Shock	37 g's Random Vibration; 300 g's Shock
2000 Cycles	2000 Cycles SST	2000 Cycles	500 Cycles
#12: 23 AMP, 500 VAC #16: 13 AMP, 500 VAC #20: 7.5 AMP, 500 VAC #23: 5 AMP, 500 VAC	#12: 23 AMP, 500 VAC #16: 13 AMP, 500 VAC #20: 7.5 AMP, 500 VAC #23: 5 AMP, 500 VAC	#12: 23 AMP, 500 VAC #16: 13 AMP, 500 VAC #20: 7.5 AMP, 500 VAC #23: 5 AMP, 500 VAC	#12: 23 AMP, 500 VAC #16: 13 AMP, 500 VAC #20: 7.5 AMP, 500 VAC #23: 5 AMP, 500 VAC
Pipe line inspection equipment; Well logging; Amphibious vehicles; Unmanned submersibles	Soldier system radios; Autosport diagnostics; Airborne surveillance; Communication systems	Helmet breakaway connector; QDC battery; Missile applications; Weapon interconnects	Autosport; Military air frame; Joint Strike Fighter

Dimensions in Inches (millimeters) are subject to change without notice.

© 2013 Glenair, Inc.

U.S. CAGE Code 06324

Printed in U.S.A.

Series 80 Mighty Mouse
Contact Arrangements

SERIES 80 MIGHTY MOUSE CONTACT ARRANGEMENTS

Contact Size	Number of Contacts	Contact Arrangement					
		Series 800	Series 801	Series 802	Series 803	Series 804	Series 805
Size #23 Contacts #22-#28 AWG	3	5-3	5-3	5-3	5-3	5-3	Not Avail.
	4	6-4	6-4	6-4	6-4	6-4	8-4
	6	6-6	6-6	6-6	6-6	6-6	8-6
	7	6-7	6-7	6-7	6-7	6-7	8-7
	10	7-10	7-10	7-10	7-10	7-10	9-10
	13	8-13	8-13	8-13	8-13	8-13	10-13
	19	9-19	9-19	9-19	9-19	9-19	11-19
	26	10-26	10-26	10-26	10-26	10-26	12-26
	31	11-31	11-31	11-31	11-31	11-31	13-31
	37	12-37	13-37	12-37	12-37	12-37	15-37
	55	Not Avail.	16-55	14-55	14-55	14-55	18-55
	85	Not Avail.	17-85	15-85	Not Avail.	Not Avail.	19-85
	100	Not Avail.	19-100	19-100	Not Avail.	Not Avail.	21-100
	130	Not Avail.	21-130	21-130	Not Avail.	Not Avail.	23-130
Size #20HD Contacts #20-#24 AWG	3	6-23	6-23	6-23	6-23	6-23	8-23
	5	7-25	7-25	7-25	7-25	7-25	9-25
	8	8-28	8-28	8-28	8-28	8-28	10-28
	10	9-210	9-210	9-210	9-210	9-210	11-210
	20	12-220	13-220	12-220	12-220	12-220	15-220
	35	Not Avail.	16-235	14-235	14-235	14-235	18-235
	41	Not Avail.	17-241	15-241	Not Avail.	Not Avail.	19-241
	55	Not Avail.	19-255	19-255	Not Avail.	Not Avail.	19-255
	69	Not Avail.	21-269	21-269	Not Avail.	Not Avail.	23-269
Size #16 Contacts #16-#20 AWG	1	6-1	6-1	6-1	6-1	6-1	8-1
	2	8-2	8-2	8-2	8-2	8-2	10-2
	4	9-4	9-4	9-4	9-4	9-4	11-4
	5	10-5	10-5	10-5	10-5	10-5	12-5
	7	12-7	13-7	12-7	12-7	12-7	15-7
	12	Not Avail.	16-12	14-12	14-12	14-12	18-12
	14	Not Avail.	17-14	15-14	Not Avail.	Not Avail.	19-14
	19	Not Avail.	19-19	19-19	Not Avail.	Not Avail.	21-19
	22	Not Avail.	21-22	21-22	Not Avail.	Not Avail.	23-22
Size #12 Contacts #12-#14 AWG	1	7-1	7-1	7-1	7-1	7-1	9-1
	2	10-2	10-2	10-2	10-2	10-2	12-2
	2	12-2	13-2	12-2	12-2	12-2	15-2
	3	12-3	13-3	12-3	12-3	12-3	15-3
	5	Not Avail.	16-5	14-5	14-5	14-5	18-5
	7	Not Avail.	17-7	15-7	Not Avail.	Not Avail.	19-7
	12	Not Avail.	21-12	21-12	Not Avail.	Not Avail.	23-12
Size #8 Contacts #8 AWG	1	8-1	8-1	8-1	8-1	8-1	10-1
	2	Not Avail.	16-2	14-2	14-2	14-2	18-2
	3	Not Avail.	17-3	15-3	Not Avail.	Not Avail.	19-3
	4	Not Avail.	19-4	19-4	Not Avail.	Not Avail.	21-4
	5	Not Avail.	21-5	21-5	Not Avail.	Not Avail.	23-5

SERIES 80 MIGHTY MOUSE COMBO ARRANGEMENTS

	Contact Size and Qty					Contact Arrangement					
	#23	#20	#20HD	#16	#12	Series 800	Series 801	Series 802	Series 803	Series 804	Series 805
Contact Arrangements with Mixed Size (Combo) Layouts	4	2				8-200	8-200	8-200	8-200	8-200	10-200
	8	2				9-201	9-201	9-201	9-201	9-201	11-201
	4			2		9-200	9-200	9-200	9-200	9-200	11-200
	8			2		10-202	10-202	10-202	10-202	10-202	12-202
	4				2	10-201	10-201	10-201	10-201	10-201	12-201
	6				2	12-200	13-200	12-200	12-200	12-200	15-200
	10				2	12-201	13-201	12-201	12-201	12-201	15-201
	12				1	10-200	10-200	10-200	10-200	10-200	12-200

Dimensions in Inches (millimeters) are subject to change without notice.

© 2013 Glenair, Inc.
U.S. CAGE Code 06324
Printed in U.S.A.

Mating Face View of Pin Connector (socket connector numbers are reversed)

Contact Legend
#23 ∘ #20HD ◓ #20 ● #16 ◒ #12 ⊕

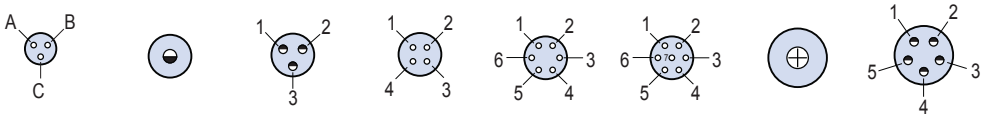

Series 800, 801, 802, 803, 804	5-3	6-1	6-23	6-4	6-6	6-7	7-1	7-25
Series 805	Not Avail.	8-1	8-23	8-4	8-6	8-7	9-1	9-25
No. of Contacts	3	1	3	4	6	7	1	5
Contact Size	#23	#16	#20HD	#23	#23	#23	#12	#20HD
DWV Voltage (VAC)	500	1800	750	500	500	500	1800	750
Current Rating (Amps)	5	13	7.5	5	5	5	23	7.5

Contact Legend
#23 #20HD #20 #16
#12 #8

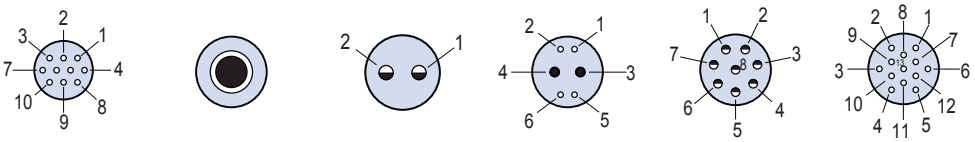

Series 800, 801, 802, 803, 804	7-10	8-1	8-2	8-200	8-28	8-13
Series 805	9-10	10-1	10-2	10-200	10-28	10-13
No. of Contacts	10	1	2	2 4	8	13
Contact Size	#23	#8	#16	#20 #23	#20HD	#23
DWV Voltage (VAC)	500	1800	1800	1000 500	750	500
Current Rating (Amps)	5	46	13	7 5	7.5	5

Contact Legend
#23 ∘ #20HD ◓ #20 ● #16 ◒ #12 ⊕

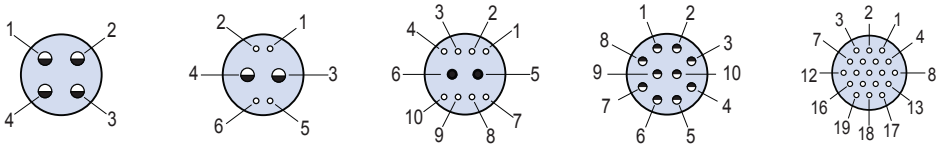

Series 800, 801, 802, 803, 804	9-4	9-200	9-201	9-210	9-19
Series 805	11-4	11-200	11-201	11-210	11-19
No. of Contacts	4	2 4	2 8	10	19
Contact Size	#16	#16 #23	#20 #23	#20HD	#23
DWV Voltage (VAC)	1800	1800 500	1000 500	750	500
Current Rating (Amps)	13	13 5	7.5 5	7.5	5

Contact Legend
#23 ∘ #20HD ◓ #20 ● #16 ◒ #12 ⊕

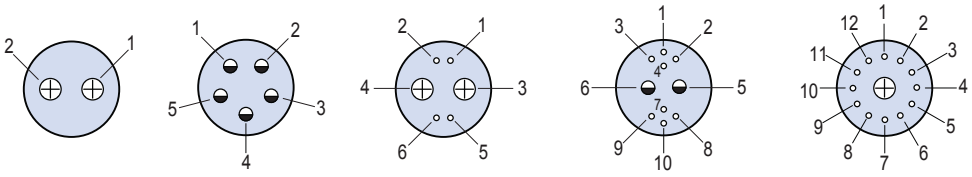

Series 800, 801, 802, 803, 804	10-2	10-5	10-201	10-202	10-200
Series 805	12-2	12-5	12-201	12-202	12-200
No. of Contacts	2	5	2 4	2 8	1 12
Contact Size	#12	#16	#12 #23	#16 #23	#12 #23
DWV Voltage (VAC)	1800	1800	1800 500	1800 500	1800 500
Current Rating (Amps)	23	13	23 5	13 5	23 5

Dimensions in Inches (millimeters) are subject to change without notice.

© 2013 Glenair, Inc. U.S. CAGE Code 06324 Printed in U.S.A.

Series 80 Mighty Mouse
Contact Arrangements

Mating Face View of Pin Connector (socket connector numbers are reversed)

Contact Legend
#23
#20HD
#20
#16
#12

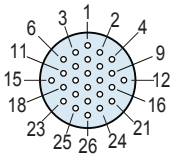
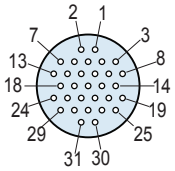
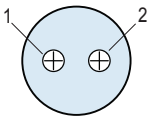
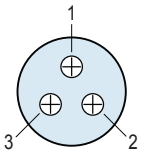
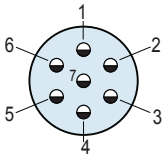

Series 800, 802, 803, 804	10-26	11-31	12-2	12-3	12-7
Series 801	10-26	11-31	13-2	13-3	13-7
Series 805	12-26	13-31	15-2	15-3	15-7
No. of Contacts	26	31	2	3	7
Contact Size	#23	#23	#12	#12	#16
DWV Voltage (VAC)	500	500	1800	1800	1800
Current Rating (Amps)	5	5	23	23	13

Contact Legend
#23 #20HD #20 #16
#12 #8

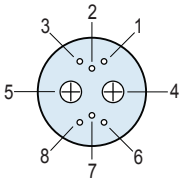
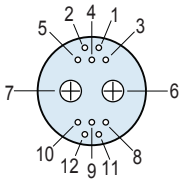
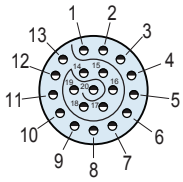
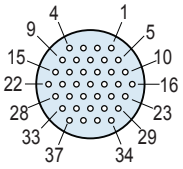
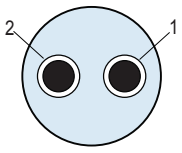

Series 800	12-200	12-201	12-220	12-37	Not Avail.
Series 802, 803, 804	12-200	12-201	12-220	12-37	14-2
Series 801	13-200	13-201	13-220	13-37	16-2
Series 805	15-200	15-201	15-220	15-37	18-2
No. of Contacts	2 6	2 10	20	37	2
Contact Size	#12 #23	#12 #23	#20HD	#23	#8
DWV Voltage (VAC)	1800 500	1800 500	750	500	1800
Current Rating (Amps)	23 5	23 5	7.5	5	46

Contact Legend
#23
#20HD
#20
#16
#12

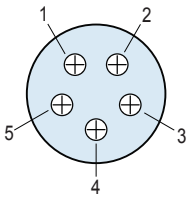
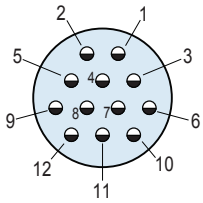
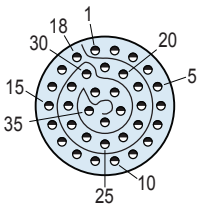
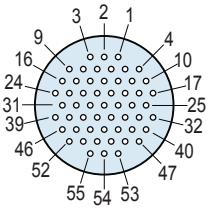

Series 802, 803, 804	14-5	14-12	14-235	14-55
Series 801	16-5	16-12	16-235	16-55
Series 805	18-5	18-12	18-235	18-55
No. of Contacts	5	12	35	55
Contact Size	#12	#16	#20HD	#23
DWV Voltage (VAC)	1800	1800	750	500
Current Rating (Amps)	23	13	7.5	5

Dimensions in Inches (millimeters) are subject to change without notice.

© 2013 Glenair, Inc.

Mating Face View of Pin Connector (socket connector numbers are reversed)

Contact Legend
#23
#20HD
#20
#16
#12
#8

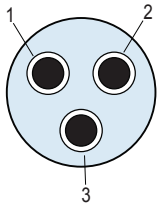

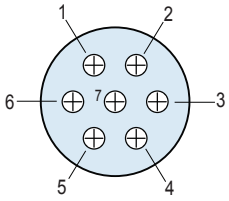

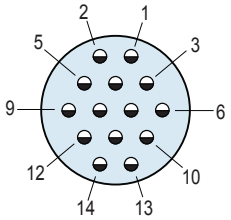

Series 801	17-3	17-7	17-14
Series 802	15-3	15-7	15-14
Series 805	19-3	19-7	19-14
No. of Contacts	3	7	14
Contact Size	#8	#12	#16
DWV Voltage (VAC)	1800	1800	1800
Current Rating (Amps)	46	23	13

Contact Legend
#23
#20HD
#20
#16
#12
#8

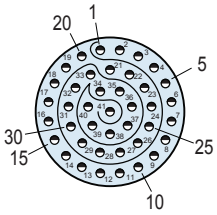

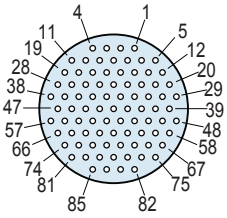

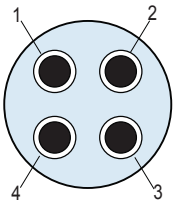

Series 801	17-241	17-85	19-4
Series 802	15-241	15-85	19-4
Series 805	19-241	19-85	21-4
No. of Contacts	41	85	4
Contact Size	#20HD	#23	#8
DWV Voltage (VAC)	750	500	1800
Current Rating (Amps)	7.5	5	46

Contact Legend
#23
#20HD
#20
#16
#12
#8

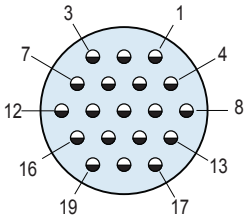

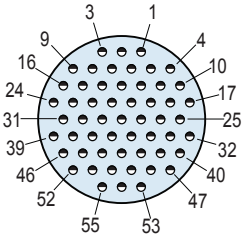

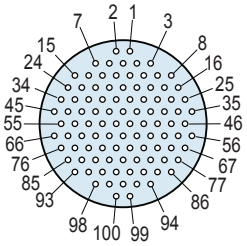

Series 801, 802	19-19	19-255	19-100
Series 805	21-19	21-255	21-100
No. of Contacts	19	55	100
Contact Size	#16	#20HD	#23
DWV Voltage (VAC)	1800	750	500
Current Rating (Amps)	13	7.5	5

Dimensions in Inches (millimeters) are subject to change without notice.

© 2013 Glenair, Inc.
U.S. CAGE Code 06324
Printed in U.S.A.

Series 80 Mighty Mouse
Contact Arrangements

Mating Face View of Pin Connector (socket connector numbers are reversed)

Contact Legend
#23
#20HD
#20
#16
#12
#8

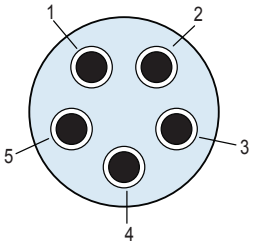

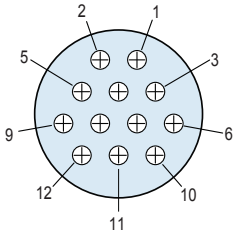

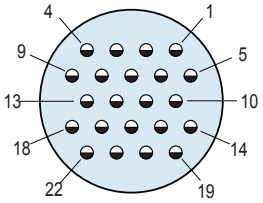

Series 801, 802	21-5	21-12	21-22
Series 805	23-5	23-12	23-22
No. of Contacts	5	12	22
Contact Size	#8	#12	#16
DWV Voltage (VAC)	1800	1800	1800
Current Rating (Amps)	46	23	13

Contact Legend
#23
#20HD
#20
#16
#12
#8

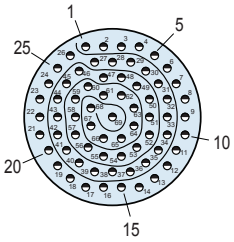

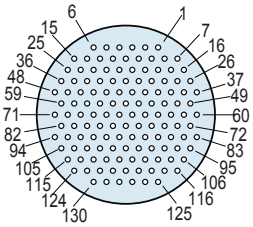

Series 801, 802	21-269	21-130
Series 805	23-269	23-130
No. of Contacts	69	130
Contact Size	#20HD	#23
DWV Voltage (VAC)	750	500
Current Rating (Amps)	7.5	5

Dimensions in Inches (millimeters) are subject to change without notice.

© 2013 Glenair, Inc.

Component Mounting Side of PCB



Insert Arrangement
5-3
3 #23 Contacts
.022 (0.56) Max. Dia. Tail

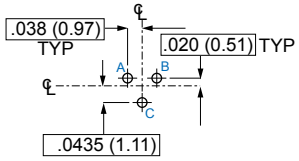

Pin Connector

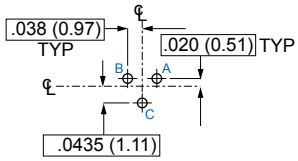

Socket Connector

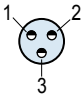

Insert Arrangement
6-23, 8-23
3 #20HD Contacts
.028 (0.56) Max. Dia. Tail

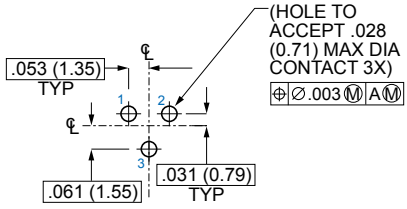

Pin Connector

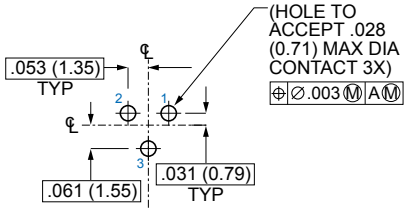

Socket Connector



Insert Arrangement
6-4, 8-4
4 #23 Contacts
.022 (0.56) Max. Dia. Tail

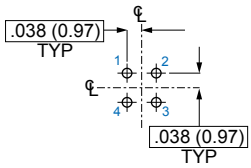

Pin Connector

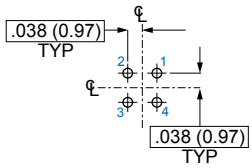

Socket Connector

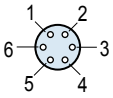

Insert Arrangement
6-6, 8-6
6 #23 Contacts
.022 (0.56) Max. Dia. Tail

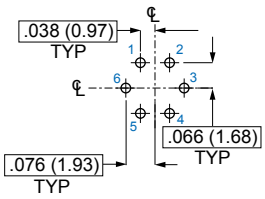

Pin Connector

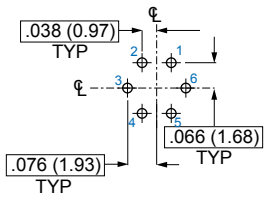

Socket Connector

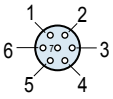

Insert Arrangement
6-7, 8-7
7 #23 Contacts
.022 (0.56) Max. Dia. Tail

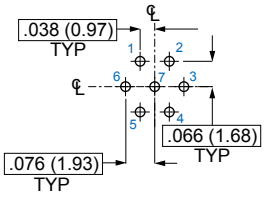

Pin Connector

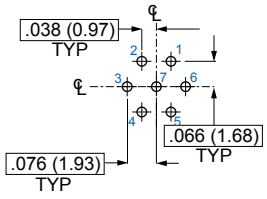

Socket Connector

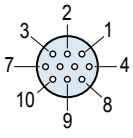

Insert Arrangement
7-10, 9-10
10 #23 Contacts
.022 (0.56) Max. Dia. Tail

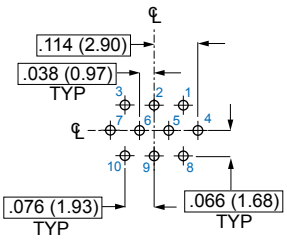

Pin Connector

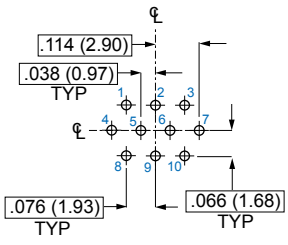

Socket Connector

Dimensions in Inches (millimeters) are subject to change without notice.

© 2013 Glenair, Inc.
U.S. CAGE Code 06324
Printed in U.S.A.

Series 80 Mighty Mouse
Straight PCB Footprints

Component Mounting Side of PCB

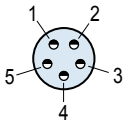

Insert Arrangement
7-25, 9-25
5 #20HD Contacts
.028 (0.71) Max. Dia. Tail

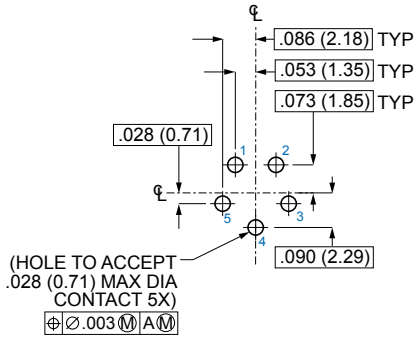

Pin Connector

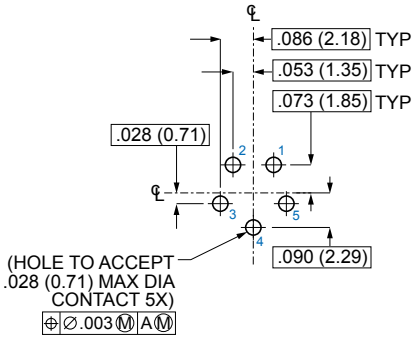

Socket Connector

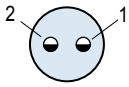

Insert Arrangement
8-2, 10-2
2 #16 Contacts

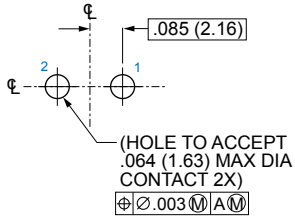

Pin Connector

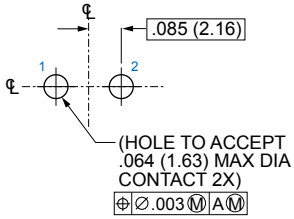

Socket Connector

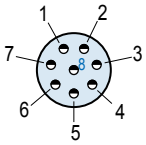

Insert Arrangement
8-28, 10-28
8 #20HD Contacts

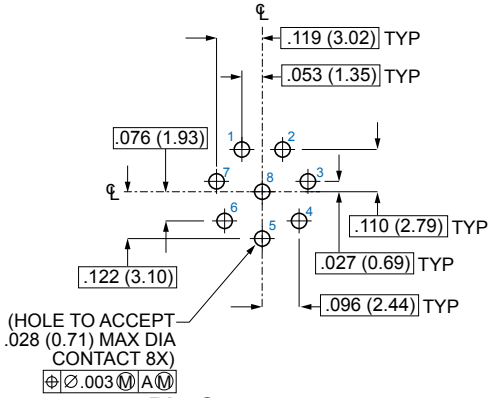

Pin Connector

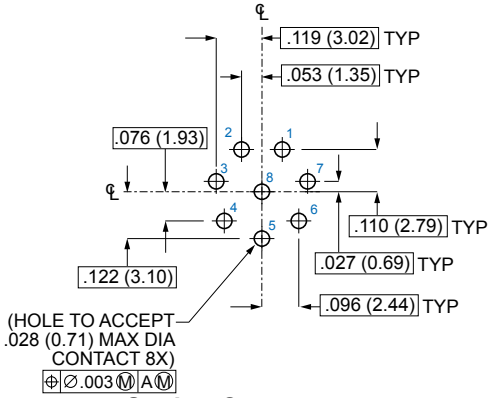

Socket Connector

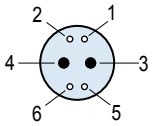

Insert Arrangement
8-200, 10-200
2 #20 Contacts
4 #23 Contacts

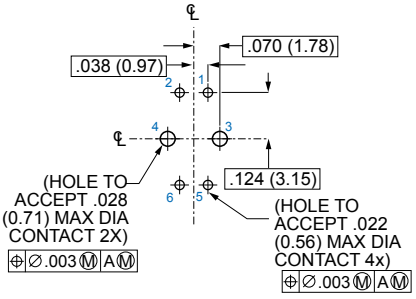

Pin Connector

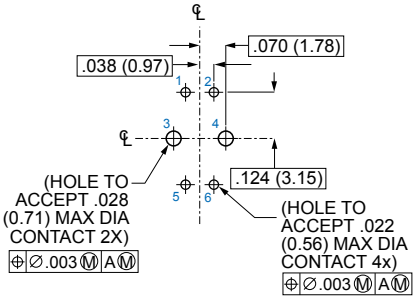

Socket Connector

Dimensions in Inches (millimeters) are subject to change without notice.

© 2013 Glenair, Inc.

Component Mounting Side of PCB

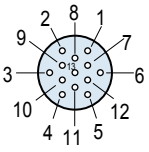

Insert Arrangement
8-13, 10-13
13 #23 Contacts
.022 (0.56) Max. Dia. Tail

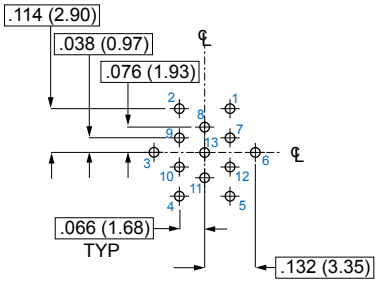

Pin Connector

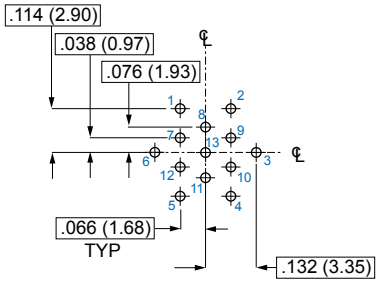

Socket Connector

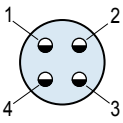

Insert Arrangement
9-4, 11-4
4 #16 Contacts

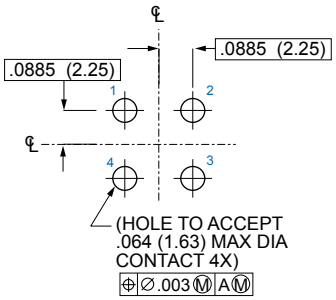

Pin Connector

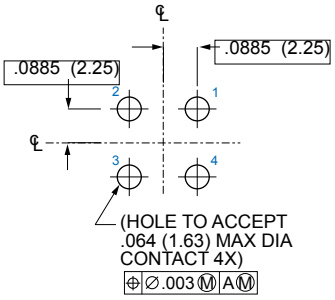

Socket Connector

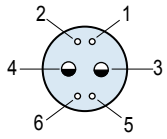

Insert Arrangement
9-200, 11-200
4 #23 Contacts
2 #16 Contacts

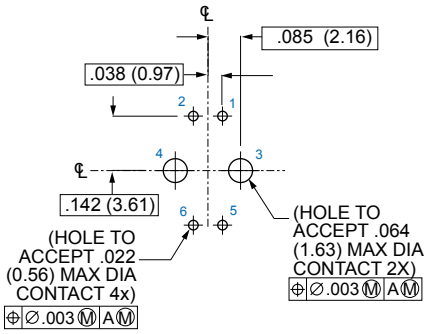

Pin Connector

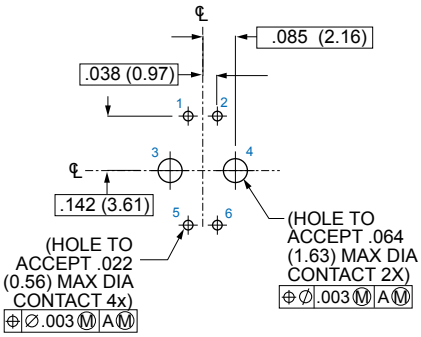

Socket Connector

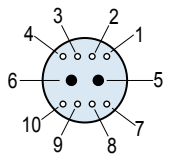

Insert Arrangement
9-201, 11-201
2 #20 Contacts
8 #23 Contacts

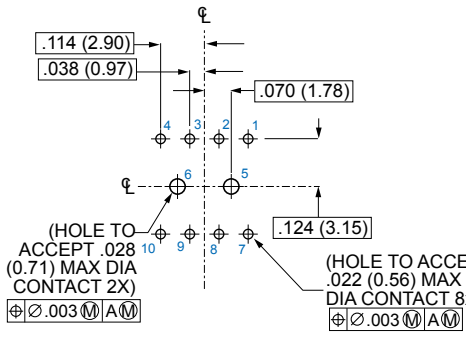

Pin Connector

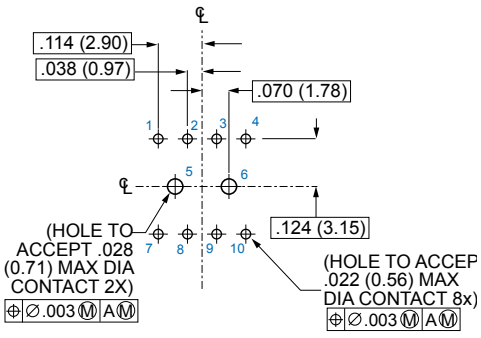

Socket Connector

Dimensions in Inches (millimeters) are subject to change without notice.

© 2013 Glenair, Inc.
U.S. CAGE Code 06324
Printed in U.S.A.

Series 80 Mighty Mouse
Straight PCB Footprints

Component Mounting Side of PCB

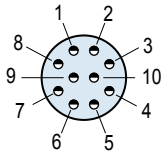

Insert Arrangement
9-210, 11-210
10 #20HD Contacts

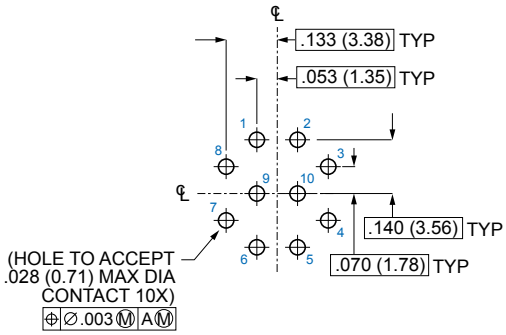

Pin Connector

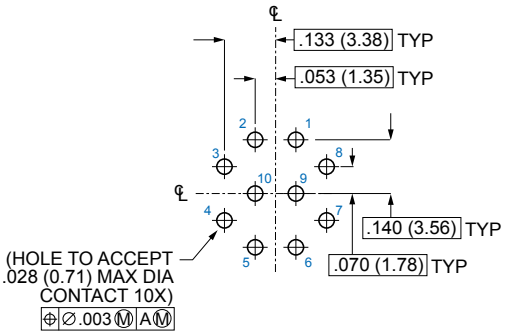

Socket Connector

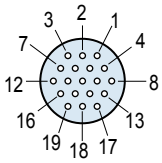

Insert Arrangement
9-19, 11-19
19 #23 Contacts
.022 (0.56) Max. Dia. Tail

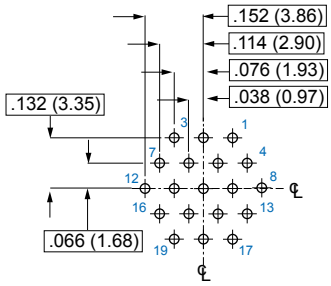

Pin Connector

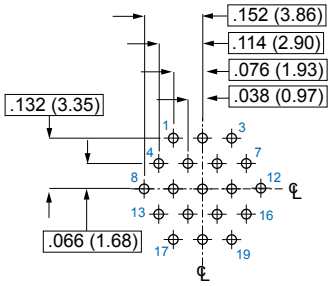

Socket Connector

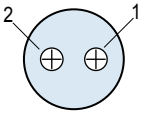

Insert Arrangement
10-2, 12-2
2 #12 Contacts

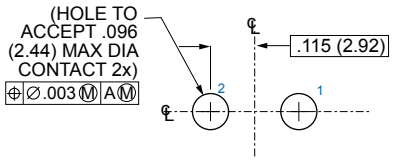

Pin Connector

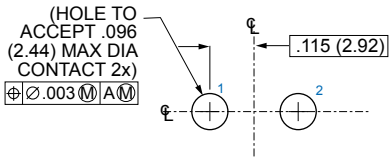

Socket Connector

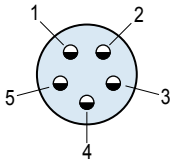

Insert Arrangement
10-5, 12-5
5 #16 Contacts

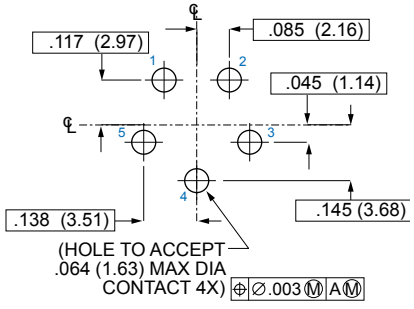

Pin Connector

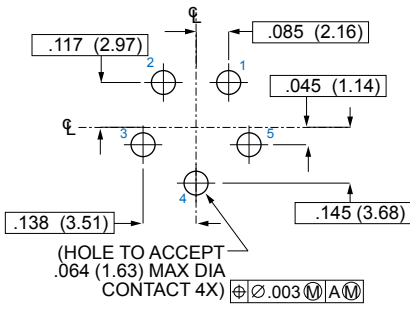

Socket Connector

Dimensions in Inches (millimeters) are subject to change without notice.

© 2013 Glenair, Inc.

Component Mounting Side of PCB

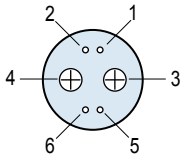

Insert Arrangement
10-201, 12-201
2 #12 Contacts
4 #23 Contacts

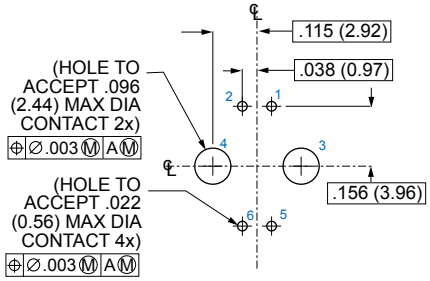

Pin Connector

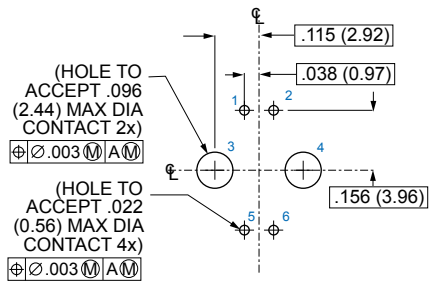

Socket Connector

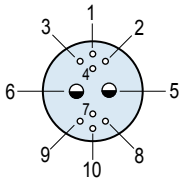

Insert Arrangement
10-202, 12-202
2 #16 Contacts
8 #23 Contacts

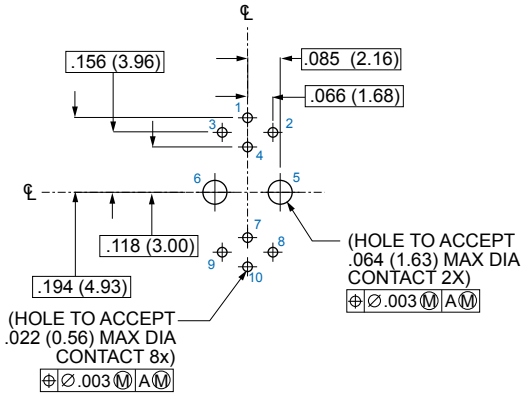

Pin Connector

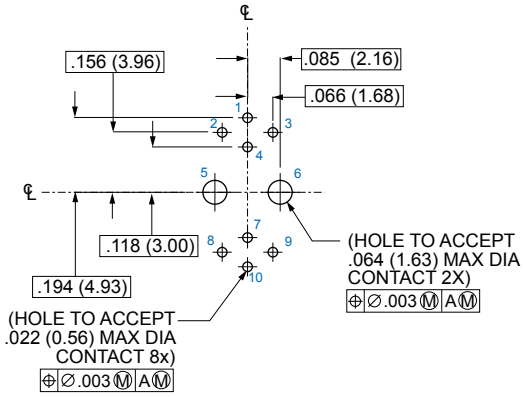

Socket Connector

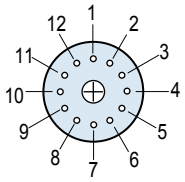

Insert Arrangement
10-200, 12-200
1 #12 Contact
12 #23 Contacts

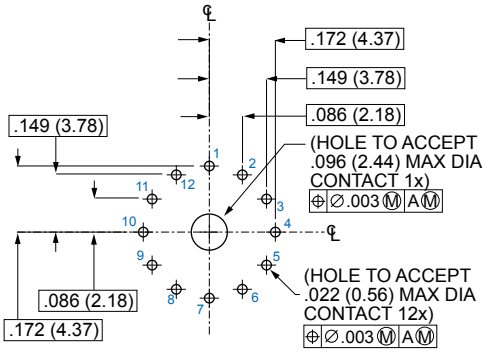

Pin Connector

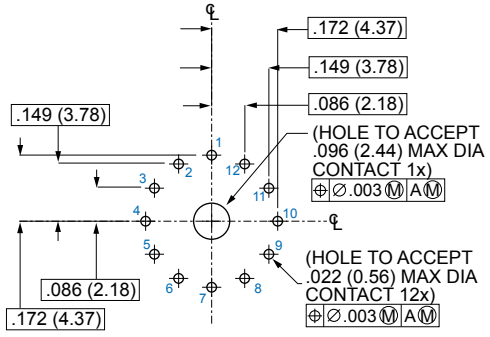

Socket Connector

Dimensions in Inches (millimeters) are subject to change without notice.

© 2013 Glenair, Inc.
U.S. CAGE Code 06324
Printed in U.S.A.

Series 80 Mighty Mouse
Straight PCB Footprints

Component Mounting Side of PCB

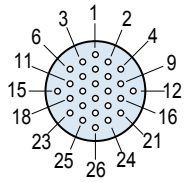

Insert Arrangement
10-26, 12-26
26 #23 Contacts
.022 (0.56) Max. Dia. Tail

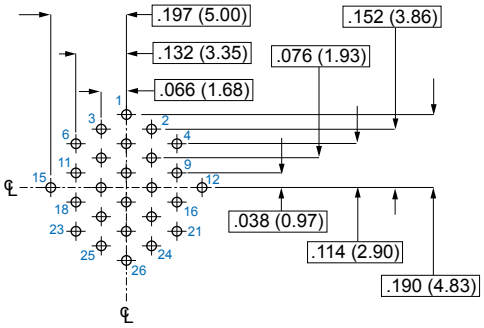

Pin Connector

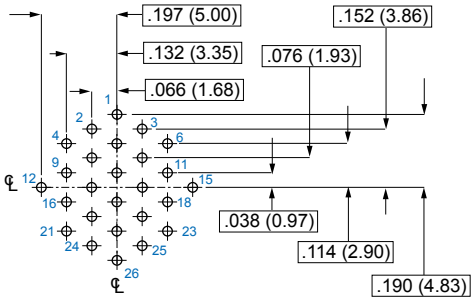

Socket Connector

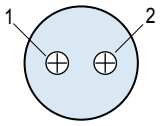

Insert Arrangement
12-2, 13-2, 15-2
2 #12 Contacts

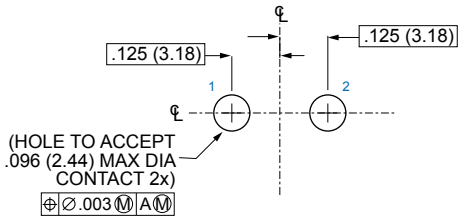

Pin Connector

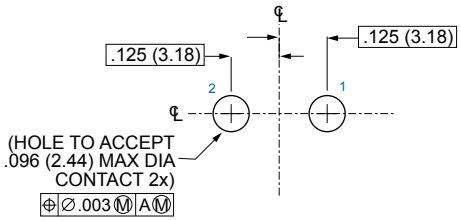

Socket Connector

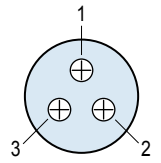

Insert Arrangement
12-3, 13-3, 15-3
3 #12 Contacts

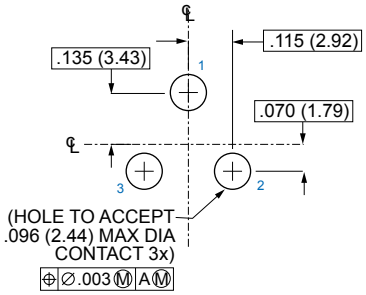

Pin Connector

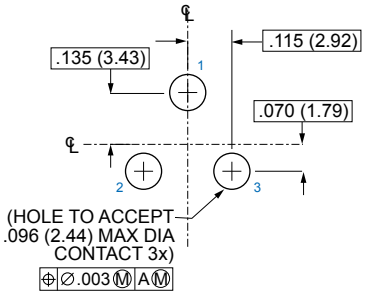

Socket Connector

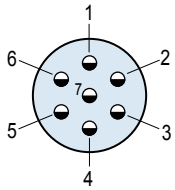

Insert Arrangement
12-7, 13-7, 15-7
7 #16 Contacts

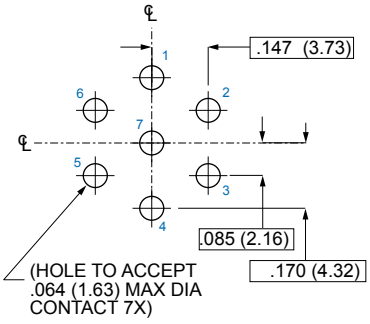

Pin Connector

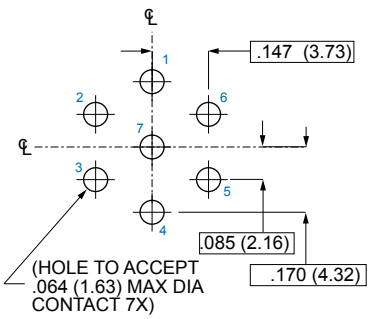

Socket Connector

Dimensions in Inches (millimeters) are subject to change without notice.

© 2013 Glenair, Inc.

Component Mounting Side of PCB

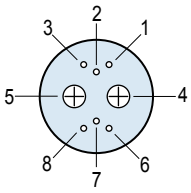

Insert Arrangement
12-200, 13-200, 15-200
2 #12 Contacts
6 #23 Contacts

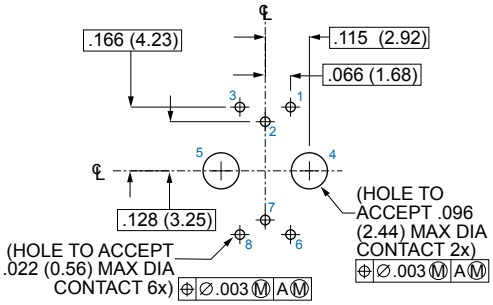

Pin Connector

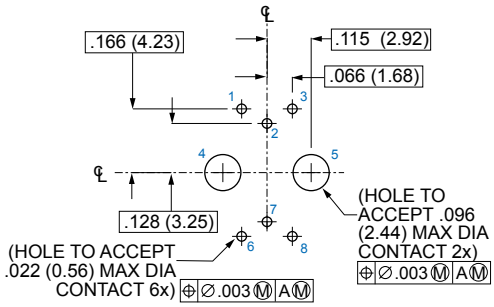

Socket Connector

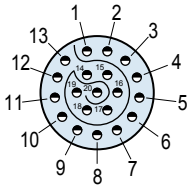

Insert Arrangement
12-220, 13-220, 15-220
20 #20HD Contacts

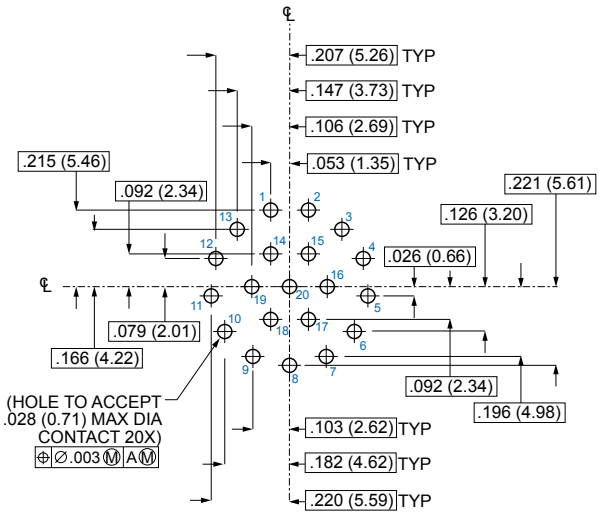

Pin Connector

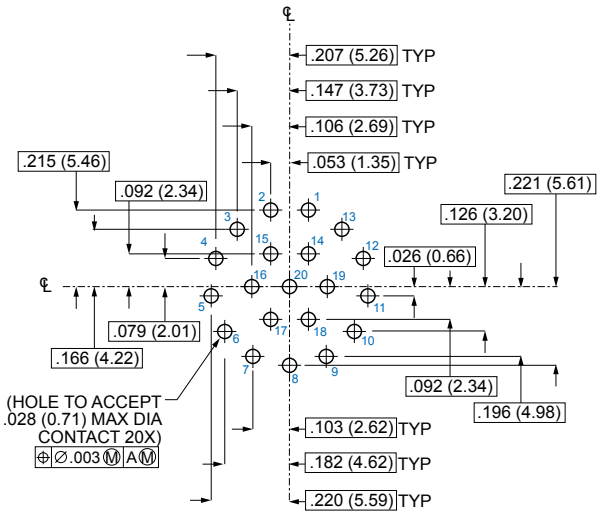

Socket Connector

Dimensions in Inches (millimeters) are subject to change without notice.

© 2013 Glenair, Inc.
U.S. CAGE Code 06324
Printed in U.S.A.

Series 80 Mighty Mouse
Straight PCB Footprints

Component Mounting Side of PCB

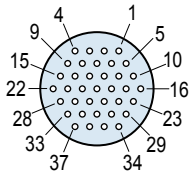

Insert Arrangement
12-37, 13-37, 15-37
37 #23 Contacts
.022 (0.56) Max. Dia. Tail

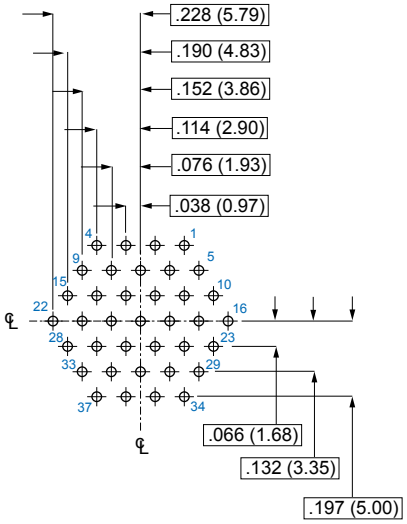

Pin Connector

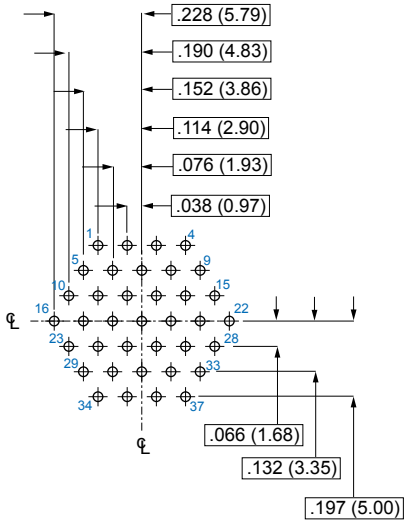

Socket Connector

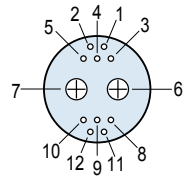

Insert Arrangement
12-201, 13-201, 15-201
2 #12 Contacts
10 #23 Contacts

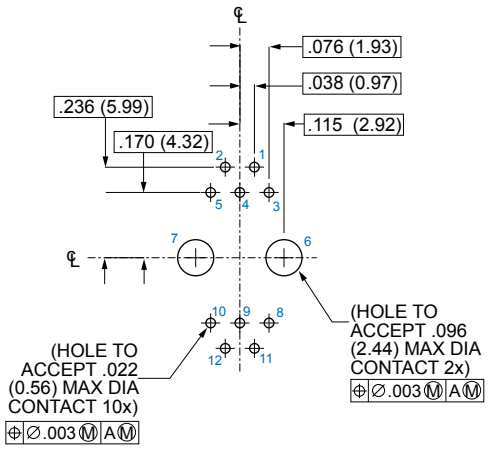

Pin Connector

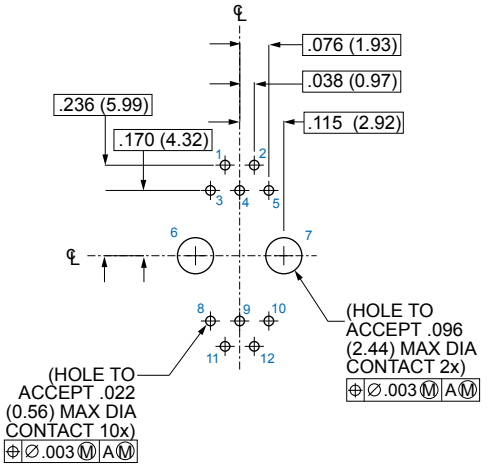

Socket Connector

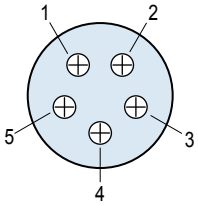

Insert Arrangement
14-5, 16-5, 18-5
5 #12 Contacts

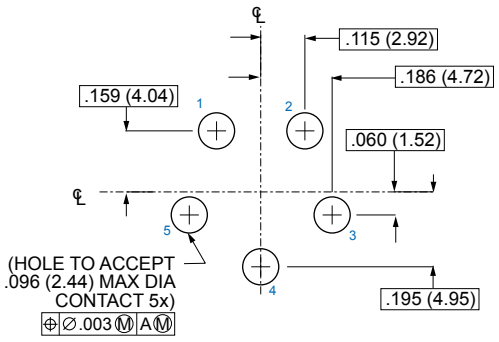

Pin Connector

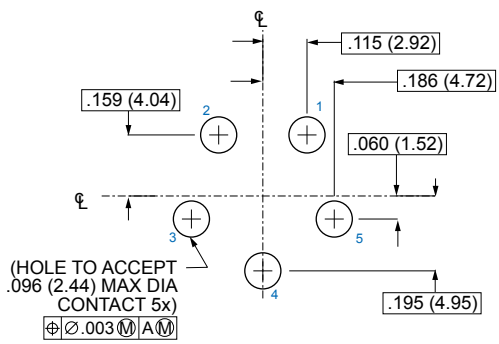

Socket Connector

Dimensions in Inches (millimeters) are subject to change without notice.

© 2013 Glenair, Inc.
U.S. CAGE Code 06324
Printed in U.S.A.

Component Mounting Side of PCB

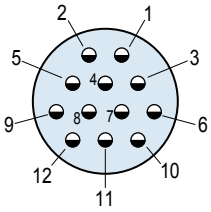

Insert Arrangement
14-12, 16-12, 18-12
12 #16 Contacts

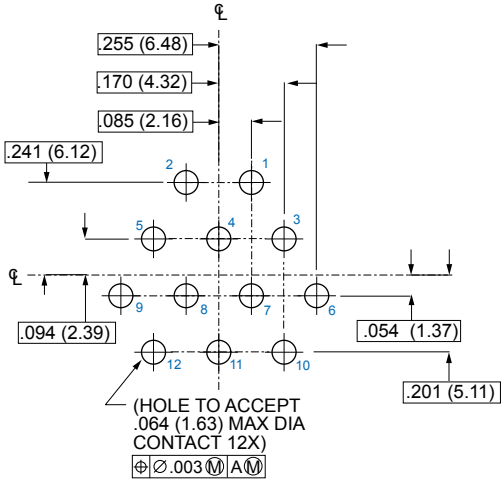

Pin Connector

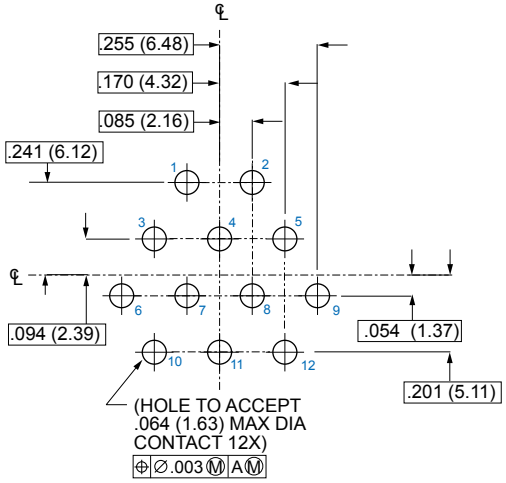

Socket Connector

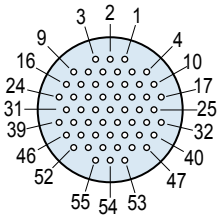

Insert Arrangement
14-55, 16-55, 18-55
55 #23 Contacts
.022 (0.56) Max. Dia. Tail

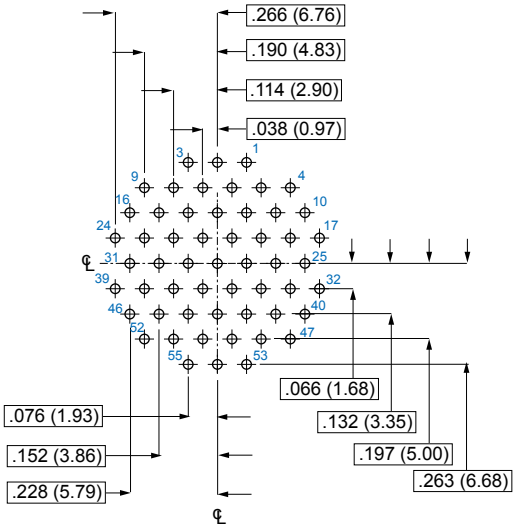

Pin Connector

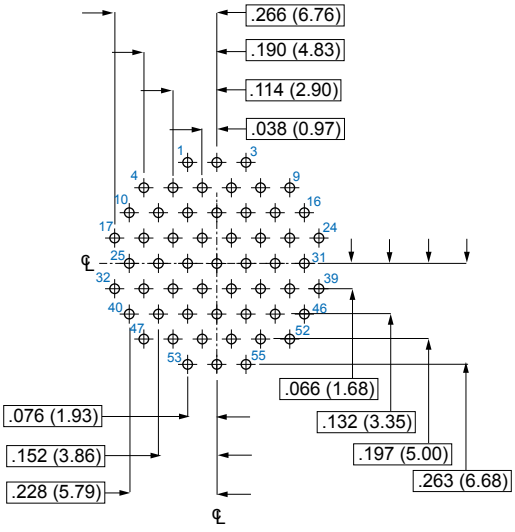

Socket Connector

Dimensions in Inches (millimeters) are subject to change without notice.

© 2013 Glenair, Inc.
U.S. CAGE Code 06324
Printed in U.S.A.

Series 80 Mighty Mouse
Straight PCB Footprints

Component Mounting Side of PCB

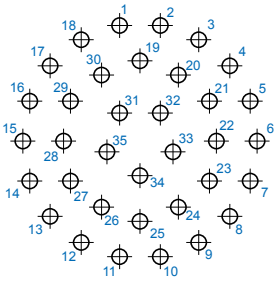

Pin Connector

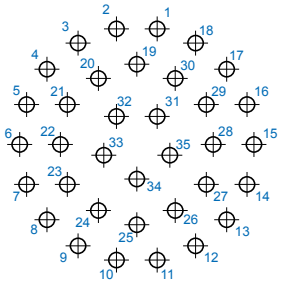

Socket Connector

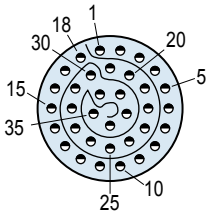

Insert Arrangement
14-235, 16-235,
18-235
35 #20HD Contacts
.028 (0.71) Max. Dia. Tail

Pin No.	X		Y		Pin No.	X		Y		Pin No.	X		Y	
	In.	mm.	In.	mm.		In.	mm.	In.	mm.		In.	mm.	In.	mm.
1	-.053	-1.35	.301	7.65	**13**	-.234	-5.94	-.196	-4.98	**25**	.000	0.00	-.209	-5.31
2	.053	1.35	.301	7.65	**14**	-.287	-7.29	-.104	-2.64	**26**	-.100	-2.54	-.172	-4.37
3	.153	3.89	.264	6.71	**15**	-.305	-7.75	.000	0.00	**27**	-.181	-4.60	-.104	-2.64
4	.234	5.94	.196	4.98	**16**	-.287	7.29	.104	2.64	**28**	-.199	-5.05	.000	0.00
5	.287	7.29	.104	2.64	**17**	-.234	-5.94	.196	4.98	**29**	-.181	-4.60	.104	2.64
6	.305	7.75	.000	0.00	**18**	-.153	-3.89	.264	6.71	**30**	-.100	-2.54	.172	4.37
7	.287	7.29	-.104	-2.64	**19**	.000	0.00	.209	5.31	**31**	-.053	-1.35	.073	1.85
8	.234	5.94	-.196	-4.98	**20**	.100	2.54	.172	4.37	**32**	.053	1.35	.073	1.85
9	.153	3.89	-.264	-6.71	**21**	.181	4.60	.104	2.64	**33**	.086	2.18	-.028	-0.71
10	.053	1.35	-.301	-7.65	**22**	.199	5.05	.000	0.00	**34**	.000	0.00	-.090	-2.29
11	-.053	-1.35	-.301	-7.65	**23**	.181	4.60	-.104	-2.64	**35**	-.086	-2.18	-.028	-0.71
12	-.153	-3.89	-.264	-6.71	**24**	.100	2.54	-.172	-4.37					

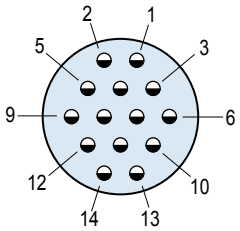

Insert Arrangement
15-14, 17-14, 19-14
14 #16 Contacts

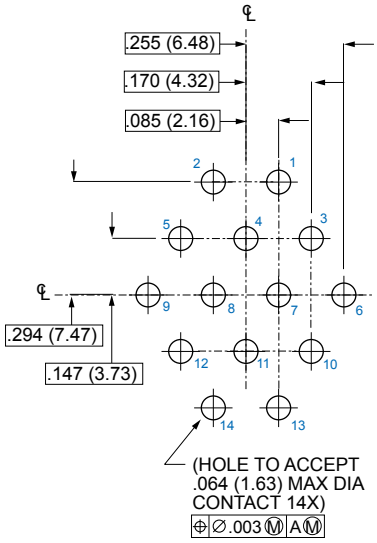

Pin Connector

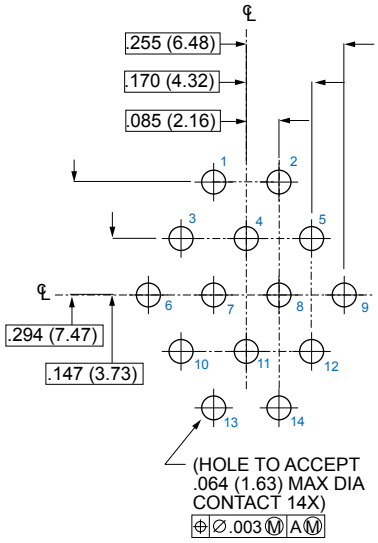

Socket Connector

Dimensions in Inches (millimeters) are subject to change without notice.

© 2013 Glenair, Inc.

Component Mounting Side of PCB

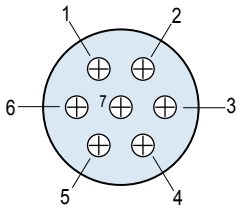

Insert Arrangement
15-7, 17-7, 19-7
7 #12 Contacts

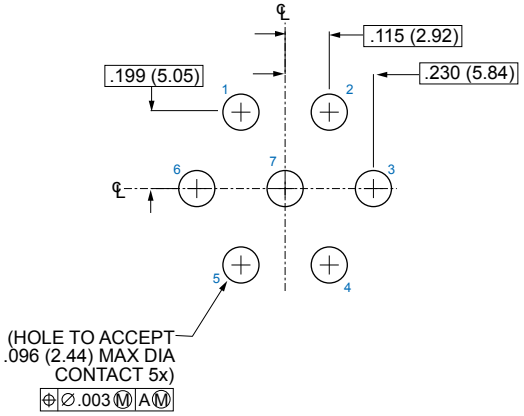

Pin Connector

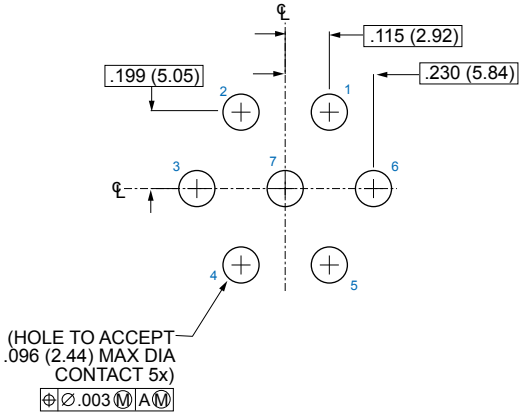

Socket Connector

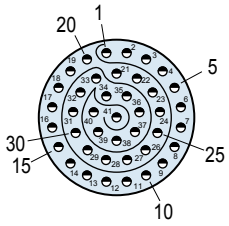

Insert Arrangement
15-241, 16-241, 18-241
41 #20HD Contacts
.028 (0.71) Max. Dia. Tail

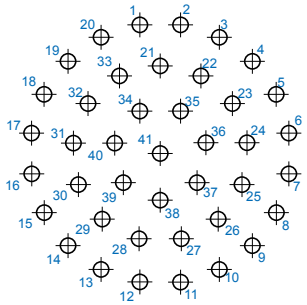

Pin Connector

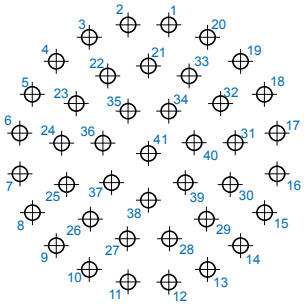

Socket Connector

Pin No.	X		Y		Pin No.	X		Y		Pin No.	X		Y	
	In.	mm.	In.	mm.		In.	mm.	In.	mm.		In.	mm.	In.	mm.
1	-.053	-1.35	.335	8.51	**15**	-.302	-7.67	-.154	-3.91	**29**	-.151	-3.84	-.171	-4.34
2	.053	1.35	.335	8.51	**16**	-.335	-8.51	-.053	-1.35	**30**	-.213	-5.41	-.081	-2.06
3	.154	3.91	.302	7.67	**17**	-.335	-8.51	.053	1.35	**31**	-.226	-5.74	.028	0.71
4	.240	6.10	.240	6.10	**18**	-.302	-7.67	.154	3.91	**32**	-.188	-4.78	.130	3.30
5	.302	7.67	.154	3.91	**19**	-.240	-6.10	.240	6.10	**33**	-.106	-2.69	.202	5.13
6	.335	8.51	.053	1.35	**20**	-.154	-3.91	.302	7.67	**34**	-.053	-1.35	.110	2.79
7	.335	8.51	-.053	-1.35	**21**	.000	0.00	.228	5.79	**35**	.053	1.35	.110	2.79
8	.302	7.67	-.154	-3.91	**22**	.106	2.69	.202	5.13	**36**	.119	3.02	.027	0.69
9	.240	6.10	-.240	-6.10	**23**	.188	4.78	.130	3.30	**37**	.096	2.44	-.076	-1.93
10	.154	3.91	-.302	-7.67	**24**	.226	5.74	.028	0.71	**38**	.000	0.00	-.122	-3.10
11	.053	1.35	-.335	-8.51	**25**	.213	5.41	-.081	-2.06	**39**	-.096	-2.44	-.076	-1.93
12	-.053	-1.35	-.335	-8.51	**26**	.151	3.84	-.171	-4.34	**40**	-.119	-3.02	.027	0.69
13	-.154	-3.91	-.302	-7.67	**27**	.055	1.40	-.222	-5.64	**41**	.000	0.00	.000	0.00
14	-.240	-6.10	-.240	-6.10	**28**	-.055	-1.40	-.222	-5.64					

Dimensions in Inches (millimeters) are subject to change without notice.

© 2013 Glenair, Inc.
U.S. CAGE Code 06324
Printed in U.S.A.

Series 80 Mighty Mouse
Straight PCB Footprints

Component Mounting Side of PCB

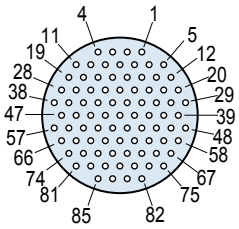

Insert Arrangement
15-85, 17-85, 19-85
85 #23 Contacts
.022 (0.56) Max. Dia. Tail

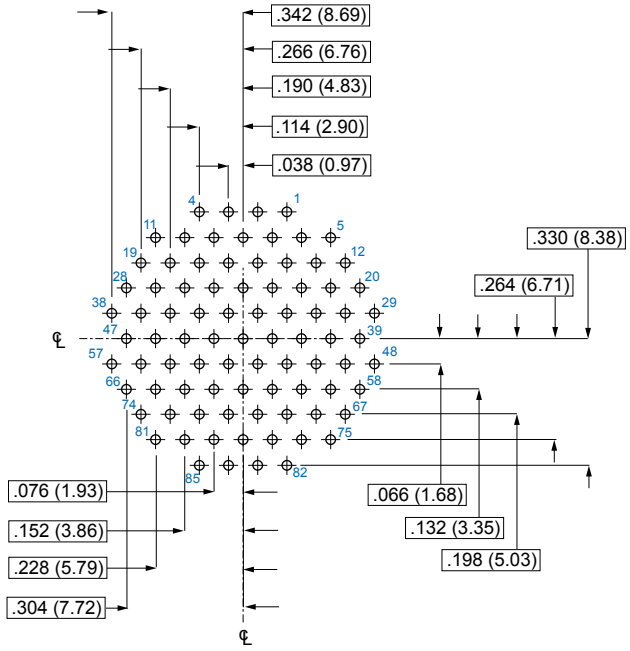

Pin Connector

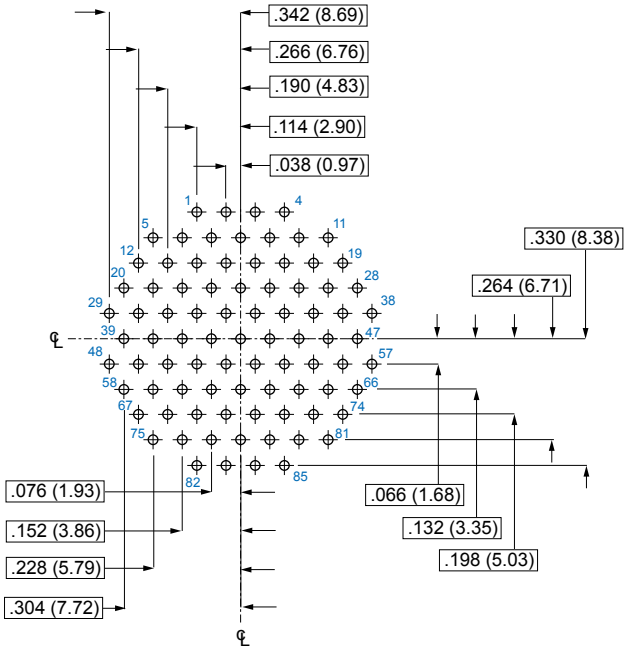

Socket Connector

Dimensions in Inches (millimeters) are subject to change without notice.

© 2013 Glenair, Inc.
U.S. CAGE Code 06324
Printed in U.S.A.

Component Mounting Side of PCB

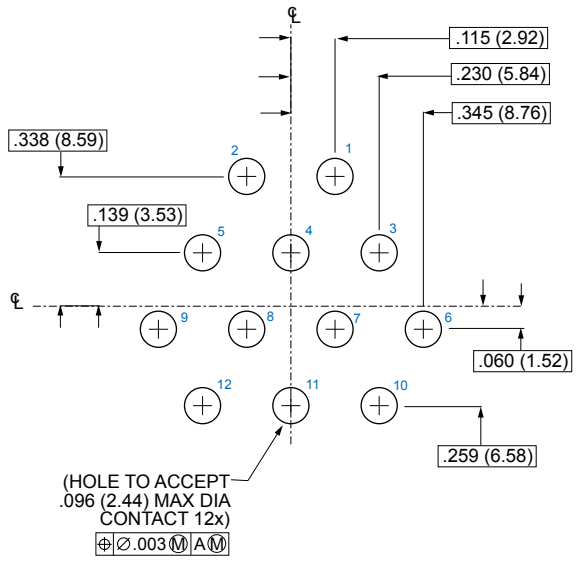

Pin Connector

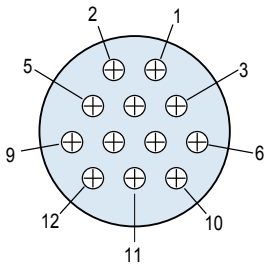

Insert Arrangement
21-12, 23-12
12 #12 Contacts

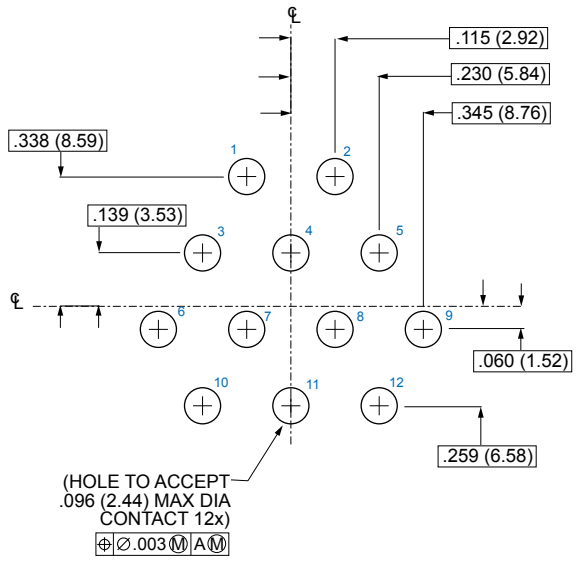

Socket Connector

Dimensions in Inches (millimeters) are subject to change without notice.

© 2013 Glenair, Inc. U.S. CAGE Code 06324 Printed in U.S.A.

Series 80 Mighty Mouse
Straight PCB Footprints

Component Mounting Side of PCB

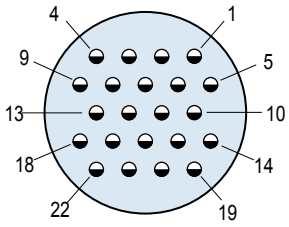

Insert Arrangement
21-22, 23-22
22 #16 Contacts

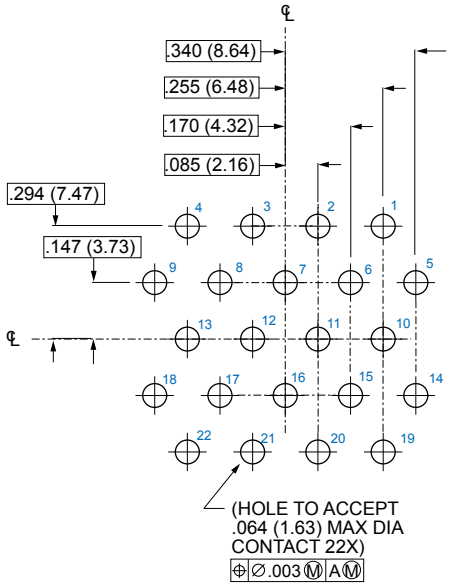

Pin Connector

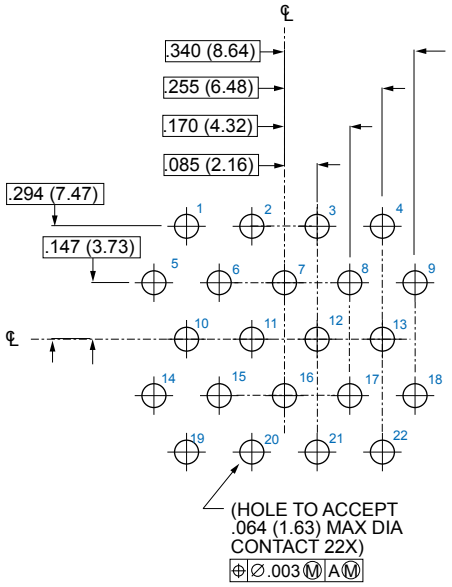

Socket Connector

Dimensions in Inches (millimeters) are subject to change without notice.

© 2013 Glenair, Inc.

Component Mounting Side of PCB

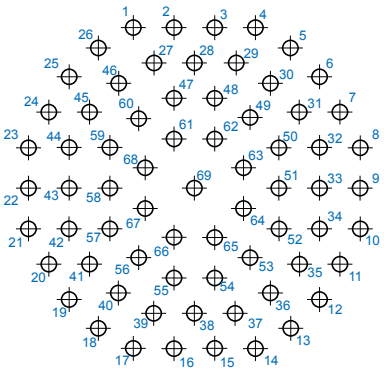

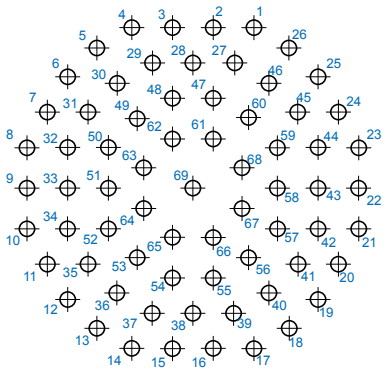

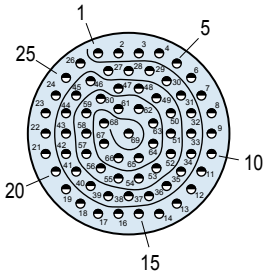

Insert Arrangement
21-269, 23-269
69 #20HD Contacts
.028 (0.71) Max. Dia. Tail

Pin Connector / Socket Connector

Pin No.	X In.	X mm.	Y In.	Y mm.	Pin No.	X In.	X mm.	Y In.	Y mm.	Pin No.	X In.	X mm.	Y In.	Y mm.
1	-.159	-4.04	.418	10.62	**24**	-.379	-9.63	.198	5.03	**47**	-.053	-1.35	.234	5.94
2	-.053	-1.35	.418	10.62	**25**	-.326	-8.28	.290	7.37	**48**	.053	1.35	.234	5.94
3	.053	1.35	.418	10.62	**26**	-.251	-6.38	.365	9.27	**49**	.145	3.68	.181	4.60
4	.159	4.04	.418	10.62	**27**	-.106	-2.69	.326	8.28	**50**	.220	5.59	.106	2.69
5	.251	6.38	.365	9.27	**28**	.000	0.00	.326	8.28	**51**	.220	5.59	.000	0.00
6	.326	8.28	.290	7.37	**29**	.106	-2.69	.326	8.28	**52**	.220	5.59	-.106	-2.69
7	.379	9.63	.198	5.03	**30**	.198	5.03	.273	6.93	**53**	.145	3.68	-.181	-4.60
8	.432	10.97	.106	2.69	**31**	.273	6.93	.198	5.03	**54**	.053	1.35	-.234	-5.94
9	.432	10.97	.000	0.00	**32**	.326	8.28	.106	2.69	**55**	-.053	-1.35	-.234	-5.94
10	.432	10.97	-.106	-2.69	**33**	.326	8.28	.000	0.00	**56**	-.145	-3.68	-.181	-4.60
11	.379	9.63	-.198	-5.03	**34**	.326	8.28	-.106	-2.69	**57**	-.220	-5.59	-.106	-2.69
12	.326	8.28	-.290	-7.37	**35**	.273	6.93	-.198	-5.03	**58**	.220	-5.59	.000	0.00
13	.251	6.38	-.365	-9.27	**36**	.198	5.03	-.273	-6.93	**59**	-.220	-5.59	.106	2.69
14	.159	4.04	-.418	-10.62	**37**	.106	2.69	-.326	-8.28	**60**	-.145	-3.68	.181	4.60
15	.053	1.35	-.418	-10.62	**38**	.000	0.00	-.326	-8.28	**61**	-.053	-1.35	.128	3.25
16	-.053	-1.35	-.418	-10.62	**39**	-.106	-2.69	-.326	-8.28	**62**	.053	1.35	.128	3.25
17	-.159	-4.04	-.418	-10.62	**40**	-.198	-5.03	-.273	-6.93	**63**	.128	3.25	.053	1.35
18	-.251	-6.38	-.365	-9.27	**41**	-.273	-6.93	-.198	-5.03	**64**	.128	3.25	-.053	-1.35
19	-.326	-8.28	-.290	-7.37	**42**	-.326	-8.28	-.106	-2.69	**65**	.053	1.35	-.128	-3.25
20	-.379	-9.63	-.198	-5.03	**43**	-.326	-8.28	.000	0.00	**66**	-.053	-1.35	-.128	-3.25
21	-.432	-10.97	-.106	-2.69	**44**	-.326	-8.28	.106	2.69	**67**	-.128	-3.25	-.053	-1.35
22	-.432	-10.97	.000	0.00	**45**	-.273	-6.93	.198	5.03	**68**	-.128	-3.25	.053	1.35
23	-.432	-10.97	.106	2.69	**46**	-.198	-5.03	.273	6.93	**69**	.000	0.00	.000	0.00

Dimensions in Inches (millimeters) are subject to change without notice.

© 2013 Glenair, Inc.
U.S. CAGE Code 06324
Printed in U.S.A.

Series 800 Mighty Mouse
Straight PCB Footprints

Component Mounting Side of PCB

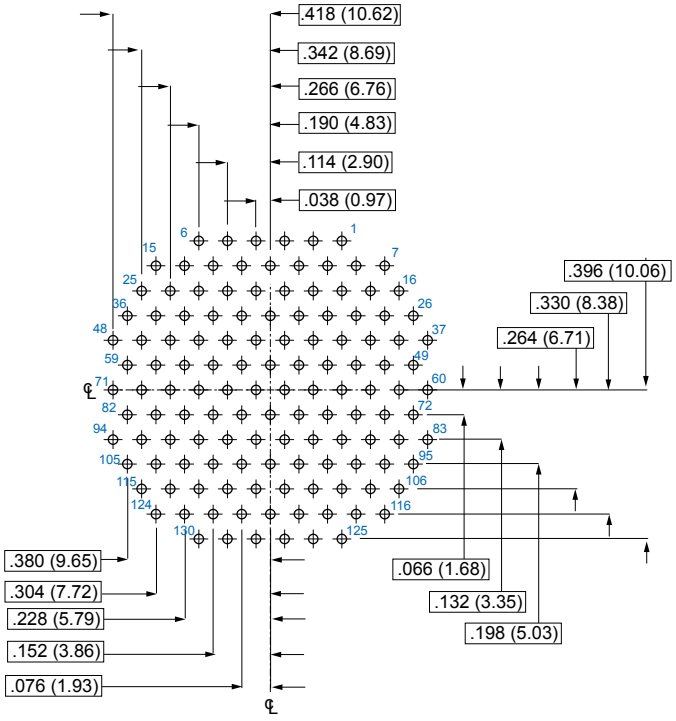

Pin Connector

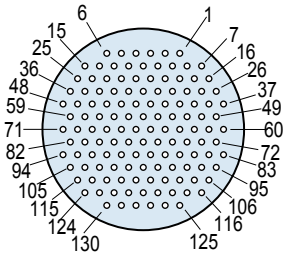

Insert Arrangement
21-130, 23-130
130 #23 Contacts
.022 (0.56) Max. Dia. Tail

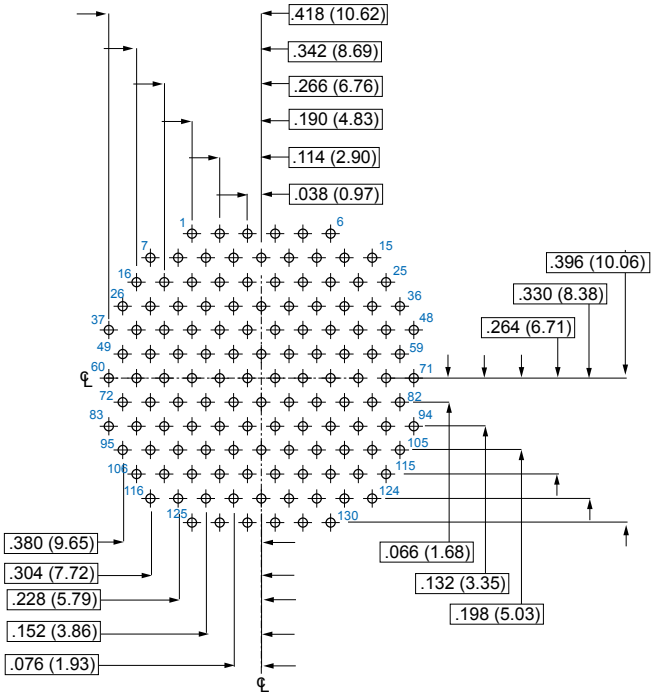

Socket Connector

Dimensions in Inches (millimeters) are subject to change without notice.

© 2013 Glenair, Inc. U.S. CAGE Code 06324 Printed in U.S.A.

Flange Gaskets for Series 800 Mighty Mouse Receptacles

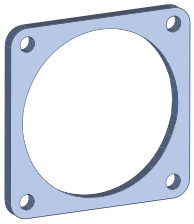

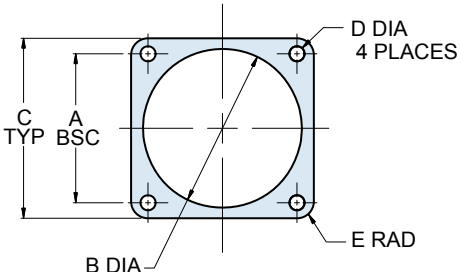

These flange gaskets provide sealing between square flange receptacles and the mounting panel. Choose fluorosilicone, Viton®, or conductive fluorosilicone material (Chomerics 1298 silver-filled). Gaskets are .032" (0.8) thick.

Shell Size	Part Number			Dimensions									
				A Bsc.		B Dia.		C Typ.		D Dia.		E Rad.	
	Fluorosilicone	Viton®	Conductive Fluorosilicone	In.	mm.	In.	mm.	In.	mm.	In.	mm.	In.	mm.
5	809-108F01	809-108V01	809-108X01	.363	9.22	.342	8.69	.527	13.39	.093	2.36	.078	1.98
6	809-108F02	809-108V02	809-108X02	.423	10.74	.405	10.29	.588	14.94	.093	2.36	.078	1.98
7	809-108F03	809-108V03	809-108X03	.483	12.27	.467	11.86	.650	16.51	.125	3.18	.078	1.98
8	809-108F04	809-108V04	809-108X04	.542	13.77	.530	13.46	.709	18.01	.125	3.18	.078	1.98
9	809-108F05	809-108V05	809-108X05	.719	18.26	.593	15.06	.938	23.83	.125	3.18	.105	2.67
10	809-108F06	809-108V06	809-108X06	.719	18.26	.655	16.64	.938	23.83	.125	3.18	.105	2.67
12	809-108F07	809-108V07	809-108X07	.812	20.62	.780	19.81	1.031	26.19	.125	3.18	.105	2.67

Flange Gaskets for Series 801 Mighty Mouse Receptacles

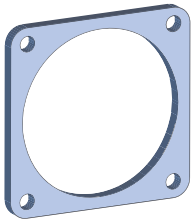

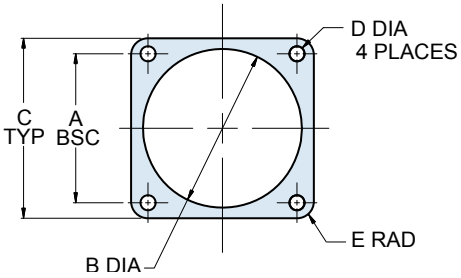

These flange gaskets provide sealing between square flange receptacles and the mounting panel. Choose fluorosilicone, Viton®, or conductive fluorosilicone material (Chomerics 1298 silver-filled). Gaskets are .032" (0.8) thick.

Shell Size	Part Number			Dimensions									
				A Bsc.		B Dia.		C Typ.		D Dia.		E Rad.	
	Fluorosilicone	Viton®	Conductive Fluorosilicone	In.	mm.	In.	mm.	In.	mm.	In.	mm.	In.	mm.
5	809-108F11	809-108V11	809-108X11	.363	9.22	.342	8.69	.530	13.46	.093	2.36	.078	1.98
6	809-108F12	809-108V12	809-108X12	.423	10.74	.405	10.29	.590	14.99	.093	2.36	.078	1.98
7	809-108F13	809-108V13	809-108X13	.483	12.27	.467	11.86	.650	16.51	.093	2.36	.078	1.98
8	809-108F14	809-108V14	809-108X14	.545	13.84	.530	13.46	.712	18.08	.093	2.36	.078	1.98
9	809-108F16	809-108V16	809-108X16	.607	15.42	.560	14.22	.850	21.59	.125	3.18	.105	2.67
10	809-108F15	809-108V15	809-108X15	.670	17.02	.655	16.64	.890	22.61	.125	3.18	.105	2.67
13	809-108F17	809-108V17	809-108X17	.812	20.62	.842	21.39	1.030	26.16	.125	3.18	.105	2.67
16	809-108F18	809-108V18	809-108X18	.607	15.42	1.030	26.16	1.219	30.96	.125	3.18	.105	2.67
17	809-108F19	809-108V19	809-108X19	.812	20.62	1.092	27.74	1.280	32.51	.125	3.18	.105	2.67
21	809-108F43	809-108V43	809-108X43	1.322	33.58	1.332	33.83	1.570	39.88	.125	3.18	.105	2.67

Dimensions in Inches (millimeters) are subject to change without notice.

© 2013 Glenair, Inc.
U.S. CAGE Code 06324
Printed in U.S.A.

Flange Gaskets for Series 802 Mighty Mouse Receptacles

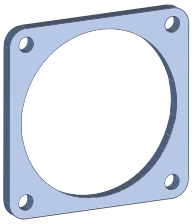

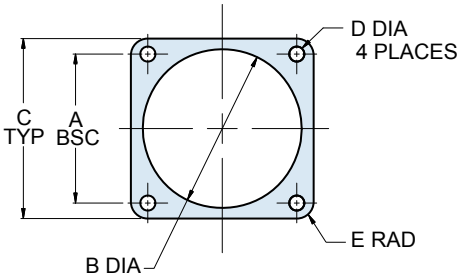

These flange gaskets provide sealing between square flange receptacles and the mounting panel. Choose fluorosilicone, Viton, or neoprene material. Gaskets are .032" (0.8) thick.

Shell Size	Part Number			Dimensions									
				A Bsc.		B Dia.		C Typ.		D Dia.		E Rad.	
	Fluorosilicone	Viton®	Neoprene	In.	mm.	In.	mm.	In.	mm.	In.	mm.	In.	mm.
5	809-108F51	809-108V51	809-108N51	.500	12.70	.448	11.38	.885	22.48	.125	3.18	.105	2.67
6	809-108F52	809-108V52	809-108N52	.625	15.88	.572	14.53	1.010	25.65	.125	3.18	.105	2.67
7	809-108F53	809-108V53	809-108N53	.688	17.48	.635	16.13	1.072	27.23	.125	3.18	.105	2.67
8	809-108F54	809-108V54	809-108N54	.750	19.05	.698	17.73	1.135	28.83	.125	3.18	.105	2.67
9	809-108F55	809-108V55	809-108N55	.812	20.62	.760	19.30	1.195	30.35	.125	3.18	.105	2.67
10	809-108F56	809-108V56	809-108N56	.875	22.23	.822	20.88	1.260	32.00	.125	3.18	.105	2.67
12	809-108F57	809-108V57	809-108N57	.938	23.83	.885	22.48	1.323	33.60	.125	3.18	.105	2.67
14	809-108F58	809-108V58	809-108N58	1.125	28.58	1.072	27.23	1.510	38.35	.125	3.18	.105	2.67
15	809-108F59	809-108V59	809-108N59	1.188	30.18	1.135	28.83	1.573	39.95	.125	3.18	.105	2.67
21	809-108F60	809-108V60	809-108N60	1.375	34.93	1.448	36.78	1.760	44.70	.125	3.18	.105	2.67

Flange Gaskets for Series 803 Mighty Mouse Receptacles

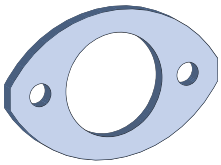

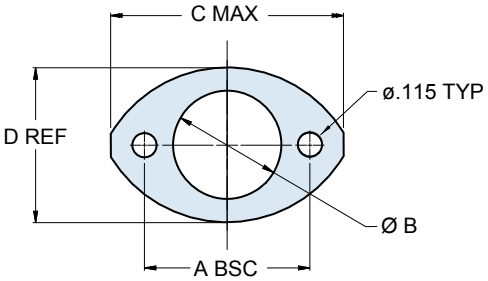

These flange gaskets provide sealing between elliptical flange receptacles and the mounting panel. Choose fluorosilicone, Viton®, or conductive fluorosilicone material (Chomerics 1298 silver-filled). Gaskets are .032" (0.8) thick.

Shell Size	Part Number			Dimensions							
				A Bsc.		B Dia.		C Max.		D Ref.	
	Fluorosilicone	Viton®	Conductive Fluorosilicone	In.	mm.	In.	mm.	In.	mm.	In.	mm.
5	809-108F31	809-108V31	809-108X31	.513	13.03	.345	8.00	.710	18.03	.460	11.68
6	809-108F32	809-108V32	809-108X32	.598	15.19	.405	10.29	.795	20.19	.522	13.26
7	809-108F33	809-108V33	809-108X33	.708	17.98	.475	12.07	.900	22.86	.590	14.99
8	809-108F34	809-108V34	809-108X34	.964	24.51	.545	13.84	1.160	29.46	.670	17.02
9	809-108F35	809-108V35	809-108X35	1.017	25.83	.605	15.37	1.215	30.86	.721	18.31
10	809-108F36	809-108V36	809-108X36	1.101	37.97	.682	17.32	1.295	32.89	.795	20.19
12	809-108F37	809-108V37	809-108X37	1.204	30.58	.757	19.23	1.400	35.56	.874	22.20
14	809-108F38	809-108V38	809-108X38	1.280	32.51	.910	23.11	1.555	39.50	1.050	26.67
15	809-108F39	809-108V39	809-108X39	1.370	34.80	.970	24.64	1.640	41.66	1.150	29.21

Dimensions in Inches (millimeters) are subject to change without notice.

© 2013 Glenair, Inc. U.S. CAGE Code 06324 Printed in U.S.A.

Flange Gaskets for Series 805 Mighty Mouse Receptacles

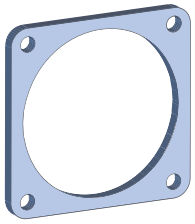

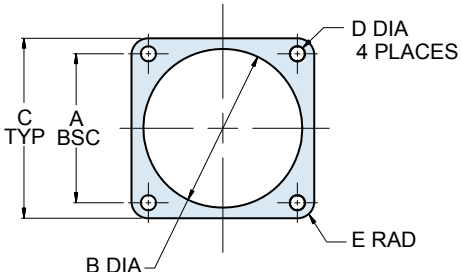

These flange gaskets provide sealing between square flange receptacles and the mounting panel. Choose fluorosilicone, Viton®, or conductive fluorosilicone material (Chomerics 1298 silver-filled). Gaskets are .032" (0.8) thick.

Shell Size	Part Number			Dimensions									
	Fluorosilicone	Viton®	Conductive Fluorosilicone	A Bsc.		B Dia.		C Typ.		D Dia.		E Rad.	
				In.	mm.	In.	mm.	In.	mm.	In.	mm.	In.	mm.
8	809-108F20	809-108V20	809-108X20	.660	16.76	.530	13.46	.850	21.59	.093	2.36	.078	1.98
9	809-108F21	809-108V21	809-108X21	.723	18.36	.590	14.99	.913	23.19	.093	2.36	.078	1.98
10	809-108F22	809-108V22	809-108X22	.785	19.94	.660	16.76	.975	24.77	.093	2.36	.078	1.98
11	809-108F23	809-108V23	809-108X23	.848	21.54	.720	18.29	1.039	26.39	.093	2.36	.078	1.98
12	809-108F24	809-108V24	809-108X24	.909	23.09	.780	19.81	1.099	27.91	.093	2.36	.078	1.98
15	809-108F25	809-108V25	809-108X25	1.058	26.87	.970	24.64	1.288	32.72	.125	3.18	.105	2.67
18	809-108F26	809-108V26	809-108X26	1.255	31.88	1.160	29.46	1.475	37.47	.125	3.18	.105	2.67
19	809-108F27	809-108V27	809-108X27	1.327	33.71	1.220	30.99	1.537	39.04	.125	3.18	.105	2.67
23	809-108F28	809-108V28	809-108X28	1.570	39.88	1.458	37.03	1.797	45.64	.125	3.18	.105	2.67

Dimensions in Inches (millimeters) are subject to change without notice.

© 2013 Glenair, Inc.

U.S. CAGE Code 06324

Printed in U.S.A.

Series 80 Mighty Mouse Technical Reference
Recommended Torque Values

SERIES 800 RECOMMENDED TORQUE VALUES

Shell Size Series 800	Coupling Torque				Jam Nut Tightening				Backshell Tightening			
	In-Lbs.		N-m		In-Lbs.		N-m		In-Lbs.		N-m	
	Min.	Max.	Min.	Max.	Min.	Max.	Min.	Max.	Min.	Max.	Min.	Max.
5	13	17	1.5	1.9	20	25	2.2	2.8	13	17	1.5	1.9
6	18	22	2.0	2.5	20	25	2.2	2.8	18	22	2.0	2.5
7	20	25	2.3	2.8	20	25	2.2	2.8	30	40	3.4	4.5
8	30	40	3.4	4.5	20	25	2.2	2.8	30	40	3.4	4.5
9	30	40	3.4	4.5	25	30	2.8	3.3	35	45	4.0	5.1
10	35	45	4.0	5.1	25	30	2.8	3.3	35	45	4.0	5.1
12	35	45	4.0	5.1	25	30	2.8	3.3	35	45	4.0	5.1

SERIES 801, 802, 803, 804, 805 RECOMMENDED TORQUE VALUES

Shell Size Series 801, 802, 803, 804	Shell Size Series 805	Coupling Torque				Jam Nut Tightening				Backshell Tightening			
		In-Lbs.		N-m		In-Lbs.		N-m		In-Lbs.		N-m	
		Min.	Max.	Min.	Max.	Min.	Max.	Min.	Max.	Min.	Max.	Min.	Max.
5	**-**	25	35	2.8	4.0	20	25	2.2	2.8	13	17	1.5	1.9
6	**8**	35	40	4.0	4.5	20	25	2.2	2.8	18	22	2.0	2.5
7	**9**	35	40	4.0	4.5	20	25	2.2	2.8	30	40	3.4	4.5
8	**10**	40	50	4.5	5.7	20	25	2.2	2.8	30	40	3.4	4.5
9	**11**	40	50	4.5	5.7	20	25	2.2	2.8	35	45	4.0	5.1
10	**12**	50	60	5.7	6.8	25	30	2.8	3.3	35	45	4.0	5.1
12, 13	**15**	50	60	5.7	6.8	25	30	2.8	3.3	35	45	4.0	5.1
14, 16	**18**	55	65	6.2	7.3	25	30	2.8	3.3	35	45	4.0	5.1
15, 17	**19**	55	65	6.2	7.3	25	30	2.8	3.3	35	45	4.0	5.1
21	**23**	55	65	6.2	7.3	25	30	2.8	3.3	35	45	4.0	5.1

Dimensions in Inches (millimeters) are subject to change without notice.

© 2013 Glenair, Inc.

Glenair Hermetic Connector Products
Space Grade Mod Codes

What is outgassing?

Plastic and rubber materials give off gaseous molecules. For example, the smell inside a new car is caused by polymer outgassing. Heat and vacuum increase the rate of diffusion. In a spacecraft the gases coming off polymers can contaminate optical surfaces and instruments. The result is degraded performance.

How is outgassing measured?

The space industry has adopted a standardized test procedure, ***ASTM E 595***, to evaluate out-gassing properties of polymers. Small samples of material are heated to 125° C. at a vacuum of 5 X 10^{-5} torr for 24 hours. Then the sample is weighed to calculate the ***Total Mass Loss*** (TML). The TML cannot exceed 1.00% of the total initial mass. During the test, outgassed matter condenses on a cooled collector plate. The quantity of outgassed matter is caluclated to determine the ***Collected Volatile Condensable Material*** (CVCM). The CVCM cannot exceed 0.10% of the original specimen mass.

What is NASA screening?

NASA specification EEE-INST-002 provides instructions on selecting, screening and qualifying parts for use on NASA GSFC space flight projects.

What screening level is required?

NASA defines three levels of screening: level 1 for highest reliability, level 2 for high reliability, and level 3 for standard reliability. Level 3 equates to standard lot acceptance inspection. Levels 1 and 2 call for additional testing.

HOW TO ORDER SPACE GRADE CONNECTORS

Step 1: Find a Standard Part Number

Electroless nickel plated shells are preferred for space flight. Cadmium plating is prohibited.

Step 2: Select a NASA Screening Level

The term "Screening Level" refers to the final inspection procedure.

Level 1 for mission-critical highest reliability
Level 2 for high reliability
Level 3 for standard reliability

Step 3: Choose Outgassing Processing

A detailed explanation of outgassing is on the following pages. The fluorosilicone rubber seals commonly used on aerospace-grade connectors such as MIL-DTL-38999 and Series 79 connectors, along with certain bonding agents and inks, do not meet NASA outgassing requirements unless the connector is specially processed. Glenair outgassing tests have shown oven baking or thermal vacuum outgassing processing are sufficient to reduce outgassing levels to NASA standards. Oven baking is more economical than thermal vacuum outgassing.

Step 4: Select the Mod 429 Code that Matches the Desired Level of Screening and Outgassing

Use the following table to choose the right modification code. Add the mod code to the connector part number. Example: 790-024PC-13ML-***429C***

NASA SCREENING LEVELS AND MODIFICATION CODES

NASA Screening Level	Special Screening Only	Special Screening Plus Outgassing Processing	
		8 Hour Oven Bake 400° F.	Thermal Vacuum Outgassing 24 hrs. 125° C.
Level 1 Highest Reliability	Mod 429B	Mod 429J	Mod 429C
Level 2 High Reliability	Mod 429	Mod 429K	Mod 429A
Level 3 Standard Reliability	(Use standard part number)	Mod 186	Mod 186M

Dimensions in Inches (millimeters) are subject to change without notice.

© 2013 Glenair, Inc.
U.S. CAGE Code 06324
Printed in U.S.A.

800-013
Series 80 Mighty Mouse Hermetic Receptacles
with UN Mating Thread How to Order Information



Series 800 Hermetic

Series 800 Hermetic Receptacles feature 304L stainless steel shells, fused vitreous glass insulators and Alloy 52 iron alloy contacts.

1 X 10^{-7} cc/second maximum helium leak rate.

Three Shell Styles: solder mount, jam nut or square flange.

Solder Cup Contacts for wire attachment, or ***PC Tail Contacts*** for attachment to flexible or rigid circuits.

HOW TO ORDER

Sample Part Number

800-013	-07	Z1	7-10	P	Z
Series	**Shell Style**	**Shell Material / Finish**	**Shell Size- Insert Arrangement**	**Contact Type**	**Shell Key Position**
800-013 Hermetic Receptacle	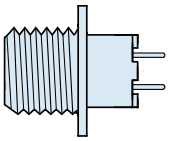 **-02** Square Flange 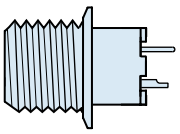 **-03** Solder Mount 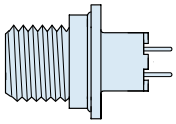 **-07** Jam Nut	**Z1** Stainless Steel / Passivated **ZL** Stainless Steel / Nickel Plated *Titanium and Inconel® shell materials are available. Consult factory for ordering information.	See Page C-4 for Contact Arrangements	**P** Pin, Solder Cup **C** Pin, PC Tail **S** Socket, Solder Cup **D** Sockets, PC Tail	**N** Normal **X** Pos. X **Y** Pos. Y **Z** Pos. Z

Dimensions in Inches (millimeters) are subject to change without notice.

© 2013 Glenair, Inc.

SERIES 800 RECOMMENDED TORQUE VALUES

Shell Size	Coupling Torque				Jam Nut				Backshell			
	In-Lbs.		N-m		In-Lbs.		N-m		In-Lbs.		N-m	
	Min.	Max.	Min.	Max.	Min.	Max.	Min.	Max.	Min.	Max.	Min.	Max.
5	13	17	1.5	1.9	20	25	2.2	2.8	13	17	1.5	1.9
6	18	22	2.0	2.5	20	25	2.2	2.8	18	22	2.0	2.5
7	20	25	2.3	2.8	20	25	2.2	2.8	30	40	3.4	4.5
8	30	40	3.4	4.5	20	25	2.2	2.8	30	40	3.4	4.5
9	30	40	3.4	4.5	25	30	2.8	3.3	35	45	4.0	5.1
10	35	45	4.0	5.1	25	30	2.8	3.3	35	45	4.0	5.1
12	35	45	4.0	5.1	25	30	2.8	3.3	35	45	4.0	5.1

HERMETIC LEAK RATE MOD CODES

Designator	Required Leak Rate
–585A	1 x 10^{-10} cc Helium per second
–585B	1 x 10^{-9} cc Helium per second
–585C	1 x 10^{-8} cc Helium per second

SERIES 800 PANEL CUTOUTS

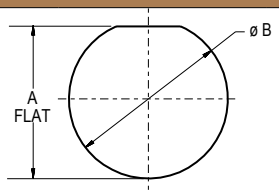

Shell Size	A Flat		øB	
	In.	mm.	In.	mm.
5	.302 / .298	7.67/ 7.57	.318	8.08
6	.365 / .361	9.27/ 9.17	.386	9.80
7	.424 / .420	10.77/ 10.67	.449	11.40
8	.486/ .482	12.34/ 12.24	.510	12.95
9	.543/ .539	13.79/ 13.69	.574	14.58
10	.617/ .613	15.67/ 15.57	.635	16.12
12	.725/ .721	18.42/ 18.31	.760	19.30

Dimensions in Inches (millimeters) are subject to change without notice.

© 2013 Glenair, Inc.
U.S. CAGE Code 06324
Printed in U.S.A.

800-013-02 and 800-013-03
Series 800 Mighty Mouse Hermetic Receptacles
Square Flange Mount with UN Mating Thread
Connector Dimensions

800-013-02 Square Flange Dimensions

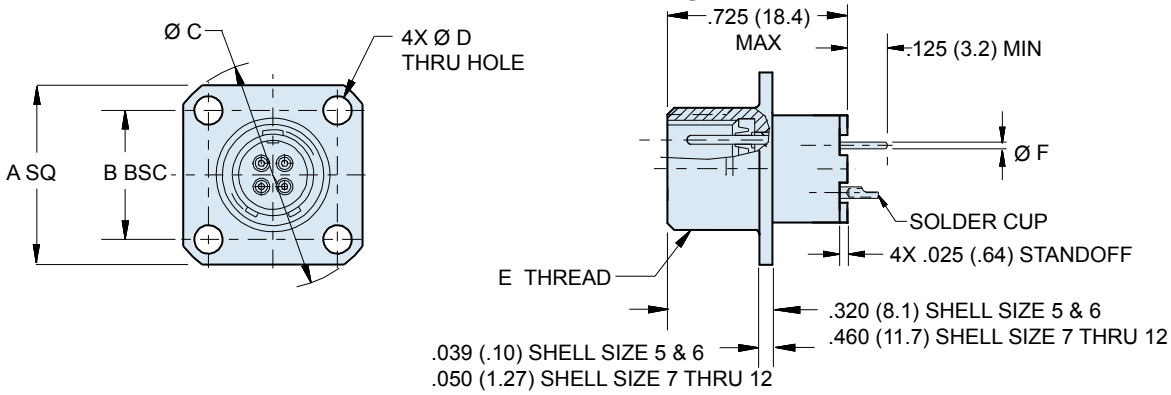

800-013-02 SQUARE FLANGE HERMETIC RECEPTACLE DIMENSIONS										
Shell Size	A SQ		B BSC		Ø C		Ø D		E Threads Mating	Ø F PC TAIL DIA. ± .002 (0.05)
	In.	mm.	In.	mm.	In.	mm.	In. ± .005	mm. ± 0.13		
5	.527	13.39	.363	9.22	.680	17.27	.094	2.39	.3125-28 UN-2A	Size #23 .020 (0.51)
6	.588	14.92	.423	10.74	.750	19.05			.5000-32 UN-2A	
7	.650	16.51	.483	12.27	.830	21.08	.096	2.44	.4375-28 UNEF-2A	Size #20 .026 (0.66)
8	.710	18.03	.542	13.77	.938	23.83	.091	2.31	.5000-32 UN-2A	
9	.938	23.83	.719	18.26	1.250	31.75	.130	3.30	.5625-32 UN-2A	Size #16 .062 (1.57)
10	.938	23.83	.719	18.26	1.250	31.75			.6250-32 UN-2A	Size #12 .094 (2.34)
12	1.031	26.19	.812	20.62	1.375	34.93			.7500-28 UN-2A	

800-013-03 Solder Mount Dimensions

Shell Size 5 and 6

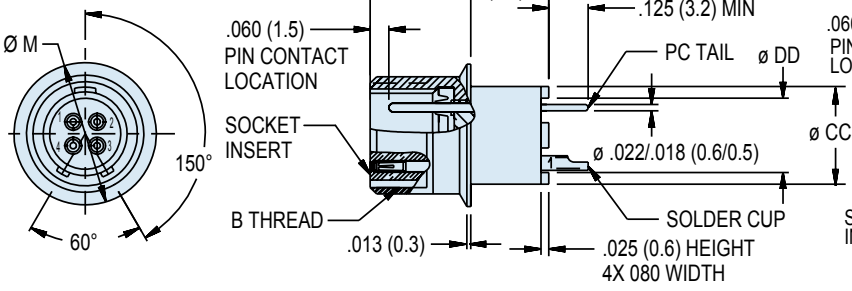

Shell Size 7 thru 12

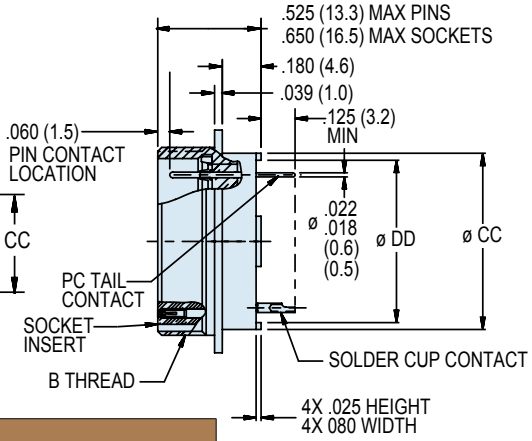

DIMENSIONS				
Shell Size	Ø A		B Threads	Ø C PC TAIL DIA. ± .002 (0.05)
	In.	mm.		
5	.400	10.16	.3125-28 UN-2A	Size #22 .020 (0.51)
6	.455	11.56	.3750-28 UN-2A	
7	.520	13.21	.4375-28 UNEF-2A	Size #20 .026 (0.66)
8	.650	16.51	.5000-32 UN-2A	
9	.764	19.41	.5625-32 UN-2A	Size #16 .062 (1.57)
10	.775	19.69	.6250-32 UN-2A	Size #12 .094 (2.34)
12	.858	21.79	.7500-28 UN-2A	

© 2013 Glenair, Inc.
U.S. CAGE Code 06324
Printed in U.S.A.

800-013-07
Series 800 Mighty Mouse Hermetic Receptacles
Jam Nut Mount with UN Mating Thread
Hermetic Connector Dimensions

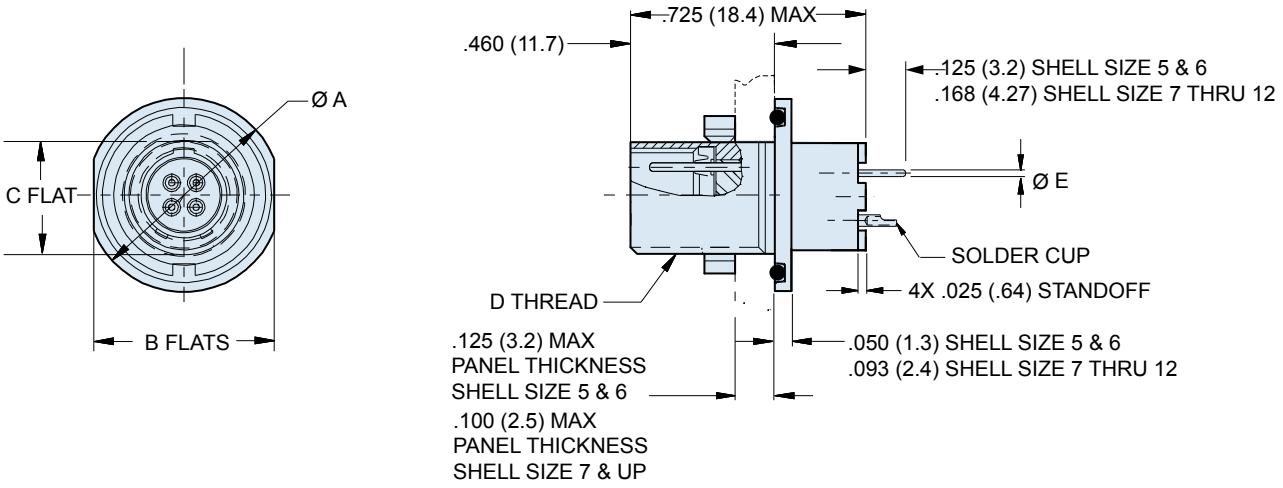

DIMENSIONS

Shell Size	Ø A		B FLATS		C		D Threads Mating	Ø E PC TAIL DIA. ± .002 (0.05)
	In.	mm.	In.	mm.	In.	mm.		
5	.541	13.74	.500	12.70	.285	7.24	.3125-28 UN-2A	**Size #23** .020 (0.51) **Size #20** .026 (0.66) **Size #16** .062 (1.57) **Size #12** .094 (2.34)
6	.610	15.49	.562	14.27	.352	8.94	.3750-28 UN-2A	
7	.670	17.02	.635	16.13	.411	10.44	.4375-28 UNEF-2A	
8	.775	19.69	.735	18.67	.473	12.01	.5000-32 UN-2A	
9	.875	22.23	.806	20.47	.530	13.46	.5625-32 UN-2A	
10	.980	24.89	.940	23.88	.604	15.34	.6250-32 UN-2A	
12	1.062	26.97	.986	25.04	.712	18.08	.7500-28 UN-2A	

SERIES 800 KEY POSITIONS

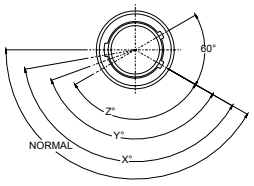

Plug

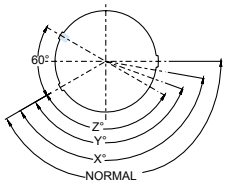

Receptacle

Key Position	Key Rotation
Normal (N)	150°
X	140°
Y	130°
Z	120°

Shell size 5 and 6: master key is located at top dead center for normal (N) position. Shell size 7 thru 12: master key is rotated 90° from TDC.

SERIES 800 PANEL CUTOUTS

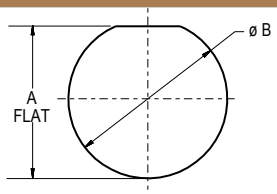

Shell Size	A Flat		øB	
	In.	mm.	In.	mm.
5	.302 / .298	7.67/ 7.57	.318	8.08
6	.365 / .361	9.27/9.17	.386	9.80
7	.424 / .420	10.77/ 10.67	.449	11.40
8	.486/ .482	12.34/ 12.24	.510	12.95
9	.543/ .539	13.79/ 13.69	.574	14.58
10	.617/.613	15.67/ 15.57	.635	16.12
12	.725/.721	18.42/ 18.31	.760	19.30

Dimensions in Inches (millimeters) are subject to change without notice.

© 2013 Glenair, Inc.
U.S. CAGE Code 06324
Printed in U.S.A.

801-012
Series 801 Mighty Mouse Hermetic Receptacle
Double-Start ACME Threads How to Order Information



Series 801 Solder Mount Hermetic

Series 801 Hermetic Receptacles feature 304L stainless steel shells, fused vitreous glass insulators and Alloy 52 iron alloy contacts.

1 X 10^{-7} cc/second maximum helium leak rate.

Three Shell Styles: solder mount, jam nut or square flange.

Solder Cup Contacts or ***PC Tail Contacts*** for attachment to flexible or rigid circuits or rigid boards.

HOW TO ORDER

Sample Part Number

801-012	-03	Z1	7-10	P	A
Series	**Shell Style**	**Shell Material / Finish**	**Shell Size/Insert Arrangement**	**Contact Type**	**Shell Key Position**
801-012 Hermetic Receptacles with Printed Circuit Board Contacts or Solder Cup Contacts	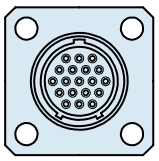 **-02** **Square Flange** 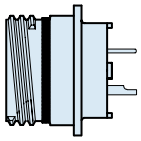 **-03** **Solder Mount** 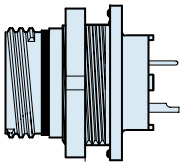 **-07** **Jam Nut** 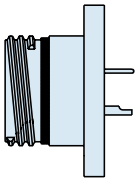 **-013** **Weld Mount**	**Z1** Stainless Steel / Passivated **ZL** Stainless Steel / Nickel Plated *Titanium and Inconel® shell materials are available. Consult factory for ordering information.	See Page C-4 for Contact Arrangements	**P** Pin, Solder Cup **C** Pin, PC Tail **S** Socket, Solder Cup **D** Sockets, PC Tail	**A** Normal **B** Pos. B **C** Pos. C **D** Pos. D **E** Pos. E **F** Pos. F 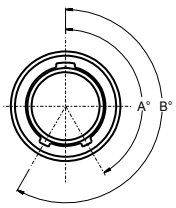

	A°	B°
A	150°	210°
B	75°	210°
C	95°	230°
D	140°	275°
E	75°	275°
F	95°	210°

Dimensions in Inches (millimeters) are subject to change without notice.

© 2013 Glenair, Inc.
U.S. CAGE Code 06324
Printed in U.S.A.

801-012-02
Series 801 Mighty Mouse Hermetic Receptacles
Double-Start ACME Threads • Square Flange
Connector Dimensions

HERMETIC LEAK RATE MOD CODES	
Designator	**Required Leak Rate**
–585A	1 x 10^{-10} cc Helium per second
–585B	1 x 10^{-9} cc Helium per second
–585C	1 x 10^{-8} cc Helium per second

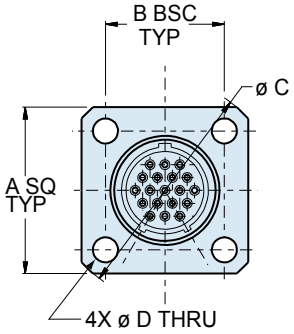

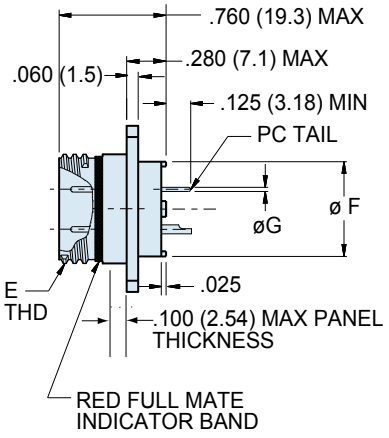

DIMENSIONS

Shell Size	A		B BSC		Ø C		Ø D		E Thread	Ø F		Ø G Tail Dia
	In.	mm.	In.	mm.	In.	mm.	In. ±.003	mm. ± 0.08		In.	mm.	
5	.530	13.46	.363	9.22	.680	17.27	.093	2.36	.3125-.05P-.1L-2A	.244	6.20	**#23** .018/.022 (0.46/0.56)
6	.590	14.99	.423	10.74	.750	19.05	.093	2.36	.375-.05P-1L-2A	.330	8.38	
7	.650	16.51	.483	12.27	.850	21.59	.093	2.36	.4375-.05P-1L2A	.432	10.97	
8	.712	18.08	.545	13.84	.938	23.83	.093	2.36	.5000-.05P-1L2A	.493	12.52	**#16** .060/.064 (1.52/1.63)
9	.850	21.59	.607	15.42	1.125	28.58	.128	3.25	.5625-.05P-.1L-2A	.551	14.00	
10	.890	22.61	.670	17.02	1.188	30.18	.128	3.25	.6250-.05P-1L2A	.620	15.75	
13	1.030	26.16	.812	20.62	1.375	34.93	.128	3.25	.8125-.1P-.2L-2A	.703	17.86	
16	1.219	31.96	.981	24.92	1.625	41.28	.128	3.25	1.000-.1P-.2L-2A	.863	21.92	**#12** .092/.096 (2.34/2.44)
17	1.280	32.51	1.060	26.92	1.700	43.18	.128	3.25	1.062-.1P-.2L-2A	.912	23.16	
21	1.430	36.32	1.205	30.61	1.938	49.23	.128	3.25	1.3125-.1P-.2L-2A	1.170	29.72	

SERIES 801 PANEL CUTOUT

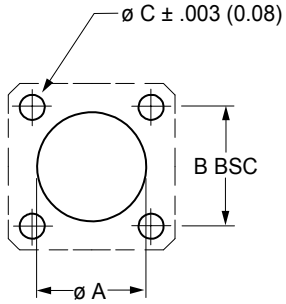

Shell Size	Ø A		Ø B		Ø C	
	In	mm.	In	mm.	In	mm.
5	.330	8.38	.363	9.22	.093	2.36
6	.390	9.91	.423	10.74	.093	2.36
7	.450	11.43	.483	12.27	.093	2.36
8	.510	12.95	.545	13.84	.093	2.36
9	.575	14.61	.607	15.42	.128	3.25
10	.640	16.26	.670	17.02	.128	3.25
13	.825	20.96	.812	20.65	.128	3.25
16	1.015	25.78	.981	24.92	.128	3.25
17	1.075	27.31	1.060	26.92	.128	3.25
21	1.325	33.66	1.205	30.61	.128	3.25

KEY POSITIONS

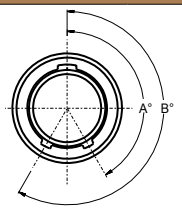

	A°	B°
A	150°	210°
B	75°	210°
C	95°	230°
D	140°	275°
E	75°	275°
F	95°	210°

Dimensions in Inches (millimeters) are subject to change without notice.

© 2013 Glenair, Inc.
U.S. CAGE Code 06324
Printed in U.S.A.

801-012-03
Series 801 Mighty Mouse Hermetic Receptacles
Double-Start ACME Threads • Solder Mount
Connector Dimensions

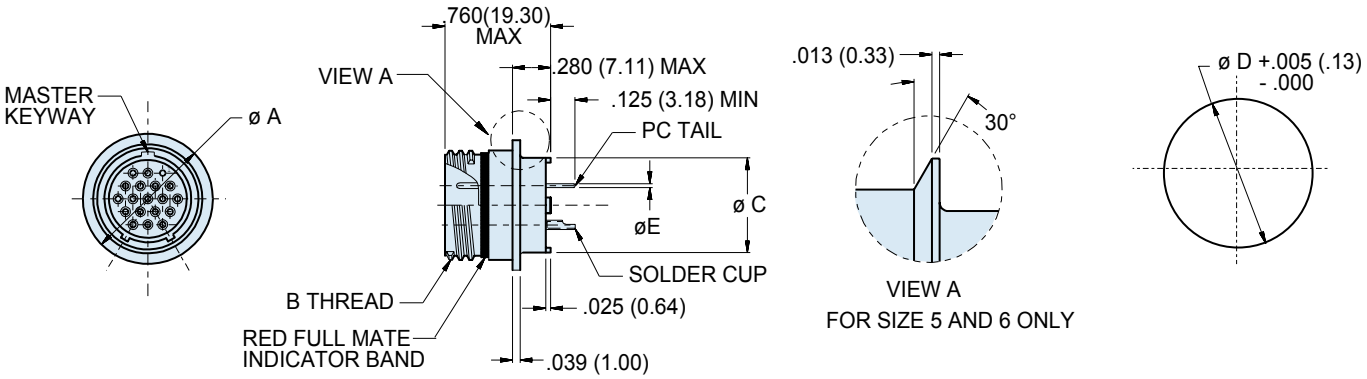

Solder Mount Hermetic
801-012-03

DIMENSIONS

Shell Size	Ø A		B Thread	Ø C		Ø D Panel Cutout		Ø E Tail Dia.
	In.	mm.		In.	mm.	In.	mm.	
5	.395	10.03	.3125-.05P-.1L-2A	.244	6.20	.319	8.10	**#23** .018/.022 (0.46/0.56)
6	.455	11.56	.375-.05P-.1L-2A	.330	8.38	.376	9.55	
7	.520	13.21	.4375-.05P-1L-2A	.432	11.97	.438	11.13	
8	.580	14.73	.5000-.05P-1L-2A	.493	12.52	.438	11.13	**#20** .024/.028 (0.61/0.71)
9	.645	16.38	.5625-.05P-.1L-2A	.551	14.00	.563	14.30	
10	.705	18.01	.6250-.05P-1L-2A	.620	15.75	.438	11.13	**#16** .060/.064 (1.52/1.63)
13	.895	22.73	.8125-.1P-.2L-2A	.703	17.86	.814	20.68	
16	1.080	27.43	1.000-.1P-.2L-2A	.863	21.92	1.007	25.58	**#12** .092/.096 (2.34/2.44
17	1.145	29.08	1.062-.1P-.2L-2A	.912	23.16	1.067	27.10	
21	1.395	35.43	1.3125-.1P-.2L-2A	1.170	29.72	1.320	33.53	

KEY POSITIONS

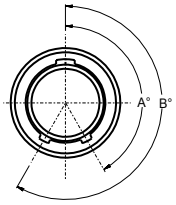

	A°	B°
A	150°	210°
B	75°	210°
C	95°	230°
D	140°	275°
E	75°	275°
F	95°	210°

Dimensions in Inches (millimeters) are subject to change without notice.

© 2013 Glenair, Inc.
U.S. CAGE Code 06324
Printed in U.S.A.

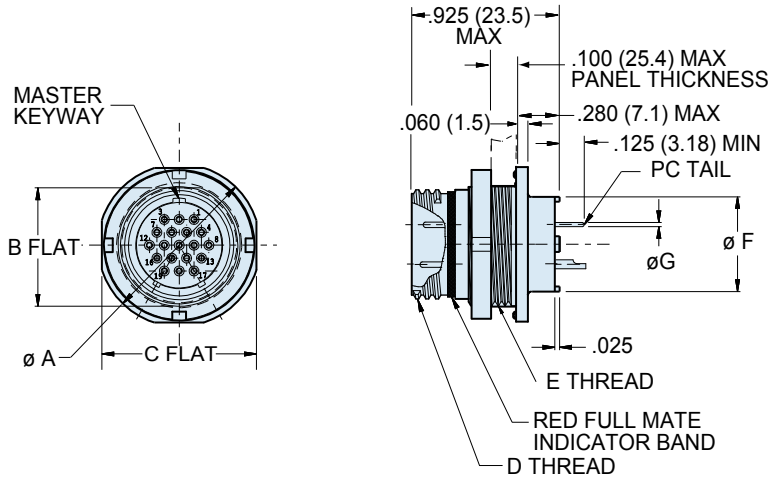

DIMENSIONS

Shell Size	Ø A		B Flat		C Flat		D Thread	E Thread UN-2A	Ø F		Ø G Tail Dia.
	In.	mm.	In.	mm.	In.	mm.			In.	mm.	
5	.575	14.61	.350	8.89	.545	13.84	.3125-.05P-.1L-2A	.375-28	.244	6.20	#23 .018/.022 (0.46/0.56)
6	.635	16.13	.410	10.41	.595	15.11	.375-.05P-.1L-2A	.4375-28	.330	8.38	
7	.755	19.18	.536	13.61	.723	18.36	.4375-.05P-1L2A	.5625-32	.432	10.97	
8	.755	19.18	.536	13.61	.723	18.36	.5000-.05P-1L-2A	.5625-32	.493	12.52	#20 .024/.028 (0.61/0.71)
9	.830	21.08	.596	15.14	.790	20.07	.5625-.05P-.1L-2A	.625-28	.551	14.00	
10	.890	22.61	.658	16.71	.855	21.72	.6250-.05P-1L-2A	.6875-28	.620	15.75	#16 .060/.064 (1.52/1.63)
13	1.078	27.38	.845	21.46	1.044	26.52	.8125-.1P-.2L-2a	.875-28	.703	17.86	
16	1.264	32.11	1.022	25.96	1.230	31.24	1.000-.1P-.2L-2A	1.0625-20	.863	21.92	#12 .092/.096 (2.34/2.44
17	1.325	33.66	1.096	27.84	1.290	32.77	1.062-.1P-.2L-2A	1.125-28	.912	23.16	
21	1.625	41.28	1.345	34.16	1.577	40.06	1.3125-.1P-.2L-2A	1.375-28	1.170	29.72	

KEY POSITIONS

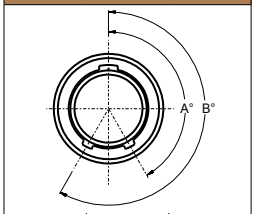

	A°	B°
A	150°	210°
B	75°	210°
C	95°	230°
D	140°	275°
E	75°	275°
F	95°	210°

SERIES 801 JAM NUT PANEL CUTOUT

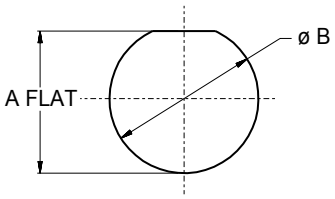

Shell Size	A Flat In. ± .002	A Flat mm. ± 0.05	Ø B In.	Ø B mm.
5	.360	9.14	.385	9.78
6	.420	10.67	.448	11.37
7	.551	14.00	.573	14.55
8	.551	14.00	.573	14.55
9	.609	15.47	.635	16.13
10	.671	17.04	.698	17.73
13	.859	21.82	.885	22.48
16	1.038	26.37	1.075	27.31
17	1.111	28.22	1.135	28.83
21	1.354	34.39	1.385	35.18

Dimensions in Inches (millimeters) are subject to change without notice.

© 2013 Glenair, Inc.
U.S. CAGE Code 06324
Printed in U.S.A.

801-012-013
Series 801 Mighty Mouse Hermetic Receptacle
with Double-Start ACME Threads • Weld Mount
Connector Dimensions

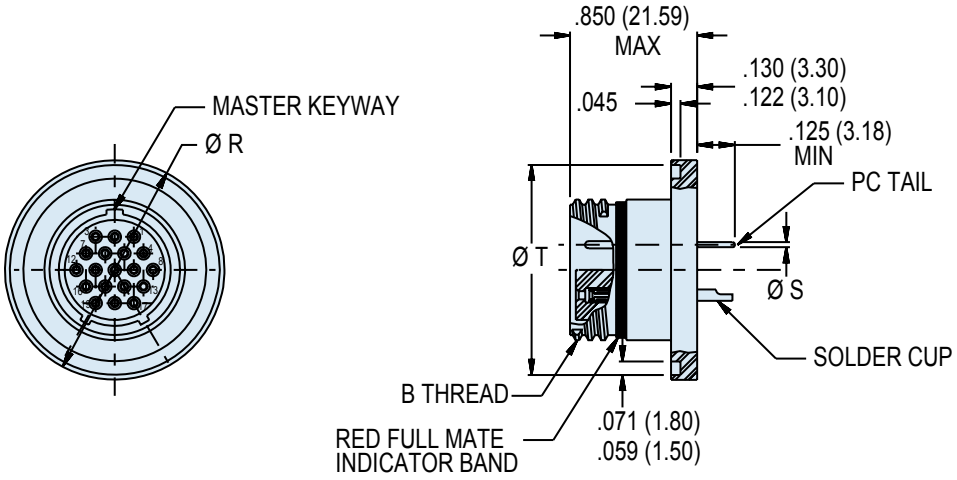

DIMENSIONS					
Shell Size	Ø R		Ø T		Ø S Tail Dia.
	In.	mm.	In.	mm.	
5	.600	15.24	.555	14.10	#23 .018/.022 (0.46/0.56)
6	.665	16.89	.620	15.75	
7	.730	18.54	.685	17.40	#20 .024/.028 (0.61/0.71)
8	.788	20.02	.745	18.92	
9	.912	23.16	.869	22.07	
10	.975	24.77	.933	23.70	#16 .060/.064 (1.52/1.63)
13	1.162	29.51	1.119	28.42	
16	1.288	32.72	1.245	31.62	#12 .092/.096 (2.34/2.44
17	1.360	34.54	1.315	33.40	
21	1.625	41.28	1.580	40.13	

KEY POSITIONS

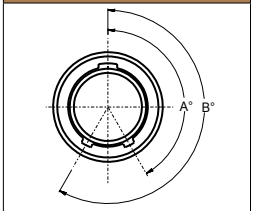

	A°	B°
A	150°	210°
B	75°	210°
C	95°	230°
D	140°	275°
E	75°	275°
F	95°	210°

SERIES 801 JAM NUT PANEL CUTOUT

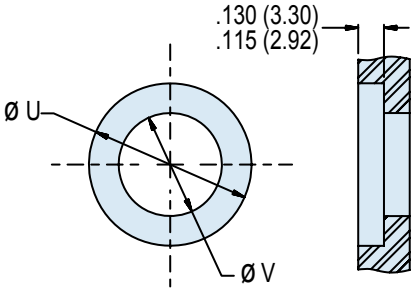

Shell Size	Ø U In. ± .002	Ø U mm. ± 0.05	Ø V Min In.	Ø V Min mm.
5	.606	15.39	.180	4.57
6	.671	17.04	.240	6.10
7	.736	18.69	.330	8.38
8	.794	20.17	.390	9.91
9	.918	23.32	.455	11.56
10	.981	24.92	.520	13.21
13	1.168	29.67	.610	15.49
16	1.294	32.87	.775	19.69
17	1.366	34.70	.825	20.96
21	1.631	41.43	1.080	27.43

Dimensions in Inches (millimeters) are subject to change without notice.

© 2013 Glenair, Inc.
U.S. CAGE Code 06324
Printed in U.S.A.



Series 801 Hermetic Receptacles feature 304L stainless steel shells, fused vitreous glass insulators and Alloy 52 iron alloy contacts.

1 X 10^{-7} cc/second maximum helium leak rate.

Three Shell Styles: solder mount, jam nut or square flange.

Cable Adapters with Crimp Rings provided with each connector for reliable cable termination.

Series 801 Solder Mount Hermetic

HOW TO ORDER

Sample Part Number

801-059	-03	Z1	16-5	P	A	-02
Series	**Shell Style**	**Shell Material / Finish**	**Shell Size/Insert Arrangement**	**Contact Type**	**Shell Key Position**	**Cable Attachment**
801-059 Hermetic Receptacle, Quick Coupling, Co-Ax Pins	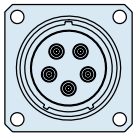 **-02** **Square Flange** 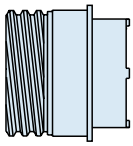 **-03** **Solder Mount** 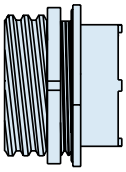 **-07** **Jam Nut Rear Mount Only**	**Z1** Stainless Steel / Passivated **ZB** Stainless Steel / Olive Drab Chromate over Cadmium **ZC** Stainless Steel / Zinc Cobalt Alloy/Black Chromate **ZL** Stainless Steel / Nickel Plated *Titanium and Inconel® shell materials are available. Consult factory for ordering information.	See Page C-4 for Contact Arrangements	**P** Co-Ax Pin	**A** Normal **B** Pos. B **C** Pos. C **D** Pos. D **E** Pos. E **F** Pos. F 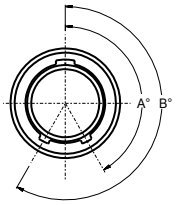 **A°** / **B°** **A** 150° / 210° **B** 75° / 210° **C** 95° / 230° **D** 140° / 275° **E** 75° / 275° **F** 95° / 210°	**Cables Accommodated:** **-01** M17/113-RG316 **-02** M17/152-00001 (RG316DS) **-03** M17/93-RG178 **-04** RG-178 Double Shield per DSCC 06017 **-05** M17/94-RG179 **Note:** Each connector is supplied with sufficient cable adapters and crimp rings to terminate appropriate cable for insertion into contact rear. After cable is terminated and adapter inserted into contact rear, the rear of the connector must be potted to cover adapters.

Dimensions in Inches (millimeters) are subject to change without notice.

© 2013 Glenair, Inc.

U.S. CAGE Code 06324

Printed in U.S.A.

801-059-02
Series 801 Mighty Mouse Hermetic Receptacle
Quick Coupling • Square Flange • Co-Ax Pins
Connector Dimensions

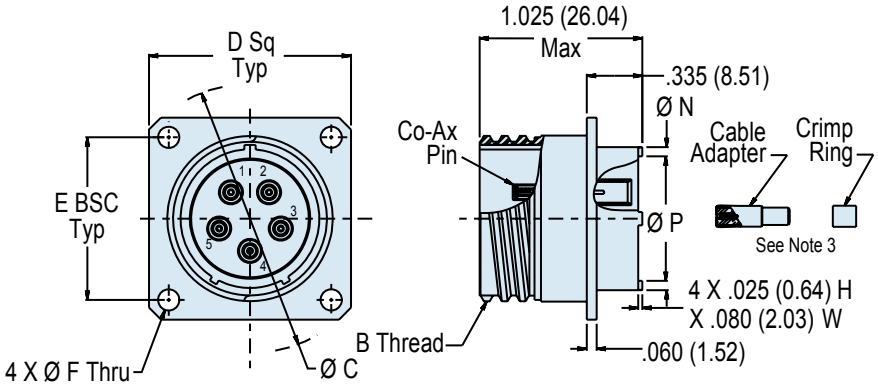

Square Flange Panel Mount Hermetic
801-059-02

DIMENSIONS

Shell Size	B Thread	Ø C		D Sq		Ø N		Ø P	
		In.	mm.	In. ±.003	mm. ± 0.08	In.	mm.	In.	mm.
6	.3750-.05P-.1L-2A	.750	19.05	.590	14.99	.330	8.38	.236	6.20
7	.4375-.05P-.1L-2A	.850	21.59	.650	16.51	.432	10.97	.324	8.38
8	.5000-.05P-.1L-2A	.938	23.83	.712	18.08	.493	12.52	.390	10.97
9	.5625-.05P-.1L-2A	1.125	28.56	.850	21.59	.551	14.00	.444	12.52
10	.6250-.05P-.1L-2A	1.188	30.18	.890	22.61	.620	15.75	.520	14.00
11	.6875-.05P-.1L-2A	1.250	31.75	.935	23.75	.662	16.81	.557	15.75
13	.8125-.1P-.2L-2A	1.375	34.93	1.030	26.16	.703	17.86	.596	17.86
16	1.0000-.1P-.2L-2A	1.625	41.28	1.219	30.96	.863	21.92	.756	21.92
17	1.0625-.1P-.2L-2A	1.700	43.18	1.280	32.51	.912	23.16	.805	23.16
19	1.8750-.1P-.2L-2A	1.900	48.26	1.432	36.37	1.018	25.86	.910	29.72
21	1.3125-.1P-.2L-2A	2.100	53.34	1.565	39.75	1.170	29.72	1.061	26.95

SERIES 801 PANEL CUTOUT

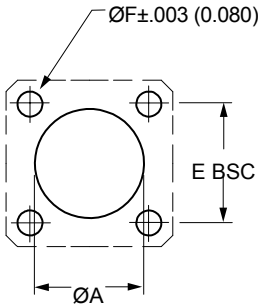

Shell Size	Ø A		E BSC		Ø F	
	In	mm.	In	mm.	In	mm.
6	.455	11.56	.423	9.22	.096 .091	2.44 2.31
7	.520	13.21	.483	12.27		
8	.580	14.73	.545	13.84		
9	.645	16.38	.607	15.42	.130 .126	3.30 3.20
10	.705	17.91	.670	17.02		
11	.770	19.56	.715	18.16		
13	.895	22.73	.812	20.62		
16	1.080	27.43	.981	24.92		
17	1.145	29.08	1.060	26.92		
19	1.283	32.59	1.191	30.25		
21	1.415	35.94	1.322	33.58		

KEY POSITIONS

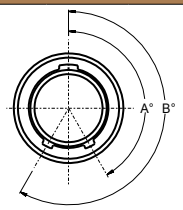

	A°	B°
A	150°	210°
B	75°	210°
C	95°	230°
D	140°	275°
E	75°	275°
F	95°	210°

Dimensions in Inches (millimeters) are subject to change without notice.

© 2013 Glenair, Inc.
U.S. CAGE Code 06324
Printed in U.S.A.

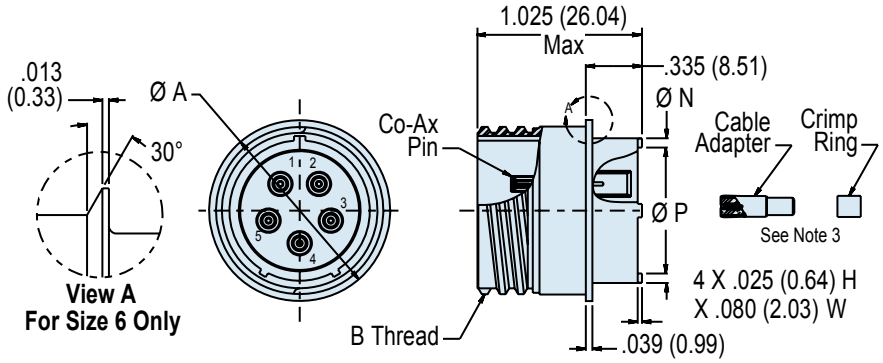

Solder Mount Hermetic
801-059-03

DIMENSIONS							
Shell Size	Ø A		B Thread	Ø N		Ø M Panel Cutout	
	In.	mm.		In.	mm.	In.	mm.
6	.455	11.56	.3750-.05P-.1L-2A	.330	8.38	.448	11.38
7	.520	13.21	.4375-.05P-.1L-2A	.432	10.97	.573	14.55
8	.580	14.73	.5000-.05P-.1L-2A	.493	12.52	.573	14.55
9	.645	16.38	.5625-.05P-.1L-2A	.551	14.00	.635	16.13
10	.705	17.91	.6250-.05P-.1L-2A	.620	15.75	.698	17.73
11	.770	19.56	.6875-.05P-.1L-2A	.662	16.81	.760	19.30
13	.895	22.73	.8125-.1P-.2L-2A	.703	17.86	.885	22.48
16	1.080	29.08	1.0000-.1P-.2L-2A	.863	21.92	1.075	27.31
17	1.145	29.08	1.0625-.1P-.2L-2A	.912	23.16	1.135	28.83
19	1.283	32.59	1.8750-.1P-.2L-2A	1.018	25.86	1.260	32.00
21	1.415	35.94	1.3125-.1P-.2L-2A	1.170	29.72	1.385	68.83

KEY POSITIONS

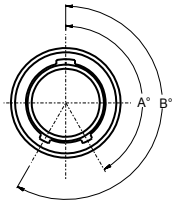

	A°	B°
A	150°	210°
B	75°	210°
C	95°	230°
D	140°	275°
E	75°	275°
F	95°	210°

Dimensions in Inches (millimeters) are subject to change without notice.

© 2013 Glenair, Inc.
U.S. CAGE Code 06324
Printed in U.S.A.

801-059-07
Series 801 Mighty Mouse Hermetic Receptacle
Quick Coupling, Jam Nut Mount with Co-Ax Pins

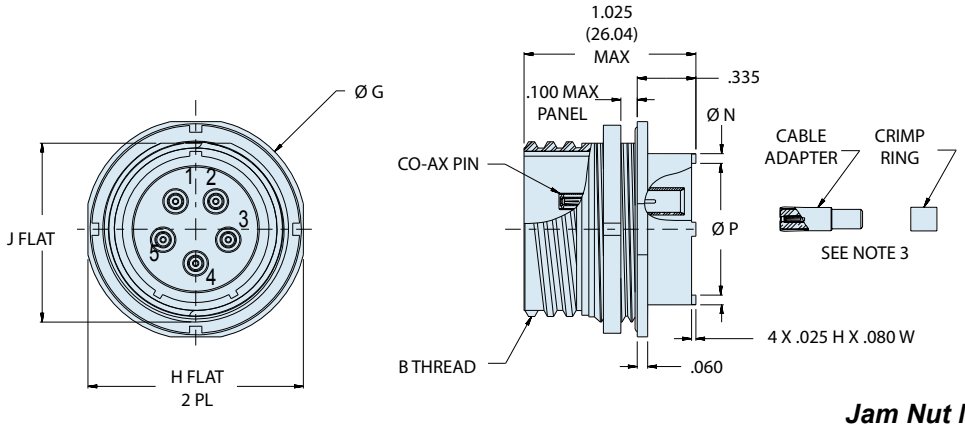

Jam Nut Mount Hermetic
801-059-07

DIMENSIONS

Shell Size	Ø A		J Flat		H Flat		B Thread	K Thread	Ø N		ØP	
	In.	mm.	In.	mm.	In.	mm.			In.	mm.	In.	mm.
6	.455	11.56	.410	10.41	.595	15.11	.3750-.05P-.1L-2A	.4375-28 UNEF-2A	.330	8.38	.236	5.99
7	.520	13.21	.536	13.61	.723	18.36	.4375-.05P-.1L-2A	.5625-32 UN-2A	.432	10.97	.324	8.23
8	.580	14.73	.536	13.61	.723	18.36	.5000-.05P-.1L-2A	.5625-32 UN-2A	.493	12.52	.390	9.91
9	.645	16.38	.596	15.14	.790	20.07	.5625-.05P-.1L-2A	.6250-28 UN-2A	.551	14.00	.444	11.28
10	.705	17.91	.658	16.71	.855	21.72	.6250-.05P-.1L-2A	.6875-28 UN-2A	.620	15.75	.520	13.21
11	.770	19.56	.718	18.24	.925	23.50	.6875-.05P-.1L-2A	.7500-28 UN-2A	.662	16.81	.557	14.15
13	.895	22.73	.845	21.46	1.044	26.52	.8125-.1P-.2L-2A	.8750-28 UN-2A	.703	17.86	.596	15.14
16	1.080	27.43	1.022	25.96	1.230	31.24	1.0000-.1P-.2L-2A	1.0625-20 UN-2A	.863	21.92	.756	19.20
17	1.145	29.08	1.096	27.84	1.290	32.77	1.0625-.1P-.2L-2A	1.1250-28 UN-2A	.912	23.16	.805	20.45
19	1.283	32.59	1.225	31.12	1.415	35.94	1.8750-.1P-.2L-2A	1.2500-28 UN-2A	1.018	25.86	.910	23.11
21	1.415	35.94	1.346	34.19	1.577	40.06	1.3125-.1P-.2L-2A	1.3750-28 UN-2A	1.170	29.72	1.061	26.95

KEY POSITIONS

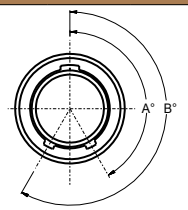

	A°	B°
A	150°	210°
B	75°	210°
C	95°	230°
D	140°	275°
E	75°	275°
F	95°	210°

SERIES 801 JAM NUT PANEL CUTOUT

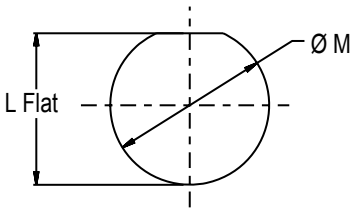

Recommended Panel Cutout Shell Style -07

Shell Size	L Flat In. ± .002	L Flat mm. ± 0.05	Ø M In.	Ø M mm.
6	.418/.414	10.62/10.52	.448	11.38
7	.544/.540	13.82/13.72	.573	14.55
8	.544/.540	13.82/13.72	.573	14.55
9	.604/.600	15.34/15.24	.635	16.13
10	.668/.664	16.97/16.87	.698	17.73
11	.728/.724	18.49/18.39	.760	19.30
13	.853/.849	21.67/21.56	.885	22.48
16	1.030/1.026	26.16/26.06	1.075	27.31
17	1.104/1.100	28.04/27.94	1.135	28.83
19	1.235/1.231	31.37/31.27	1.260	32.00
21	1.353/1.349	34.37/34.26	1.385	68.83

Dimensions in Inches (millimeters) are subject to change without notice.

© 2013 Glenair, Inc.
U.S. CAGE Code 06324
Printed in U.S.A.



Style 00 Front Mount

Series 802 Hermetic Receptacles feature gold plated iron alloy contacts and compression glass dielectric material. The 316L stainless steel connector shell provides excellent corrosion protection and is suitable for e-beam welding . The Viton® interfacial seal and piston o-ring offer improved resistance to harsh chemicals.

1 x 10^{-7} cc/Second Maximum Helium Leak Rate. Open face (unmated) pressure rating is 1000 PSI. When mated, Series 802 connectors withstand 3500 PSI hydrostatic pressure.

HERMETIC LEAK RATE MOD CODES	
Designator	**Required Leak Rate**
–585A	1 x 10^{-10} cc Helium per second
–585B	1 x 10^{-9} cc Helium per second
–585C	1 x 10^{-8} cc Helium per second

HOW TO ORDER SERIES 802 HERMETIC RECEPTACLES

Sample Part Number

802-013	-00	Z1	6-7	P	A
Series	**Shell Style**	**Shell Material / Finish**	**Shell Size- Insert Arrangement**	**Contact Type**	**Shell Key Position**
802-013 Series 802 Hermetic Receptacle with Solder Cup or PCB Contacts	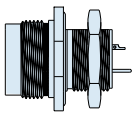 **-00** Jam Nut for Front Panel Mounting 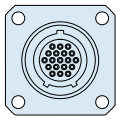 **-02** Square Flange Mount 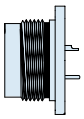 **-03** Weld Mount 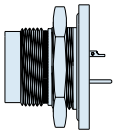 **-07** Jam Nut for Rear Panel Mounting	**Z1** Stainless Steel / Passivated **ZL** Stainless Steel / Nickel Plated *Titanium and Inconel® shell materials are available. Consult factory for ordering information.	See Page C-4 for Contact Arrangements	**E** Pin, Solder Cup **P** Pin, PC Tail **S** Socket, Solder Cup **D** Sockets, PC Tail	**A** Normal **B** Pos. B **C** Pos. C **D** Pos. D

Dimensions in Inches (millimeters) are subject to change without notice.

© 2013 Glenair, Inc. U.S. CAGE Code 06324 Printed in U.S.A.

802-013-00
Series 802 "Aqua Mouse" Submersible
Hermetic Front Mount Jam Nut Receptacle
Connector Dimensions

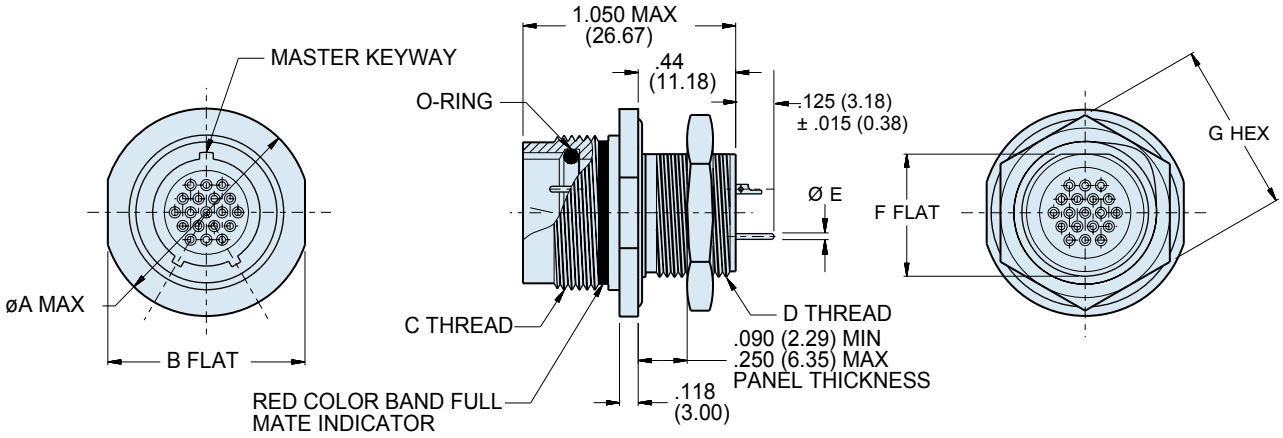

SHELL STYLE 00
FRONT MOUNT JAM NUT

DIMENSIONS

Shell Size	A Max.		B Flat		C	D	Ø E	F Flat		G Hex	
	In.	mm.	In.	mm.	Mating Threads	Threads	Tail Dia.	In.	mm.	In.	mm.
5	.720	18.29	.625	15.88	.438-28 UNEF-2A	.312-28 UN-2A	**#23** .018/.022 (0.46/0.56)	.281	7.14	.500	12.70
6	.780	19.81	.750	19.05	.562-20 UN-2A	.438-28 UN-2A		.344	8.74	.625	15.88
7	.910	23.11	.812	20.62	.625-20 UN-2A	.500-32 UN-2A		.469	11.91	.688	17.48
8	.960	24.38	.875	22.23	.687-20 UN-2A	.562-28 UN-2A	**#20** .024/.028 (0.61/0.71)	.531	13.49	.750	19.05
9	1.030	26.16	.937	23.80	.750-20 UNEF-2A	.625-20 UN-2A		.594	15.09	.812	20.62
10	1.090	27.69	1.000	25.40	.812-20 UNEF-2A	.687-28 UN-2A		.656	16.66	.875	22.23
12	1.160	29.46	1.062	26.97	.875-20 UNEF-2A	.750-28 UN-2A	**#16** .060/.064 (1.52/1.63)	.719	18.26	.938	23.83
14	1.340	34.04	1.250	31.75	1.062-20 UN-2A	.938-28 UN-2A		.893	22.68	1.125	28.58
15	1.410	35.18	1.312	33.32	1.125-20 UN-2A	1.000-28 UN-2A	**#12** .092/.096 (2.34/2.44)	.955	24.26	1.188	30.18
21	1.700	43.18	1.562	39.67	1.4375-20 UN-2A	1.312-28 UN-2A		1.257	31.93	1.500	38.10

SERIES 802 RECEPTACLE KEY POSITIONS

Key Position	Key Rotation A°	Key Rotation B°
Normal (A)	150°	210°
B	75°	210°
C	95°	230°
D	140°	275°
E	75°	275°
F	95°	210°

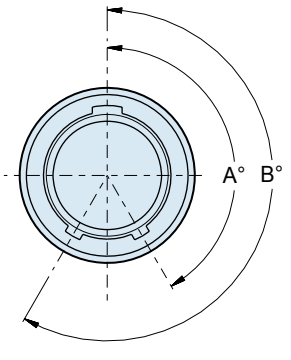

CUTOUT DIMENSIONS

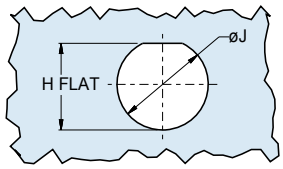

RECOMMENDED PANEL CUTOUT
FOR STYLE 00
FRONT MOUNT JAM NUT

Shell Size	H Flat		Ø J	
	In.	mm.	In.	mm.
5	**.291/.286**	**7.4/7.3**	.322	8.2
6	**.417/.412**	**10.6/10.5**	.448	11.4
7	**.479/.474**	**12.2/12.0**	.510	13.0
8	**.541/.536**	**13.7/13.6**	.572	14.5
9	**.604/.599**	**15.3/15.2**	.635	16.1
10	**.666/.661**	**16.9/16.8**	.697	17.7
12	**.729/.724**	**18.5/18.4**	.760	19.3
14	**.903/.898**	**22.9/22.8**	.948	24.1
15	**.965/.960**	**24.5/24.4**	1.010	25.7
21	**1.267/1.263**	**32.2/32.1**	1.322	33.6

Dimensions in Inches (millimeters) are subject to change without notice.

© 2013 Glenair, Inc.
U.S. CAGE Code 06324
Printed in U.S.A.

802-013-02
Series 802 "Aqua Mouse" Submersible
Square Flange Mount Hermetic Receptacle
Connector Dimensions

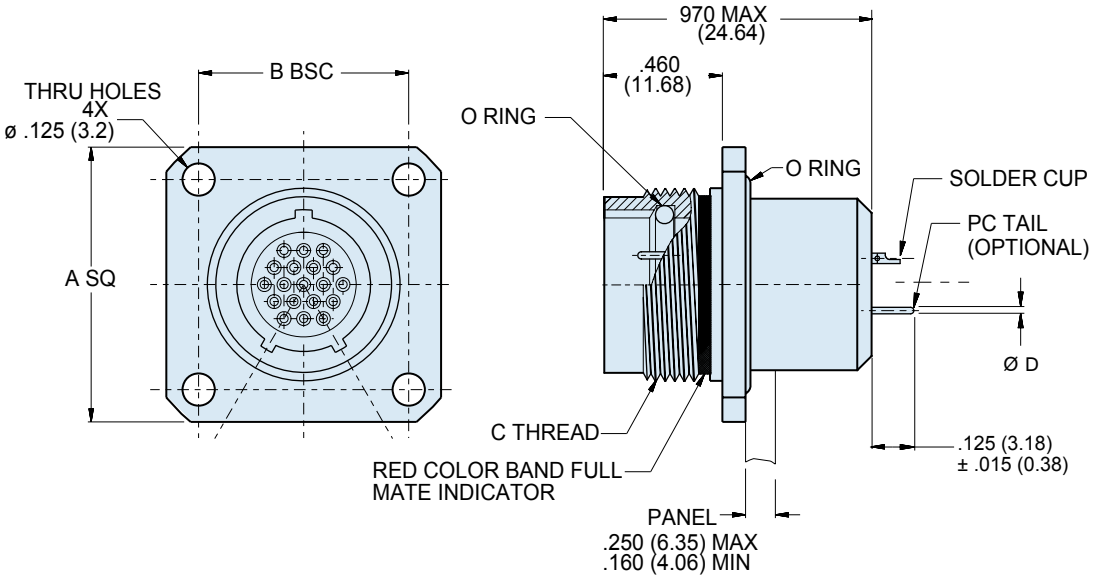

DIMENSIONS

Shell Size	A Square In.	A Square mm.	B BSC. In.	B BSC. mm.	C Mating Threads	Ø D Tail Dia.	Ø E In.	Ø E mm.
5	.885	22.48	.500	12.70	.438-28 UNEF	**#23** .018/.022 (0.46/0.56)	.327	8.31
6	1.010	25.65	.625	15.88	.562-20 UN		.390	9.91
7	1.072	27.23	.688	17.48	.625-20 UN		.515	13.08
8	1.135	28.83	.750	19.05	.687-20 UN	**#20** .024/.028 (0.61/0.71)	.577	14.66
9	1.195	30.35	.812	20.62	.750-20 UNEF		.640	16.26
10	1.260	32.00	.875	22.23	.812-20 UNEF	**#16** .060/.064 (1.52/1.63)	.702	17.83
12	1.323	33.60	.938	23.83	.875-20 UNEF		.765	19.43
14	1.510	38.25	1.125	28.58	1.062-20 UN		.953	24.21
15	1.573	39.95	1.188	30.18	1.125-20 UN	**#12** .092/.096 (2.34/2.44)	1.015	25.78
21	1.750	44.45	1.375	34.93	1.4375-20 UN		1.312	33.32

SERIES 802 RECEPTACLE KEY POSITIONS

Key Position	Key Rotation A°	Key Rotation B°
Normal (A)	150°	210°
B	75°	210°
C	95°	230°
D	140°	275°
E	75°	275°
F	95°	210°

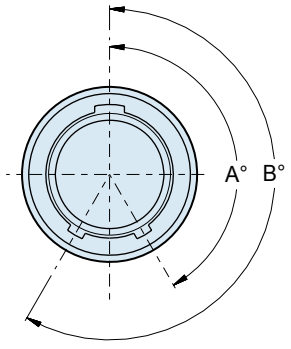

SERIES 802 SQ. FLANGE PANEL CUTOUT

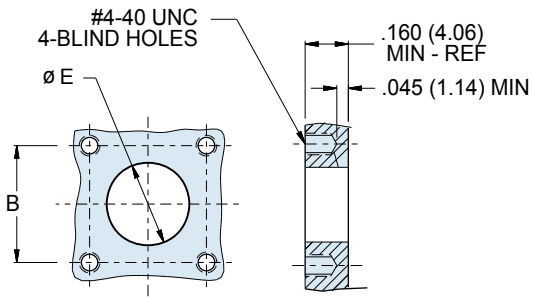

Dimensions in Inches (millimeters) are subject to change without notice.

© 2013 Glenair, Inc.
U.S. CAGE Code 06324
Printed in U.S.A.

802-013-03
Series 802 "Aqua Mouse" Submersible
Weld Mount Hermetic Receptacle
Connector Dimensions

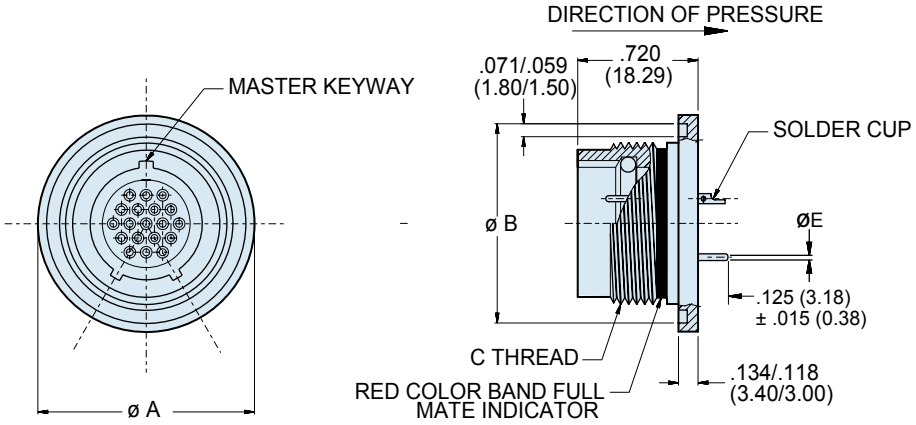

SHELL STYLE 03
WELD MOUNT

DIMENSIONS						
Shell Size	Ø A		Ø B		C Mating Threads	Ø E Tail Dia.
	In. ± .006	mm. ±0.15	In. ± .006	mm. ±0.15		
5	.788	20.02	.745	18.92	.438-28 UNEF	#23 .018/.022 (0.46/0.56)
6	.912	23.16	.869	22.07	.562-20 UN	
7	.975	24.77	.933	23.70	.625-20 UN	
8	1.038	26.37	.995	25.27	.687-20 UN	#20 .024/.028 (0.61/0.71)
9	1.100	27.94	1.057	26.85	.750-20 UNEF	
10	1.162	29.53	1.119	28.42	.812-20 UNEF	
12	1.225	31.12	1.182	30.02	.875-20 UNEF	#16 .060/.064 (1.52/1.63)
14	1.412	35.86	1.369	34.77	1.062-20 UN	
15	1.475	37.47	1.432	36.37	1.125-20 UN	#12 .092/.096 (2.34/2.44)
21	1.795	45.59	1.747	44.38	1.4375-20 UN	

SERIES 802 RECEPTACLE KEY POSITIONS			
Key Position	Key Rotation		
	A°	B°	
Normal (A)	150°	210°	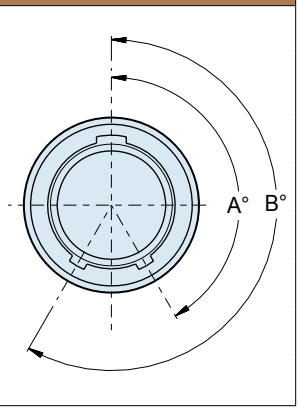
B	75°	210°	
C	95°	230°	
D	140°	275°	
E	75°	275°	
F	95°	210°	

Dimensions in Inches (millimeters) are subject to change without notice.

© 2013 Glenair, Inc.
U.S. CAGE Code 06324
Printed in U.S.A.

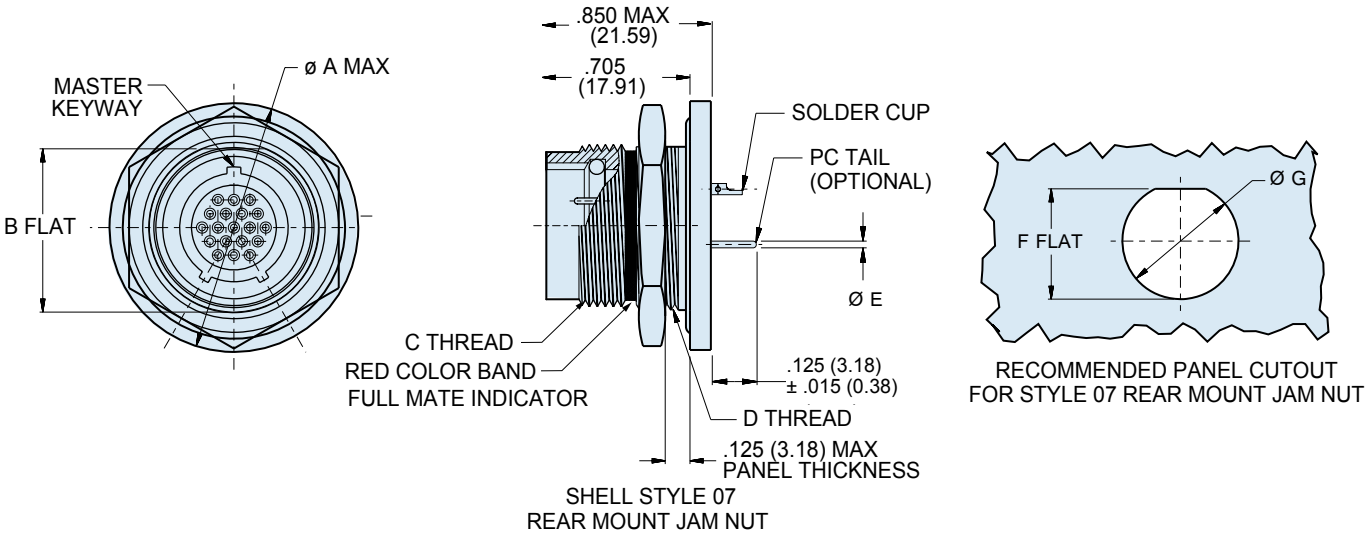

DIMENSIONS

Shell Size	Ø A Max. In.	Ø A Max. mm.	B Flat In. ± .003	B Flat mm. ±0.08	C Mating Threads	D Threads	Ø E Tail Dia.	F Flat In. ± .003	F Flat mm. ±0.08	Ø G In.	Ø G mm.
5	.885	22.48	.466	11.84	.438-28 UNEF	.500-32 UN-2A	#23 .018/.022 (0.46/0.56)	.473	12.01	.510	12.95
6	1.010	25.65	.591	15.01	.562-20 UN	.625-20 UN-2A		.603	15.32	.635	16.13
7	1.072	27.23	.653	16.59	.625-20 UN	.687-28 UN-2A		.662	16.81	.697	17.70
8	1.135	28.83	.727	18.47	.687-20 UN	.750-28 UN-2A	#20 .024/.028 (0.61/0.71)	.735	18.67	.760	19.30
9	1.195	30.35	.778	19.76	.750-20 UNEF	.812-28 UN-2A		.785	19.94	.822	20.88
10	1.260	32.00	.827	21.01	.812-20 UNEF	.875-28 UN-2A	#16 .060/.064 (1.52/1.63)	.835	21.21	.885	22.48
12	1.322	33.58	.890	22.61	.875-20 UNEF	.938-28 UN-2A		.899	22.83	.948	24.08
14	1.510	38.25	1.077	27.36	1.062-20 UN	1.125-28 UN-2A		1.085	27.56	1.135	28.83
15	1.572	39.93	1.140	28.96	1.125-20 UN	1.188-28 UN-2A	#12 .092/.096 (2.34/2.44)	1.155	29.34	1.198	30.43
21	1.940	49.28	1.464	37.19	1.4375-20 UN	1.500-28 UN-2A		1.473	37.41	1.510	39.12

SERIES 802 RECEPTACLE KEY POSITIONS

Key Position	Key Rotation A°	Key Rotation B°
Normal (A)	150°	210°
B	75°	210°
C	95°	230°
D	140°	275°
E	75°	275°
F	95°	210°

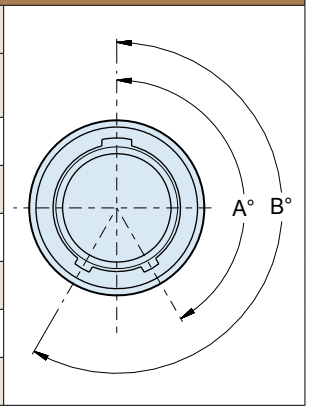

Dimensions in Inches (millimeters) are subject to change without notice.

© 2013 Glenair, Inc.
U.S. CAGE Code 06324
Printed in U.S.A.

802-040
Series 802 "Aqua Mouse" Submersible
Hermetic Receptacle How to Order Information
Sizes 12 and 16 Only



802-040-00 Front Mount

Series 802 Hermetic Receptacles feature 316L stainless steel shells, fused vitreous glass insulators and Alloy 52 iron alloy contacts.

1 X 10^{-7} cc/second maximum helium leak rate.

Four Shell Styles: front mount jam nut, front panel square flange mount, weld mount and rear panel jam nut mount.

Cable Adapters with Crimp Rings provided with each connector for reliable cable termination.

HOW TO ORDER

Sample Part Number

802-040	-07	Z1	12-3	P	A	-210
Series	**Shell Style**	**Shell Material / Finish**	**Shell Size/Insert Arrangement**	**Contact Type**	**Shell Key Position**	**Cable Style**
802-040 Hermetic Receptacle, Co-Ax Contacts, Sizes 12 and 16 Only	**-00** **Front Mount Jam Nut** **-02** **Front Panel Square Flange Mount** **-03** **Weld Mount** **-07** **Rear Panel Jam Nut Mount**	**Z1** Stainless Steel / Passivated **ZL** Stainless Steel / Nickel Plated Titanium and Inconel® shell materials are available. Consult factory for ordering information.	See Page C-4 for Contact Arrangements	**P** Co-Ax Pin **S** Co-Ax Socket	**A** Normal **B** Pos. B **C** Pos. C **D** Pos. D **E** Pos. E **F** Pos. F	Specify BIN Code per AS39029/27, /28, /76 and /78 **Note:** Each connector is supplied with sufficient cable adapters and crimp rings to terminate appropriate cable for insertion into contact rear. After cable is terminated and adapter inserted into contact rear, the rear of the connector must be potted to cover adapters.

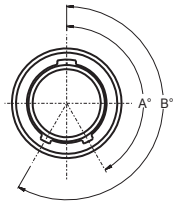

	A°	B°
A	150°	210°
B	75°	210°
C	95°	230°
D	140°	275°
E	75°	275°
F	95°	210°

Dimensions in Inches (millimeters) are subject to change without notice.

© 2013 Glenair, Inc.
U.S. CAGE Code 06324
Printed in U.S.A.

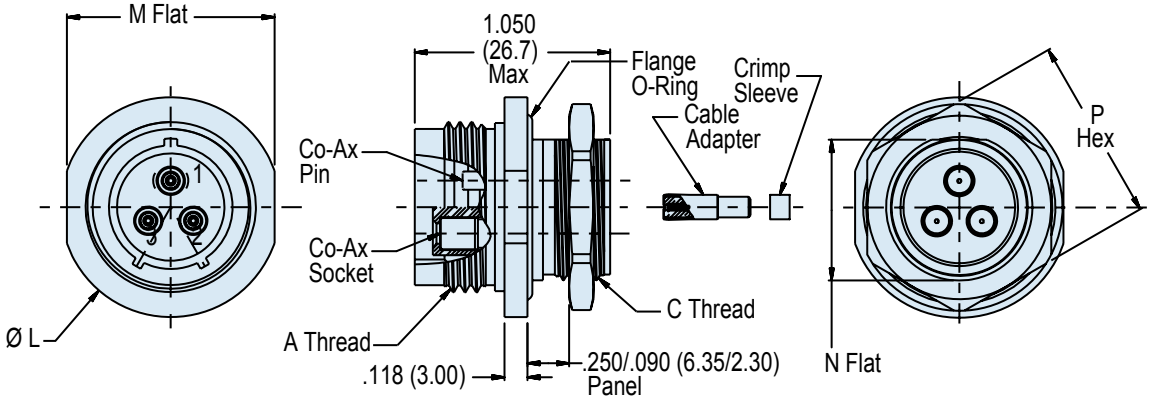

Front Panel Jam Nut Mount Submersible Hermetic
802-040-00

DIMENSIONS

Shell Size	L Max.		M Flat		A Mating Threads	C Threads	N Flat		P Hex	
	In.	mm.	In.	mm.			In.	mm.	In.	mm.
5	.720	18.29	.625	15.88	.438-28 UNEF-2A	.312-28 UN-2A	.281	7.14	.500	12.70
6	.780	19.81	.750	19.05	.562-20 UN-2A	.438-28 UN-2A	.344	8.74	.625	15.88
7	.910	23.11	.812	20.62	.625-20 UN-2A	.500-32 UN-2A	.469	11.91	.688	17.48
8	.960	24.38	.875	22.23	.687-20 UN-2A	.562-28 UN-2A	.531	13.49	.750	19.05
9	1.030	26.16	.937	23.80	.750-20 UNEF-2A	.625-20 UN-2A	.594	15.09	.812	20.62
10	1.090	27.69	1.000	25.40	.812-20 UNEF-2A	.687-28 UN-2A	.656	16.66	.875	22.23
12	1.160	29.46	1.062	26.97	.875-20 UNEF-2A	.750-28 UN-2A	.719	18.26	.938	23.83
14	1.340	34.04	1.250	31.75	1.062-20 UN-2A	.938-28 UN-2A	.893	22.68	1.125	28.58
15	1.410	35.18	1.312	33.32	1.125-20 UN-2A	1.000-28 UN-2A	.955	24.26	1.188	30.18
21	1.700	43.18	1.562	39.67	1.4375-20 UN-2A	1.312-28 UN-2A	1.257	31.93	1.500	38.10

SERIES 802 RECEPTACLE KEY POSITIONS

Key Position	Key Rotation A°	Key Rotation B°
Normal (A)	150°	210°
B	75°	210°
C	95°	230°
D	140°	275°
E	75°	275°
F	95°	210°

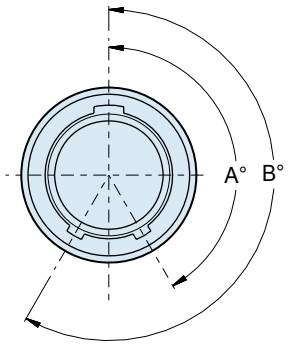

CUTOUT DIMENSIONS

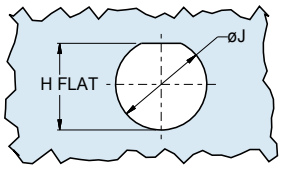

RECOMMENDED PANEL CUTOUT
FOR STYLE 00
FRONT MOUNT JAM NUT

Shell Size	H Flat In.	H Flat mm.	Ø J In.	Ø J mm.
5	.291/.286	7.4/7.3	.322	8.2
6	.417/.412	10.6/10.5	.448	11.4
7	.479/.474	12.2/12.0	.510	13.0
8	.541/.536	13.7/13.6	.572	14.5
9	.604/.599	15.3/15.2	.635	16.1
10	.666/.661	16.9/16.8	.697	17.7
12	.729/.724	18.5/18.4	.760	19.3
14	.903/.898	22.9/22.8	.948	24.1
15	.965/.960	24.5/24.4	1.010	25.7
21	1.267/1.263	32.2/32.1	1.322	33.6

Dimensions in Inches (millimeters) are subject to change without notice.

© 2013 Glenair, Inc.
U.S. CAGE Code 06324
Printed in U.S.A.

802-040-02
Series 802 "Aqua Mouse" Submersible
Coax Contacts • Sizes 12 and 16 Only
Front Panel Square Flange Mount Hermetic Receptacle

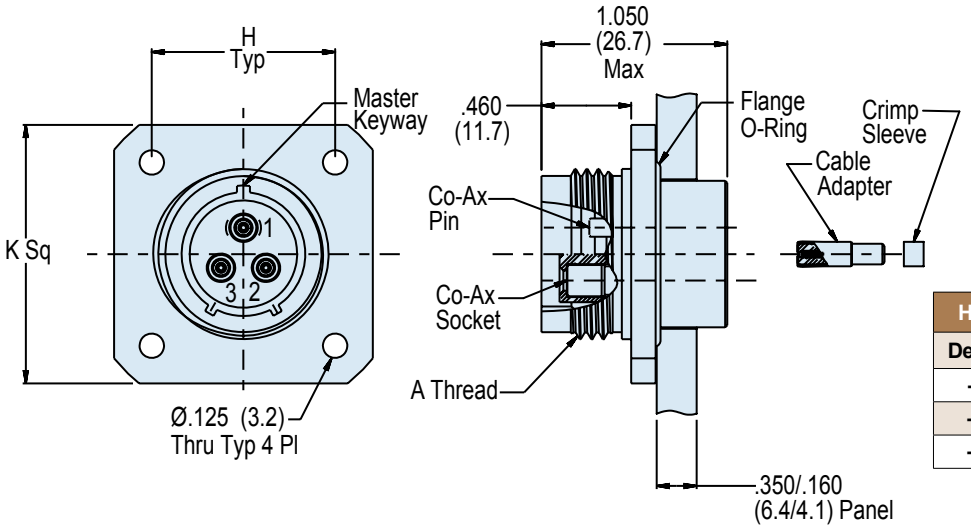

HERMETIC LEAK RATE MOD CODES	
Designator	**Required Leak Rate**
–585A	1 x 10^{-10} cc Helium per second
–585B	1 x 10^{-9} cc Helium per second
–585C	1 x 10^{-8} cc Helium per second

Front Panel Square Flange Mount Submersible Hermetic
802-040-02

DIMENSIONS

Shell Size	K Square		H Bsc.		A Mating Threads	Ø E	
	In.	mm.	In.	mm.		In.	mm.
5	.885	22.48	.500	12.70	.438-28 UNEF	.327	8.31
6	1.010	25.65	.625	15.88	.562-20 UN	.390	9.91
7	1.072	27.23	.688	17.48	.625-20 UN	.515	13.08
8	1.135	28.83	.750	19.05	.687-20 UN	.577	14.66
9	1.195	30.35	.812	20.62	.750-20 UNEF	.640	16.26
10	1.260	32.00	.875	22.23	.812-20 UNEF	.702	17.83
12	1.323	33.60	.938	23.83	.875-20 UNEF	.765	19.43
14	1.510	38.25	1.125	28.58	1.062-20 UN	.953	24.21
15	1.573	39.95	1.188	30.18	1.125-20 UN	1.015	25.78
21	1.750	44.45	1.375	34.93	1.4375-20 UN	1.312	33.32

SERIES 802 RECEPTACLE KEY POSITIONS

Key Position	Key Rotation A°	Key Rotation B°
Normal (A)	150°	210°
B	75°	210°
C	95°	230°
D	140°	275°
E	75°	275°
F	95°	210°

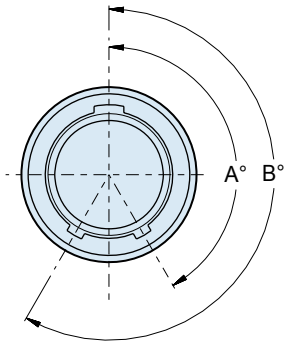

SERIES 802 SQ. FLANGE PANEL CUTOUT

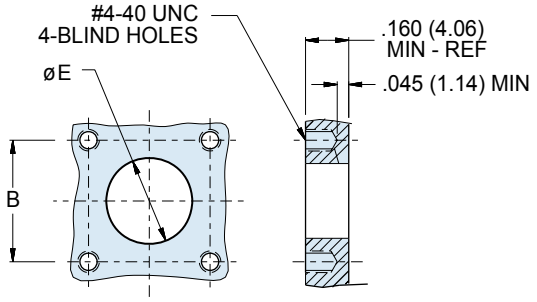

Dimensions in Inches (millimeters) are subject to change without notice.

© 2013 Glenair, Inc.
U.S. CAGE Code 06324
Printed in U.S.A.

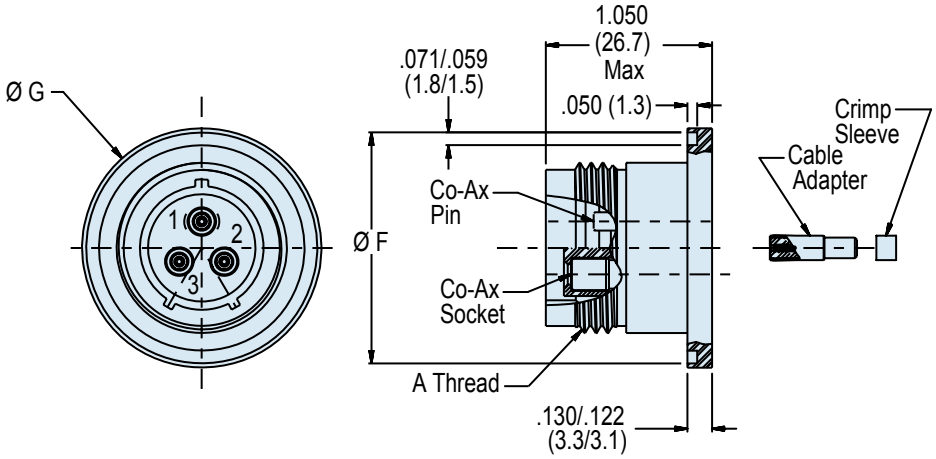

Weld Mount Submersible Hermetic
802-040-03

DIMENSIONS

Shell Size	Ø G In. ± .006	Ø G mm. ±0.15	Ø F In. ± .006	Ø F mm. ±0.15	A Mating Threads
5	.788	20.02	.745	18.92	.438-28 UNEF
6	.912	23.16	.869	22.07	.562-20 UN
7	.975	24.77	.933	23.70	.625-20 UN
8	1.038	26.37	.995	25.27	.687-20 UN
9	1.100	27.94	1.057	26.85	.750-20 UNEF
10	1.162	29.53	1.119	28.42	.812-20 UNEF
12	1.225	31.12	1.182	30.02	.875-20 UNEF
14	1.412	35.86	1.369	34.77	1.062-20 UN
15	1.475	37.47	1.432	36.37	1.125-20 UN
21	1.795	45.59	1.747	44.38	1.4375-20 UN

SERIES 802 RECEPTACLE KEY POSITIONS

Key Position	Key Rotation A°	Key Rotation B°
Normal (A)	150°	210°
B	75°	210°
C	95°	230°
D	140°	275°
E	75°	275°
F	95°	210°

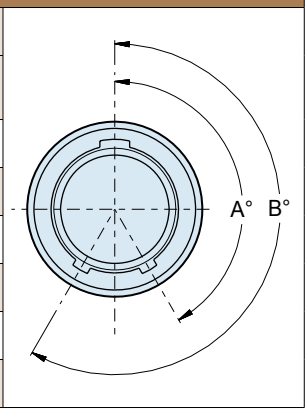

Dimensions in Inches (millimeters) are subject to change without notice.

© 2013 Glenair, Inc.
U.S. CAGE Code 06324
Printed in U.S.A.

802-040-07
Series 802 "Aqua Mouse" Submersible
Coax Contacts • Sizes 12 and 16 Only
Rear Panel Jam Nut Mount Hermetic Receptacle

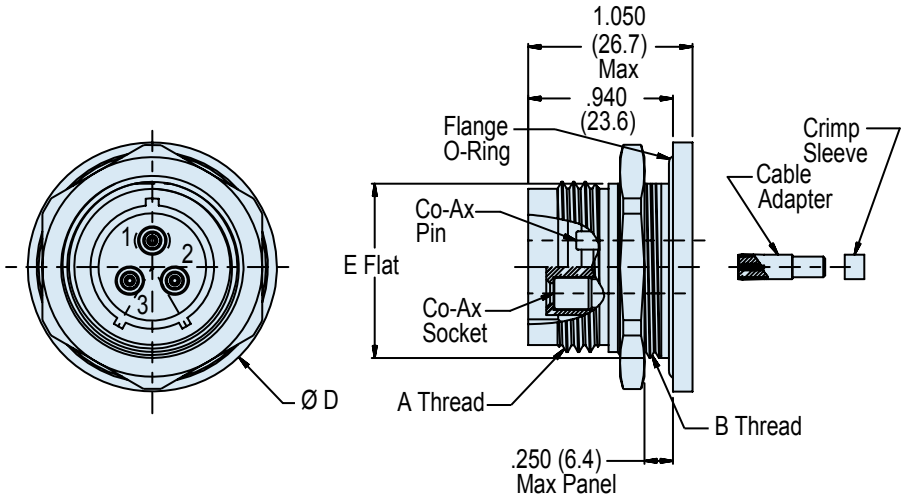

Rear Panel Jam Nut Mount Submersible Hermetic
802-040-07

DIMENSIONS						
Shell Size	D Max.		E Flat		A Mating Threads	B Threads
	In.	mm.	In. ± .003	mm. ± 0.08		
5	.885	22.48	.466	11.84	.438-28 UNEF	.500-32 UN-2A
6	1.010	25.65	.591	15.01	.562-20 UN	.625-20 UN-2A
7	1.072	27.23	.653	16.59	.625-20 UN	.687-28 UN-2A
8	1.135	28.83	.716	18.19	.687-20 UN	.750-28 UN-2A
9	1.195	30.35	.778	19.76	.750-20 UNEF	.812-28 UN-2A
10	1.260	32.00	.827	21.01	.812-20 UNEF	.875-28 UN-2A
12	1.322	33.58	.890	22.61	.875-20 UNEF	.938-28 UN-2A
14	1.510	38.25	1.077	27.36	1.062-20 UN	1.125-28 UN-2A
15	1.572	39.93	1.140	28.96	1.125-20 UN	1.188-28 UN-2A
21	1.940	49.28	1.464	37.19	1.4375-20 UN	1.500-28 UN-2A

SERIES 802 RECEPTACLE KEY POSITIONS			
Key Position	Key Rotation		
	A°	B°	
Normal (A)	150°	210°	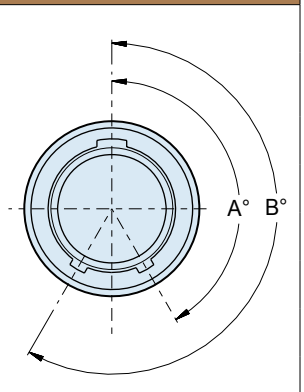
B	75°	210°	
C	95°	230°	
D	140°	275°	
E	75°	275°	
F	95°	210°	

Dimensions in Inches (millimeters) are subject to change without notice.

© 2013 Glenair, Inc.
U.S. CAGE Code 06324
Printed in U.S.A.

803-006
Series 803 Mighty Mouse Hermetic Receptacles
with ¼ Turn Bayonet Coupling
How to Order Information



Series 803 Hermetic Jam Nut Mount

Series 803 Hermetic Receptacles feature 304L stainless steel shells, fused vitreous glass insulators and gold-plated Alloy 52 iron alloy contacts.

1 X 10^{-7} cc/second maximum Helium leak rate when tested at 1 atmosphere vacuum.

Two Shell Styles are available: Jam Nut and Flange Mount.

Solder Cup Contacts accept up to #22 AWG stranded wire. Or, choose ***Printed Circuit Board Contacts*** for attachment to rigid boards or flexible circuits.

HERMETIC LEAK RATE MOD CODES	
Designator	**Required Leak Rate**
–585A	1 x 10^{-10} cc Helium per second
–585B	1 x 10^{-9} cc Helium per second
–585C	1 x 10^{-8} cc Helium per second

HOW TO ORDER

Sample Part Number

803-006	-07	Z1	9-19	P	N
Series	**Shell Style**	**Shell Material / Finish**	**Shell Size/Insert**	**Contact Type**	**Shell Key Position**
803-006 Hermetic Receptacles with Printed Circuit Board Contacts or Solder Cup Contacts	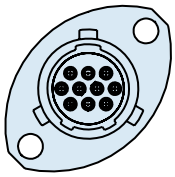 **-02** Flange Mount 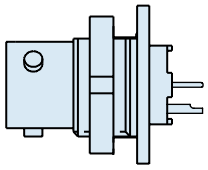 **-07** Jam Nut	**Z1** Stainless Steel / Passivated **ZL** Stainless Steel/ Nickel Plated *Titanium and Inconel® shell materials are available. Consult factory for ordering information.	See Page C-4 for Contact Arrangements	**P** Pin, Solder Cup **C** Pin, PC Tail **S** Socket, Solder Cup **D** Sockets, PC Tail	**N** Normal Alternate Key Positions: **X** **Y** **Z**

Dimensions in Inches (millimeters) are subject to change without notice.

© 2013 Glenair, Inc.
U.S. CAGE Code 06324
Printed in U.S.A.

803-006-02 and 803-006-07
Series 803 Mighty Mouse Hermetic Receptacles
¼ Turn Bayonet Coupling Flange Mount and Jam Nut
Connector Dimensions

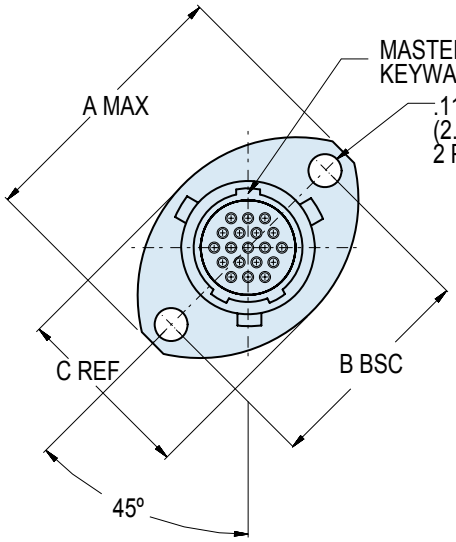

Flange Mount Receptacle
803-006-02

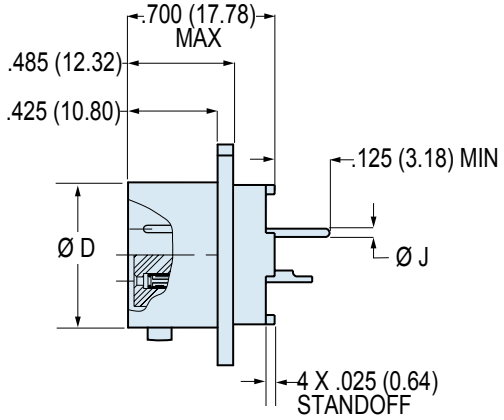

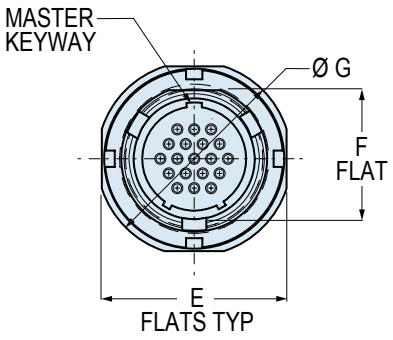

Jam Nut Receptacle
803-006-07

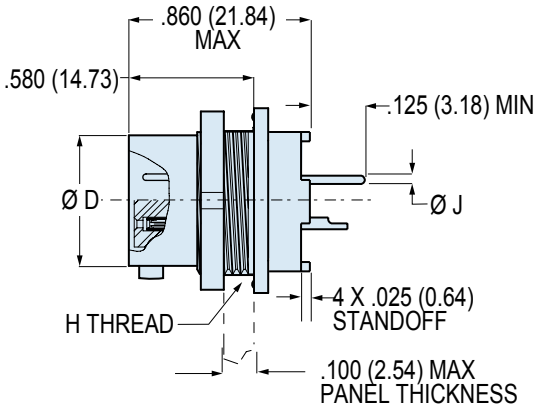

DIMENSIONS

Shell Size	A Max.		B Bsc.		C Ref.		Ø D		E Flats		F Flat		Ø G		H Thread	Ø J Tail Dia.
	In.	mm.	In.	mm.	In.	mm.	In.	mm.	In.	mm.	In.	mm.	In.	mm.		
5	.703	17.86	.513	13.03	.460	11.68	.300	7.62	.545	13.84	.350	8.89	.575	14.61	.3750-32 UNEF-2A	#23 .018/.022 (0.46/0.56)
6	.788	20.02	.598	15.19	.522	13.26	.362	9.19	.595	15.11	.410	10.42	.635	16.13	.4375-28 UNEF-2A	
7	.890	22.61	.708	17.98	.590	14.99	.436	11.07	.723	18.36	.536	13.61	.755	19.18	.5625-32 UN-2A	#20 .024/.028 (0.61/0.71)
8	1.154	29.31	.964	24.49	.668	16.97	.508	12.91	.790	20.07	.593	15.10	.755	19.18	.6250-32 UN-2A	
9	1.207	30.66	1.017	25.83	.721	18.31	.561	14.25	.790	20.07	.596	15.14	.830	21.08	.6250-28 UN-2A	#16 .060/.064 (1.52/1.63)
10	1.291	32.79	1.101	27.97	.795	20.19	.635	16.13	.925	23.51	.925	.721	.890	22.61	.7500-28 UN-2A	
12	1.394	35.41	1.204	30.58	.874	22.20	.714	18.14	1.044	26.52	.845	21.46	1.078	27.38	.8750-28 UN-2A	#12 .092/.096 (2.34/2.44)
14	1.545	39.24	1.280	32.51	1.050	26.67	.865	21.97	1.230	31.24	1.022	25.96	1.264	32.11	1.0625-20 UN-2A	

Dimensions in Inches (millimeters) are subject to change without notice.

© 2013 Glenair, Inc.
U.S. CAGE Code 06324
Printed in U.S.A.



Series 804 Hermetic Jam Nut Mount

Series 804 Hermetic Receptacles feature 304L stainless steel shells, fused vitreous glass insulators and gold-plated Alloy 52 iron alloy contacts.

1 X 10^{-7} cc/second maximum helium leak rate when tested at 1 atmosphere vacuum.

Two Shell Styles are available:
Style 00 for front panel mounting
Style 07 for rear panel mounting.

"Push-Pull" Quick-Disconnect
Canted coil spring securely retains mating plug connector and provides low shell-to-shell resistance for excellent EMI shielding. O-ring inside receptacle shell provides water-tight seal when mated.

HOW TO ORDER

Sample Part Number

804-006	-07	Z1	9-19	P	A
Series	**Shell Style**	**Shell Material / Finish**	**Shell Size/Insert**	**Contact Type**	**Shell Key Position**
804-006 Hermetic Receptacles with Printed Circuit Board Contacts or Solder Cup Contacts	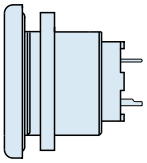 **-00** Jam Nut, Front Panel 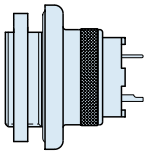 **-07** Jam Nut, Rear Panel	**Z1** Stainless Steel / Passivated **ZL** Stainless Steel/ Nickel Plated *Titanium and Inconel® shell materials are available. Consult factory for ordering information.	See Page C-4 for Contact Arrangements	**P** Pin, Solder Cup **C** Pin, PC Tail **S** Socket, Solder Cup **D** Socket, PC Tail	**Omit** for Single Master Key **A** Pos. A (Normal) **B** Pos. B **C** Pos. C **D** Pos. D

Dimensions in Inches (millimeters) are subject to change without notice.

© 2013 Glenair, Inc.
U.S. CAGE Code 06324
Printed in U.S.A.

804-006-00
Series 804 Mighty Mouse Hermetic Receptacles
Front Panel Jam Nut Mount Connector Dimensions

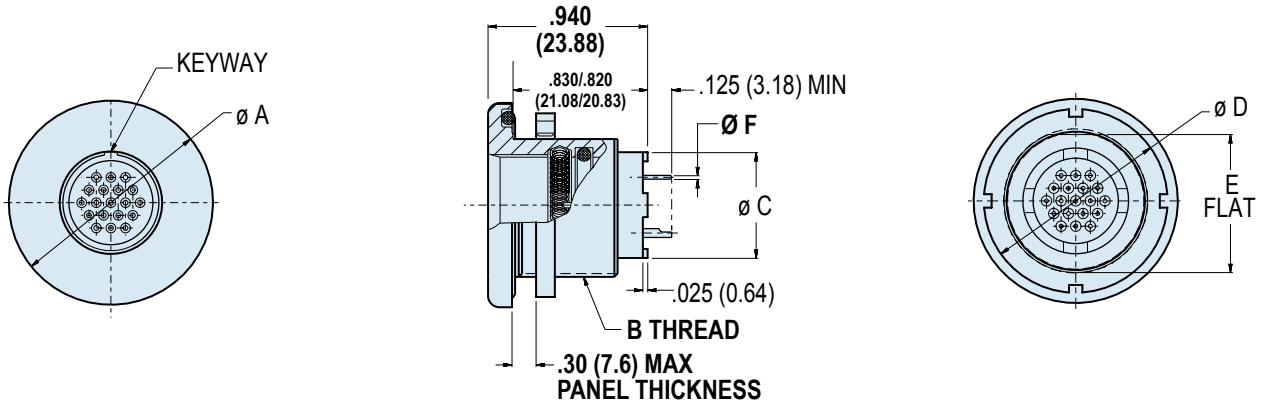

Front Panel Jam Nut
804-006-00

DIMENSIONS

Shell Size	Ø A		B Threads	Ø C		Ø E		E Flat		Ø F Tail Dia.
	In.	mm.		In.	mm.	In.	mm.	In.	mm.	
5	.830	21.08	.5000-32 UN-2A	.244	6.20	.625	15.87	.470	11.94	**#23** .018/.022 (0.46/0.56) **#20** .024/.028 (0.61/0.71) **#16** .060/.064 (1.52/1.63) **#12** .092/.096 (2.34/2.44)
6	.885	22.48	.5625-28 UN-2A	.336	8.53	.688	17.47	.530	13.46	
7	.995	25.27	.6875-32 UN-2A	.432	10.97	.812	20.62	.663	16.84	
8	.995	25.27	.6875-32 UN-2A	.493	12.52	.812	20.62	.663	16.84	
9	1.075	27.31	.7500-28 UN-2A	.551	14.00	.875	22.22	.720	18.29	
10	1.140	28.95	.8125-28 UN-2A	.620	15.75	.938	23.82	.788	20.02	
12	1.340	34.04	1.0000-28 UN-2A	.703	17.86	1.125	28.57	.970	24.64	
14	1.390	35.31	1.0625-20 UN-2A	.863	21.92	1.188	30.18	1.020	25.91	
15	1.450		1.0625-20 UN-2A	.912		1.093		1.093		

ALTERNATE KEY POSITIONS

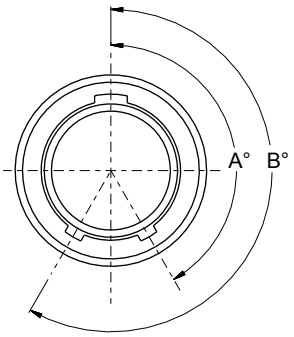

Pos.	A°	B°
A	150°	210°
B	75°	210°
C	95°	230°
D	140°	275°
E	75°	275°
F	95°	210°

JAM NUT PANEL CUTOUT

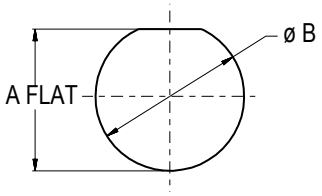

Shell Size	A Flat		Ø B	
	In. ± .002	mm. ± 0.05	In.	mm.
5	.480	12.19	.510	12.95
6	.540	13.72	.575	14.61
7	.674	17.12	.698	17.73
8	.674	17.12	.698	17.73
9	.730	18.54	.760	19.30
10	.799	20.29	.822	20.88
11	.853	21.67	.885	22.48
12	.980	24.89	1.010	25.65
14	1.030	26.16	1.075	27.31
15	1.013	25.73	1.135	28.83

Dimensions in Inches (millimeters) are subject to change without notice.

© 2013 Glenair, Inc.
U.S. CAGE Code 06324
Printed in U.S.A.

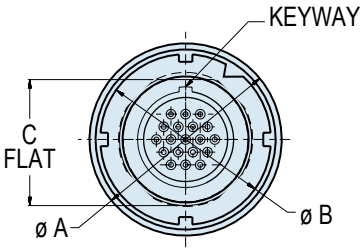

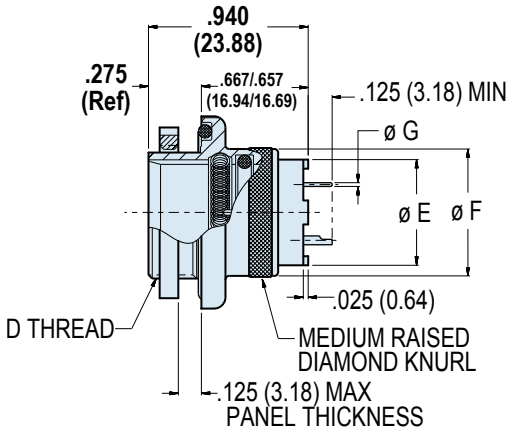

Rear Panel Jam Nut
804-006-07

DIMENSIONS

Shell Size	Ø A		Ø B		C Flat		D Threads	Ø E		Ø F		Ø G Tail Dia.
	In.	mm.	In.	mm.	In.	mm.		In.	mm.	In.	mm.	
5	.790	20.07	.562	14.27	.415	10.54	.4375-32 UN-2A	.244	6.20	.450	11.43	
6	.830	21.08	.625	15.87	.467	14.40	.5000-32 UN-2A	.330	8.38	.520	13.21	
7	.910	23.11	.750	19.05	.594	15.09	.6250-28 UN-2A	.432	10.97	.580	14.73	**#23** .018/.022 (0.46/0.56)
8	.955	24.26	.750	19.05	.594	15.09	.6250-28 UN-2A	.493	12.52	.603	15.32	
9	1.000	25.40	.812	20.62	.655	16.64	.6875-32 UN-2A	.551	14.00	.695	17.65	**#20** .024/.028 (0.61/0.71)
10	1.085	27.48	.875	22.22	.721	18.31	.7500-28 UN-2A	.620	15.75	.735	18.67	
11	1.135	28.83	.938	23.82	.788	20.01	.8125-28 UN-2A	.662	16.81	.810	20.57	**#16** .060/.064 (1.52/1.63)
12	1.180	29.97	1.000	25.40	.843	21.41	.8750-28 UN-2A	.703	17.86	.880	22.35	
14	1.325	33.66	1.125	28.57	.968	24.59	1.0000-28 UN-2A	.863	21.92	1.010	25.65	**#12** .092/.096 (2.34/2.44)
15	1.390	35.30	1.188	30.17	1.029	26.14	1.0625-28 UN-2A	.912	23.16	1.060	26.92	

ALTERNATE KEY POSITIONS

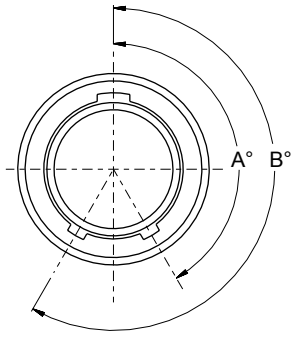

Pos.	A°	B°
A	150°	210°
B	75°	210°
C	95°	230°
D	140°	275°
E	75°	275°
F	95°	210°

JAM NUT PANEL CUTOUT

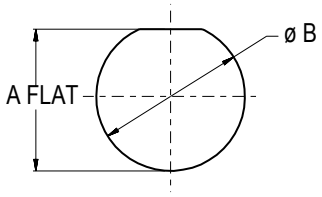

Shell Size	A Flat		Ø B	
	In. ± .002	mm. ± 0.05	In.	mm.
5	.425	10.80	.448	11.38
6	.477	12.12	.510	12.95
7	.604	15.34	.635	16.13
8	.604	15.34	.635	16.13
9	.665	16.89	.695	17.65
10	.731	18.57	.760	19.30
12	.853	21.67	.885	22.48
14	.978	24.84	1.010	25.65
15	1.039	26.39	1.070	27.18

Dimensions in Inches (millimeters) are subject to change without notice.

© 2013 Glenair, Inc. U.S. CAGE Code 06324 Printed in U.S.A.

805-006
Series 805 Mighty Mouse Hermetic Receptacles
Triple-Start Threaded Ordering Information



Series 805 Hermetic Jam Nut Connector

Series 805 Hermetic Receptacles feature 304L stainless steel shells, fused vitreous glass insulators and Alloy 52 iron alloy contacts. Triple-start ACME thread provides fast mating and cross-threading protection. Mating plug connectors feature EMI springs and ratcheting anti-decoupling mechanism for resistance to vibration. 1000 PSI open face pressure. Fluorosilicone seals for water ingress protection. Contacts are gold-plated 50 microinches minimum.

1 X 10^{-7} cc/second maximum helium leak rate.

Two Shell Styles: jam nut or square flange.

Solder Cup Contacts for #22 AWG wire, or ***PC Tail Contacts*** for attachment to flexible or rigid circuits.

HOW TO ORDER SERIES 800 HERMETIC RECEPTACLES

Sample Part Number

805-006	-07	Z1	12-26	C	A
Series	**Shell Style**	**Shell Material / Finish**	**Shell Size- Insert Arrangement**	**Contact Type**	**Shell Key Position**
805-006 Hermetic Receptacle	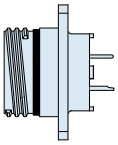 **-02** Square Flange 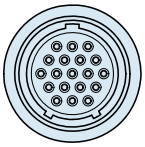 **-03** Solder Mount 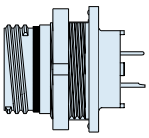 **-07** Jam Nut 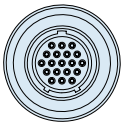 **-13** Weld Mount	**Z1** Stainless Steel / Passivated **ZL** Stainless Steel / Nickel Plated *Titanium and Inconel® shell materials are available. Consult factory for ordering information.	See Page C-4 for Contact Arrangements	**P** Pin, Solder Cup **C** Pin, PC Tail **S** Socket, Solder Cup **D** Socket, PC Tail	**A** Position A (Normal) **B** Position B **C** Position C **D** Position D **E** Position E **F** Position F

Dimensions in Inches (millimeters) are subject to change without notice.

© 2013 Glenair, Inc.

805-006-02
Series 805 Mighty Mouse Triple-Start
Flange Mount Hermetic Receptacles

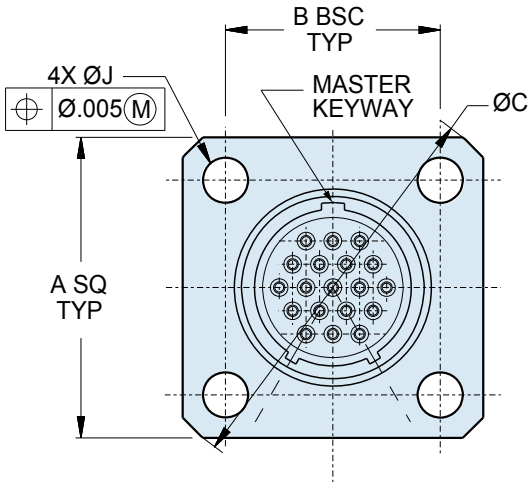

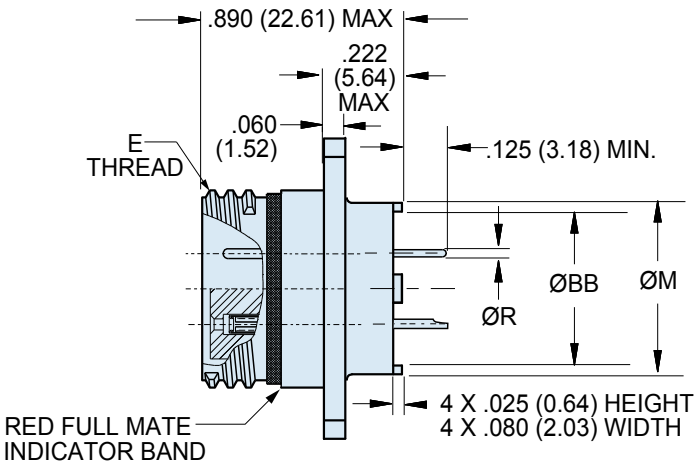

DIMENSIONS

Shell Size	A SQ		B BSC		BB		Ø C		Ø J Holes	K Threads	Ø M		Ø R Tail Dia.
	In.	mm.	In.	mm.	In.	mm.	In.	mm.			In.	mm.	
8	.850	21.59	.660	16.76	.236	5.99	1.150	29.21	.096 .091 (2.44) (2.31)	.5000-.1P-.3L-TS-2A	.330	8.38	#23 .018/.022 (0.46/0.56)
9	.913	23.19	.723	18.36	.322	8.18	1.230	31.24		.5625-.1P-.3L-TS-2A	.432	10.97	
10	.975	24.77	.785	19.94	.386	9.80	1.330	33.78		.6250-.1P-.3L-TS-2A	.493	12.52	
11	1.039	26.39	.848	21.54	.442	11.23	1.410	35.81		.6875-.1P-.3L-TS-2A	.553	14.05	#20 .024/.028 (0.61/0.71)
12	1.099	27.91	.909	23.09	.513	13.03	1.500	38.10		.7500-.1P-.3L-TS-2A	.620	15.75	
13	1.163	29.54	.973	24.71	.554	14.07	1.590	40.39		.8125-.1P-.3L-TS-2A	.661	16.79	#16 .060/.064 (1.52/1.63)
15	1.288	32.74	1.058	26.87	.594	15.09	1.750	44.45	.130 .126 (3.30) (3.20)	.9375-.1P-.3L-TS-2A	.703	17.86	
18	1.475	37.47	1.255	31.88	.755	19.18	2.000	50.80		1.1250-.1P-.3L-TS-2A	.863	21.92	
19	1.537	71.06	1.327	33.71	.805	20.45	2.094	53.19		1.1875-.1P-.3L-TS-2A	.912	23.16	#12 .092/.096 (2.34/2.44)
21	1.663	42.24	1.452	36.88	.910	23.11	2.270	57.66		1.3125-.1P-.3L-TS-2A	1.017	25.83	
23	1.787	44.68	1.576	40.03	1.055	26.80	2.440	61.98		1.4375-.1P-.3L-TS-2A	1.162	29.51	

PERFORMANCE SPECIFICATIONS

DWV (VAC Sea Level)	#23 500 V., #20HD 750 V., #12 AND #16 1800 V.
Insulation Resistance	5000 Megohms Minimum
Operating Temperature	-55° C. to +150° C.
Immersion, Mated	MIL-STD-810 Method 512. One Meter for One Hour.
Hermeticity	1 x 10-7 cc/sec Helium Leak Rate @ 1 Atmosphere Diff.

MATERIALS AND FINISHES

Shell	304L Stainless Steel
Insulator	Fused Vitreous Glass
Seals	Fluorosilicone Rubber, Blue
Contacts	Iron Alloy (Alloy 52)

SERIES 805 KEY POSITIONS

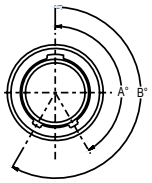

Key Position	Key Rotation A°	Key Rotation B°
Normal (A)	150°	210°
B	75°	210°
C	95°	230°
D	140°	275°
E	75°	275°
F	95°	210°

Dimensions in Inches (millimeters) are subject to change without notice.

© 2013 Glenair, Inc.
U.S. CAGE Code 06324
Printed in U.S.A.

805-006-03
Series 805 Mighty Mouse Triple-Start
Solder Mount Hermetic Receptacles

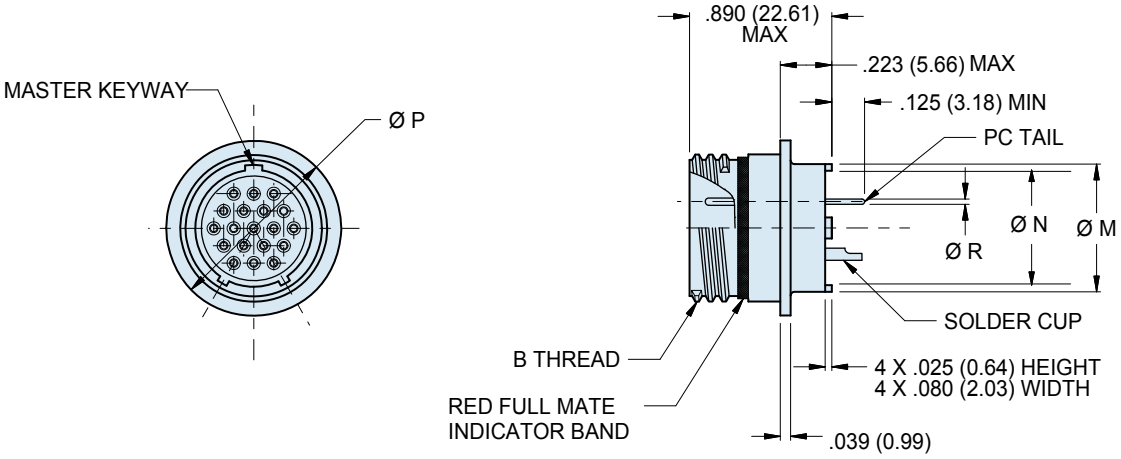

DIMENSIONS								
Shell Size	Ø P		B Threads	M Ø		N Ø		Ø R Tail Dia.
	In.	mm.		In.	mm.	In.	mm.	
8	.625	15.88	.5000-.1P-.3L-TS-2A	.330	8.38	.236	5.99	**#23** .018/.022 (0.46/0.56)
9	.688	17.48	.5625-.1P-.3L-TS-2A	.432	10.97	.322	8.18	
10	.750	19.75	.6250-.1P-.3L-TS-2A	.493	12.52	.386	9.80	
11	.812	20.62	.6875-.1P-.3L-TS-2A	.553	14.05	.442	11.23	**#20** .024/.028 (0.61/0.71)
12	.875	22.23	.7500-.1P-.3L-TS-2A	.620	15.75	.513	13.03	
13	.938	23.83	.7500-.1P-.3L-TS-2A	.661	16.79	.554	14.07	
15	1.062	26.97	.9375-.1P-.3L-TS-2A	.703	17.86	.594	15.09	**#16** .060/.064 (1.52/1.63)
18	1.250	31.75	1.1250-.1P-.3L-TS-2A	.863	21.92	.755	19.18	
19	1.312	33.32	1.1875-.1P-.3L-TS-2A	.912	23.16	.805	20.45	**#12** .092/.096 (2.34/2.44)
21	1.438	36.53	1.3725-.1P-.3L-TS-2A	1.017	25.83	.910	23.11	
23	1.562	39.67	1.4375-.1P-.3L-TS-2A	1.162	29.51	1.055	26.80	

SERIES 805 KEY POSITIONS

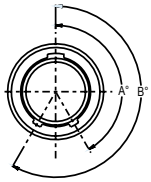

Key Position	Key Rotation A°	B°
Normal (A)	150°	210°
B	75°	210°
C	95°	230°
D	140°	275°
E	75°	275°
F	95°	210°

Dimensions in Inches (millimeters) are subject to change without notice.

© 2013 Glenair, Inc.
U.S. CAGE Code 06324
Printed in U.S.A.

805-006-07
Series 805 Mighty Mouse Triple-Start
Jam Nut Mount Hermetic Receptacles

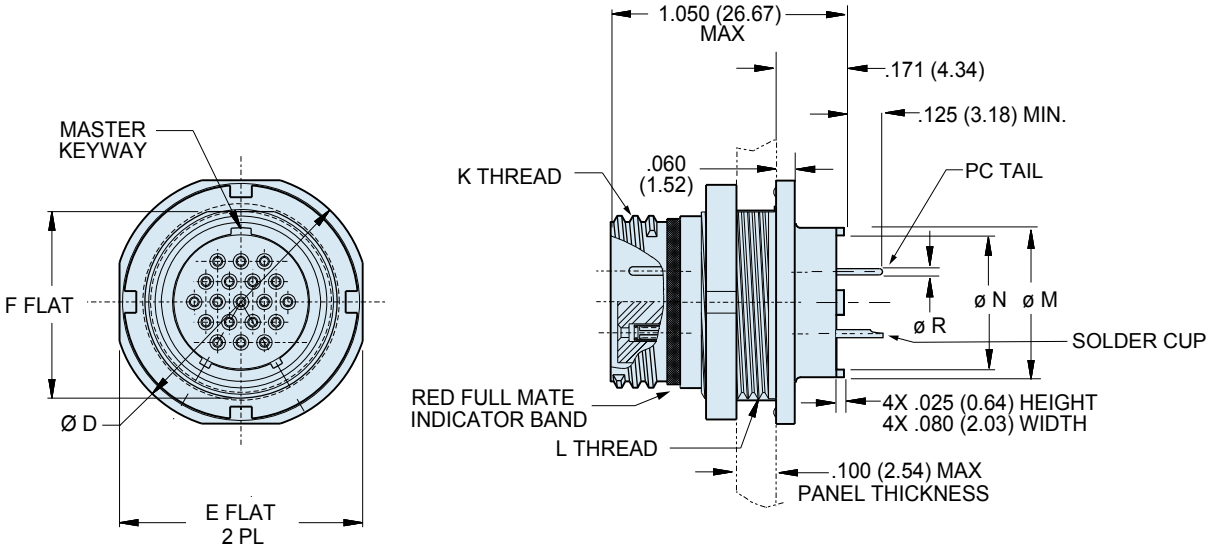

DIMENSIONS

Shell Size	Ø D		E Flat		F Flat		Ø M		Ø N		K Thread	L Thread	Ø R Tail Dia.
	In.	mm.	In.	mm.	In.	mm.	In.	mm.	In.	mm.			
8	.760	19.30	.730	18.54	.535	13.59	.330	8.38	.236	5.99	.5000-.1P-.3L-TS-2A	.5625-28 UNEF-2A	**#23** .018/.022 (0.46/0.56)
9	.880	22.35	.850	21.59	.661	16.79	.432	10.97	.322	8.18	.5625-.1P-.3L-TS-2A	.6875-28 UN-2A	
10	.880	22.35	.850	21.59	.661	16.79	.493	12.52	.386	9.80	.6250-.1P-.3L-TS-2A	.6875-28 UN-2A	
11	.955	24.26	.925	23.50	.721	18.31	.553	14.05	.442	11.23	.6875-.1P-.3L-TS-2A	.7500-28 UN-2A	**#20** .024/.028 (0.61/0.71)
12	1.060	26.92	1.035	26.29	.784	19.91	.620	15.75	.513	13.03	.7500-.1P-.3L-TS-2A	.8125-28 UN-2A	
13	1.120	28.45	1.090	27.69	.843	21.41	.661	16.79	.554	14.07	.8125-.1P-.3L-TS-2A	.8750-28 UN-2A	
15	1.203	30.56	1.173	29.79	.970	24.64	.703	17.86	.594	15.09	.9375-.1P-.3L-TS-2A	1.0000-28 UN-2A	**#16** .060/.064 (1.52/1.63)
18	1.389	35.28	1.359	34.52	1.147	29.13	.863	21.92	.755	19.18	1.1250-.1P-.3L-TS-2A	1.1875-28 UN-2A	
19	1.450	36.83	1.420	36.07	1.221	31.01	.912	23.16	.805	20.45	1.1875-.1P-.3L-TS-2A	1.2500-28 UN-2A	
21	1.580	40.13	1.550	39.37	1.350	34.29	1.017	25.83	.910	23.11	1.3125-.1P-.3L-TS-2A	1.3750-28 UN-2A	**#12** .092/.096 (2.34/2.44)
23	1.705	43.31	1.675	42.55	1.470	37.34	1.162	29.51	1.055	26.80	1.4375-.1P-.3L-TS-2A	1.5000-25 UN-2A	

PANEL CUTOUT FOR JAM NUT RECEPTACLE

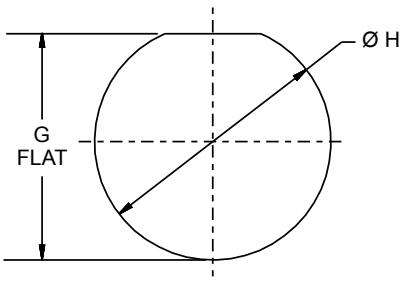

Shell Size	G Flat		Ø H	
	In.	mm.	In.	mm.
8	.547 .543	13.89 13.79	.575 .571	14.61 14.50
9	.673 .669	17.09 16.99	.700 .696	17.78 17.68
10	.673 .669	17.09 16.99	.700 .696	17.78 17.68
11	.733 .729	18.62 18.52	.762 .758	19.35 19.25
12	.796 .792	20.22 20.12	.825 .821	20.96 20.85
13	.853 .849	21.67 21.56	.887 .883	22.53 22.43
15	.982 .978	24.94 24.84	1.012 1.008	25.70 25.60
18	1.159 1.155	29.44 29.34	1.200 1.196	30.48 30.38
19	1.233 1.229	31.32 31.22	1.262 1.258	32.05 31.95
21	1.360 1.356	34.54 34.44	1.387 1.383	35.23 35.13
23	1.482 1.478	37.64 37.54	1.512 1.508	38.40 38.30

SERIES 805 KEY POSITIONS

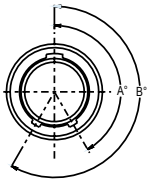

Key Position	Key Rotation A°	Key Rotation B°
Normal (A)	150°	210°
B	75°	210°
C	95°	230°
D	140°	275°
E	75°	275°
F	95°	210°

Dimensions in Inches (millimeters) are subject to change without notice.

© 2013 Glenair, Inc.
U.S. CAGE Code 06324
Printed in U.S.A.

805-006-013
Series 805 Mighty Mouse Triple-Start
Front Panel Weld Mount Hermetic Receptacles

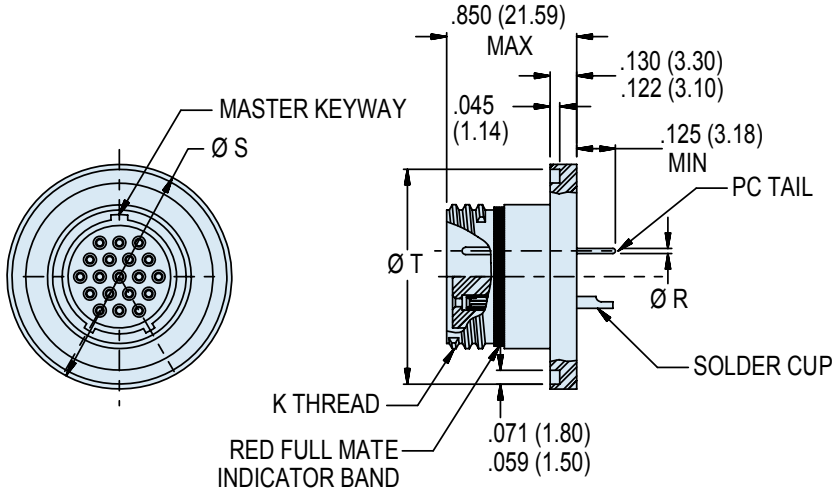

PANEL CUTOUT FOR WELD MOUNT RECEPTACLE

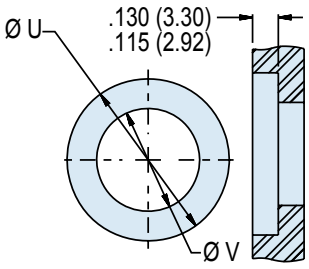

Shell Size	Ø U ± .003		Ø V Min	
	In.	mm.	In.	mm.
8	.794	20.16	.350	8.89
9	.918	23.32	.455	11.56
10	.981	24.92	.520	13.21
11	1.044	26.52	.575	14.61
12	1.106	28.09	.650	16.51
13	1.168	29.67	.685	17.40
15	1.294	32.87	.730	18.54
18	1.481	37.62	.890	22.61
19	1.546	39.27	.940	23.88
21	1.671	42.44	1.040	26.42
23	1.801	45.75	1.190	30.23

Dimensions in Inches (millimeters) are subject to change without notice.

© 2013 Glenair, Inc. U.S. CAGE Code 06324 Printed in U.S.A.

DIMENSIONS					
Shell Size	Ø S ± .002		Ø T ± .006		Ø R Tail Dia.
	In.	mm.	In.	mm.	
8	.788	20.02	.745	18.92	#23 .018/.022 (0.46/0.56)
9	.912	23.16	.869	22.07	
10	.975	24.77	.933	23.70	
11	1.038	26.37	.995	25.27	#20 .024/.028 (0.61/0.71)
12	1.100	27.94	1.057	26.85	
13	1.162	29.51	1.119	28.42	
15	1.288	32.72	1.245	31.63	#16 .060/.064 (1.52/1.63)
18	1.475	37.47	1.430	36.32	
19	1.540	39.12	1.495	37.97	#12 .092/.096 (2.34/2.44)
21	1.665	42.29	1.620	41.15	
23	1.795	45.59	1.750	44.45	

SERIES 805 KEY POSITIONS

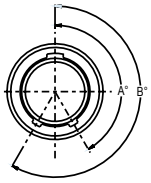

Key Position	Key Rotation A°	B°
Normal (A)	150°	210°
B	75°	210°
C	95°	230°
D	140°	275°
E	75°	275°
F	95°	210°

Dimensions in Inches (millimeters) are subject to change without notice.

© 2013 Glenair, Inc.
U.S. CAGE Code 06324
Printed in U.S.A.

MIL-DTL-26482
TYPE

BAYONET-LOCK

Hermetic Connectors
Fast and Reliable Mating



Glenair MIL-DTL-26482 Series I and II Bayonet-Lock Connectors are ideally suited for vacuum chambers and other military and commercial applications that utilize this general purpose medium density cylindrical connector and require helium leak test rates of less than $1x10^{-7}$ cc/second. The bayonet mechanism provides fast and easy coupling, especially when the connector is situated in an awkward or hard to reach location. A wide range of available mounting styles—including both narrow and wide flange mounts—provide complete flexibility in interconnect system design. PCB and solder cup contacts allow easy integration and termination to I/O cabling and electronic sub-systems. Glenair MIL-DTL-26482 Type hermetics are interchangeable and intermateable with the wide range of industry-standard bayonet connectors designed around MIL-DTL-26482 and/or qualified to VG 95328, including ITT Cannon KPT.

GLASS-SEALED
Hermetic
CONNECTORS

Glenair®

Glenair, Inc.
1211 Air Way
Glendale, CA
91201-2497
818-247-6000
sales@glenair.com
www.glenair.com

A Comprehensive Line of MIL-DTL-26482 Series I and II Type Bayonet Glass Sealed Hermetic Connectors

MIL-DTL-26482 Series I and II Bayonet Lock Connectors are general purpose medium density connectors, with a variety of mounting styles incuding bulkhead feed-thrus, jam-nut, flange mount and solder cup receptacles. All feature quick release bayonet coupling. 9 shell sizes with up to 61 AWG contacts in size #20, #16, and #12 and #8 are offered. Material and finish options include titanium and Inconel®, and space grade screening is available.

Quick Selection Guide

Part Number	Description	Page
	MIL-DTL-26482 Type Insert Arrangements	D-2
	MIL-DTL-26482 Type Alternate Key Positions	D-3
	Glenair Hermetic Connector Products Special Leak Rate Mod Codes	D-4
	Glenair Hermetic Connector Products Space Grade Mod Codes	D-5
230-014	Bayonet Coupling Solder Mount Receptacle MS3113 Type	D-6
230-015	Bayonet Coupling Jam Nut Receptacle MS3114 Type	D-8
947-303	Narrow Flange Mount Bulkhead Feed-Thru MS3440 Type	D-10
230-035	Bayonet Coupling Narrow Flange Mount Receptacle MS3112 Type	D-12
230-016	Bayonet Coupling Narrow Flange Mount Receptacle MS3440 Type	D-14
230-017	Bayonet Coupling Wide Flange Mount Receptacle MS3442 Type	D-16
230-018	Bayonet Coupling Solder Flange Mount Receptacle MS3443 Type	D-18
230-019	Quick Release Bayonet Receptacle, Single Hole Jam Nut MS3449 Type	D-20
230-020	Bayonet Coupling Solder Mount Receptacle with Solderless Contacts MS3473 Type	D-22
230-021	Bayonet Coupling Box Mount Receptacle with Solderless Contacts MS3477 Type	D-24
230-022	Bayonet Coupling Jam Nut Mount Receptacle with Solderless Contacts MS3479 Type	D-26
237-034	Bayonet Coupling Jam Nut Receptacle MS3449 Type	D-28
230-051	Special Narrow Square Flange Mount Hermetic Receptacle MS3440 Type	D-30
230-133	Square Flange Mount Hermetic Receptacle MS3112 Type	D-32
237-240	MIL-DTL-26482 Series I Connector, Special Square Flange Mount, Bayonet Coupling	D-34
257-135	Bayonet Coupling Jam Nut Mount Pin/Pin Bulkhead Feed-Thru Receptacle	D-36
947-292	Bayonet Coupling Jam Nut Mount Bulkhead Feed-Thru Receptacle	D-38

© 2013 Glenair, Inc.

GLENAIR, INC. • 1211 AIR WAY • GLENDALE, CA 91201-2497 • 818-247-6000 • FAX 818-500-9912
www.glenair.com
E-Mail: sales@glenair.com

MIL-DTL-26482 Type
Insert Arrangements per MIL-DTL-1669

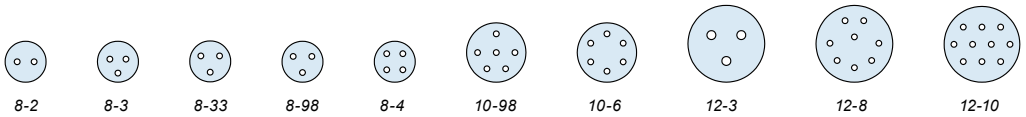

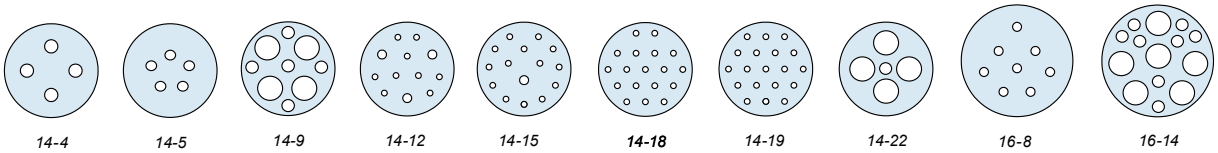

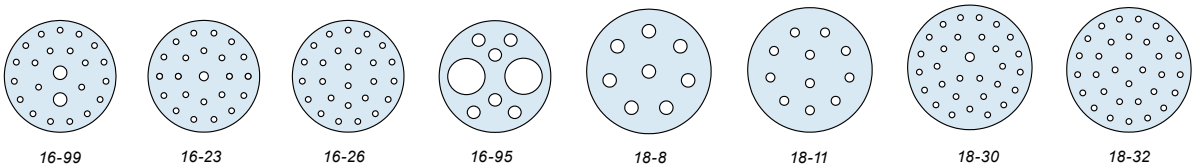

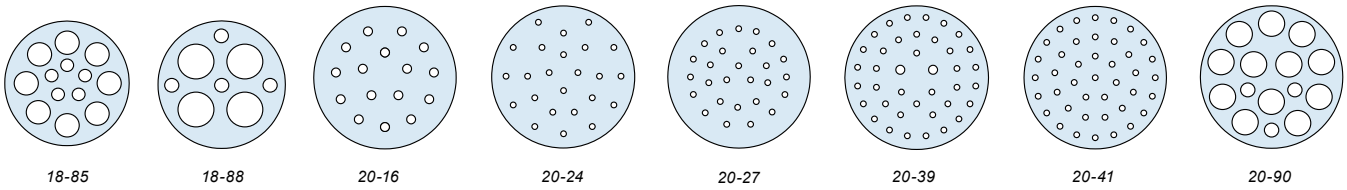

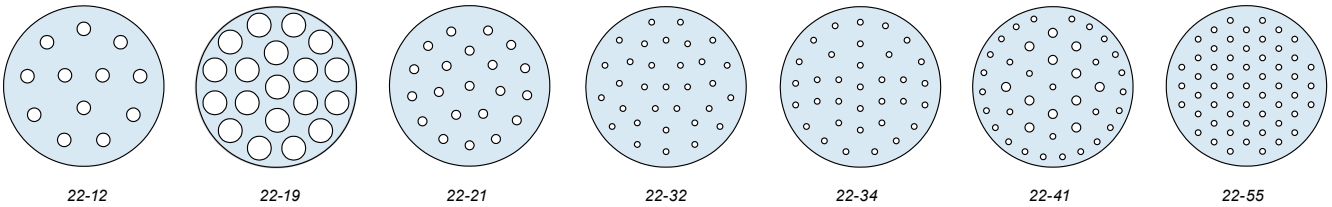

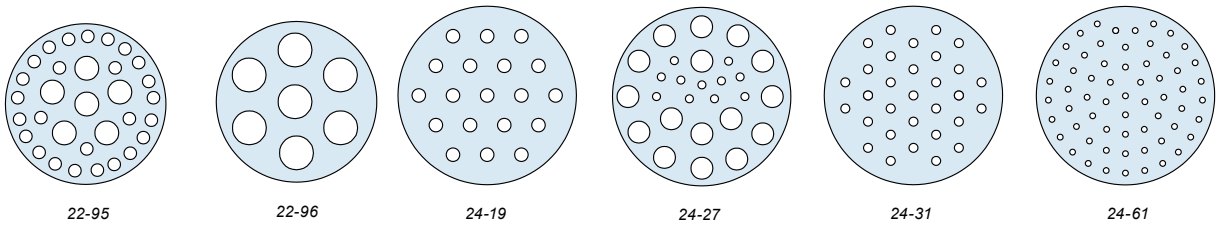

© 2013 Glenair, Inc.

Insert Arrangements

Shell Size Designator	Insert Arrangement Dash Number	Contact Size and Quantity				Service Rating
		20	16	12	8	
8	8-2	2				I
	8-3	3				I
	8-4	4				I
	8-33	3				I
	8-98	3				I
10	10-6	6				I
	10-98	6				I
12	12-3		3			II
	12-8	8				I
	12-10	10				I
14	14-4			4		I
	14-5		5			II
	14-9	5		4		I
	14-12	8	4			I
	14-15	14	1			I
	14-18	18				I
	14-19	19				I
	14-22	1		4		I
16	16-8		8			II
	16-14	8		6		I
	16-23	22	1			I
	16-26	26				I
	16-95	6			2[1]	I
	16-99	21	2			I
18	18-8			8		I
	18-11		11			II
	18-30	29	1			I
	18-32	32				I
	18-85	5		8		I
	18-88	88			4[1]	I
20	20-16		16			II
	20-24	24				I
	20-27	27				I
	20-39	37	2			I
	20-41	41				I
	20-90	3		12		I
22	22-12			12		I
	22-19			19		I
	22-21		21			II
	22-32	32				I
	22-34	34				I
	22-41	27	14			I
	22-55	55				I
	22-95	26		6		I
	22-96				7[1]	I
24	24-19			19		II
	24-27	11		16		I
	24-31		31			I
	24-61	61				I

Note 1: Shielded, not applicable to Series II.

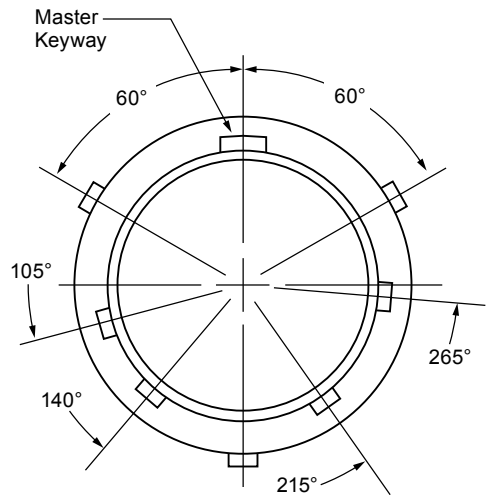

Receptacle

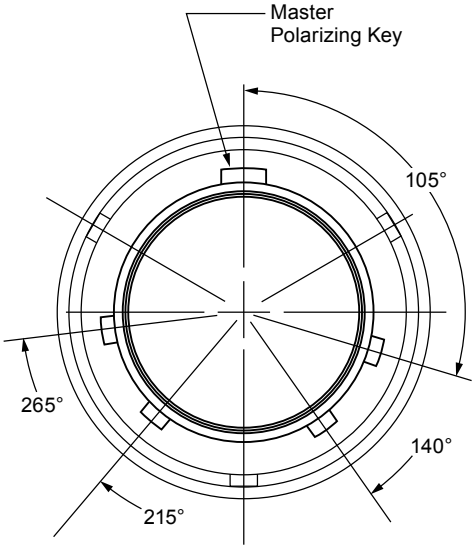

Plug

© 2013 Glenair, Inc.

Glenair Hermetic Connector Products
Special Leak Rate Mod Codes

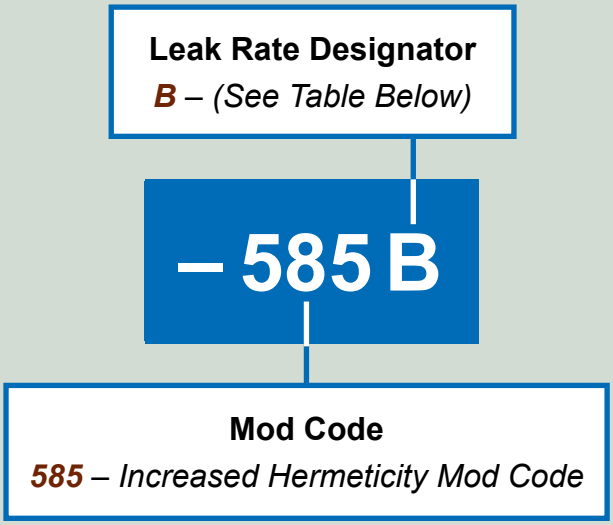

What is the –585 Mod Code?

Glenair offers an array of hermetic connectors with more stringent leak rate requirements. By adding "**–585**" and the designator letter "**A**", "**B**" or "**C**"—depending on the hermeticity desired—to the end of a standard part number, connectors will be built to exceed the standard 1 x 10^{-7} cc Helium per second leak rate specified on most Glenair hermetics.

HERMETIC LEAK RATE MOD CODES	
Designator	**Required Leak Rate**
A	1 x 10^{-10} cc's Helium per second
B	1 x 10^{-9} cc's Helium per second
C	1 x 10^{-8} cc's Helium per second

Catalog Notes

For all parts in this catalog:

- All parts will be identified with manufacturer's name and part number, space permitting.
- Glenair 600 series backshell assembly tools are recommended for assembly and installation.
- Dimensions are subject to change without notice. Metric dimensions appear in parentheses in diagrams and tables, based on 1 inch = 25.4 mm, for reference only. Unless otherwise specified, the following other dimensional tolerances apply:

  .xx = ± .03 (0.8) Lengths = ± .060 (1.52)

  .xxx = ± .015 (0.4) Angles = ± 5°

Customers are advised to consult the factory for the latest specifications, particularly to confirm critical dimensions such as connector lengths, threads, and so on. When errors or mistakes are brought to our attention, corrected content is posted immediately to www.glenair.com.

© 2013 Glenair, Inc.

Glenair Hermetic Connector Products Space Grade Mod Codes

What is outgassing?

Plastic and rubber materials give off gaseous molecules. For example, the smell inside a new car is caused by polymer outgassing. Heat and vacuum increase the rate of diffusion. In a spacecraft the gases coming off polymers can contaminate optical surfaces and instruments. The result is degraded performance.

How is outgassing measured?

The space industry has adopted a standardized test procedure, ***ASTM E 595***, to evaluate out-gassing properties of polymers. Small samples of material are heated to 125° C. at a vacuum of 5 X 10^{-5} torr for 24 hours. Then the sample is weighed to calculate the ***Total Mass Loss*** (TML). The TML cannot exceed 1.00% of the total initial mass. During the test, outgassed matter condenses on a cooled collector plate. The quantity of outgassed matter is caluclated to determine the ***Collected Volatile Condensable Material*** (CVCM). The CVCM cannot exceed 0.10% of the original specimen mass.

What is NASA screening?

NASA specification EEE-INST-002 provides instructions on selecting, screening and qualifying parts for use on NASA GSFC space flight projects.

What screening level is required?

NASA defines three levels of screening: level 1 for highest reliability, level 2 for high reliability, and level 3 for standard reliability. Level 3 equates to standard lot acceptance inspection. Levels 1 and 2 call for additional testing.

HOW TO ORDER SPACE GRADE CONNECTORS

Step 1: Find a Standard Part Number

Electroless nickel plated shells are preferred for space flight. Cadmium plating is prohibited.

Step 2: Select a NASA Screening Level

The term "Screening Level" refers to the final inspection procedure.

Level 1 for mission-critical highest reliability
Level 2 for high reliability
Level 3 for standard reliability

Step 3: Choose Outgassing Processing

A detailed explanation of outgassing is on the following pages. The fluorosilicone rubber seals commonly used on aerospace-grade connectors such as MIL-DTL-38999 and Series 79 connectors, along with certain bonding agents and inks, do not meet NASA outgassing requirements unless the connector is specially processed. Glenair outgassing tests have shown oven baking or thermal vacuum outgassing processing are sufficient to reduce outgassing levels to NASA standards. Oven baking is more economical than thermal vacuum outgassing.

Step 4: Select the Mod 429 Code that Matches the Desired Level of Screening and Outgassing

Use the following table to choose the right modification code. Add the mod code to the connector part number. Example: 790-024PC-13ML-***429C***

NASA SCREENING LEVELS AND MODIFICATION CODES

NASA Screening Level	Special Screening Only	Special Screening Plus Outgassing Processing	
		8 Hour Oven Bake 400° F.	Thermal Vacuum Outgassing 24 hrs. 125° C.
Level 1 Highest Reliability	Mod 429B	Mod 429J	Mod 429C
Level 2 High Reliability	Mod 429	Mod 429K	Mod 429A
Level 3 Standard Reliability	(Use standard part number)	Mod 186	Mod 186M

© 2013 Glenair, Inc.

230-014
MIL-DTL-26482 Series I Type Hermetic
Bayonet Coupling Solder Mount Receptacle
MS3113 Type

230	-	014	Z1	10	-	6	P	X

Series 230 MIL-DTL-26482 Type

Connector Style
014 = Hermetic Solder Mount Receptacle

Material/Finish
Z1 = Stainless Steel/ Passivated
FT = C1215 Stainless Steel/Tin Plated
(See Note 2)

Shell Size

Insert Arrangement
Per MIL-STD-1669

Contact Type
P = Solder Cup, Pin Face
X = Eyelet, Pin Face
S = Socket, Solder Cup
Z = Socket, Eyelet

Alternate Key Position
W, X, Y or Z
(Omit for Normal)

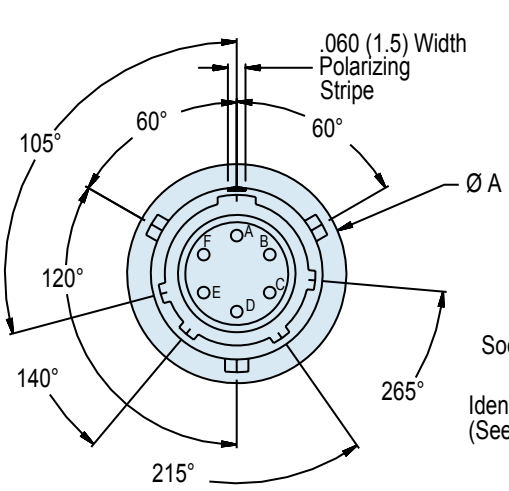

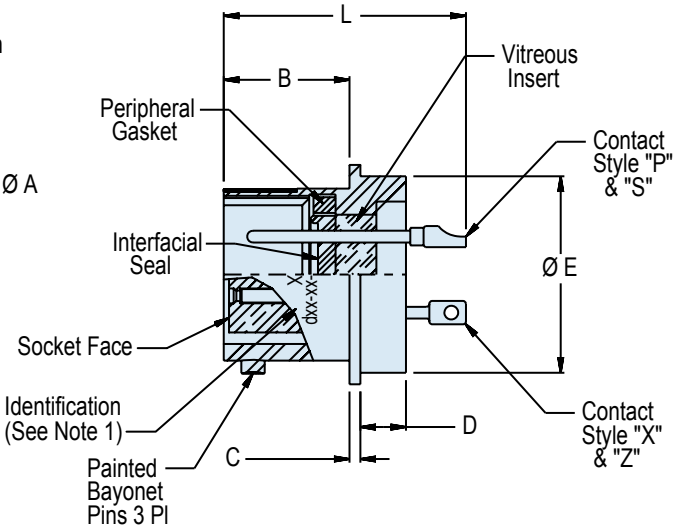

APPLICATION NOTES

1. To be identified with manufacturer's name, part number and date code, space permitting.
2. Material/Finish:
   Shell: Z1 - 304L stainless steel/passivate.
   FT - C1215 stainless steel/tin plated.
   Titanium and Inconel® available. Consult factory.
   Contacts - 52 Nickel alloy/gold plate.
   Sockets - Copper alloy, gold plated.
   Bayonets - Stainless steel/passivate.
   Seals - Silicone elastomer/N.A.
   Insulation - Glass/N.A.; Socket: Rigid Dielectric/N.A.
3. Contact current rating - #20-7.5 Amps, #16-10 Amps, #12-17 Amps, #8-35 Amps.
4. Consult factory and/or MIL-STD-1669 for arrangement and insert position options.
5. Glenair 230-014 will mate with any QPL MIL-DTL-26482 Series I bayonet coupling plug of same size and insert polarization.
6. Performance:
   Hermeticity - <1 x 10^{-7} cc/sec @ 1 atm differential.
   Dielectric withstanding voltage - Consult factory or MIL-STD-1669.
   Insulation resistance - 5000 megohms min @500VDC.
7. Metric Dimensions (mm) are indicated in parentheses.

© 2013 Glenair, Inc.

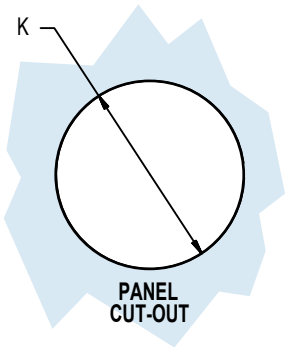

TABLE I: CONNECTOR AND CUT-OUT DIMENSIONS								
Shell Size	A Dia ± .016 (0.4)	B Dim +.031 (0.8) -000	C Dim +.016 (0.4) -.005 (0.1)	D Max Length of Mtg Diameter E Pin	Socket	E Dia +.001 (.0) -.005 (0.1)	L Max Length Overall Pin	Socket
8	.625 (15.9)	.411 (10.4)	.031 (0.79)	.156 (4.0)	.215 (5.5)	.562 (14.3)	.828 (21.0)	.888 (22.6)
10	.750 (19.1)	.411 (10.4)	.031 (0.79)	.156 (4.0)	.215 (5.5)	.672 (17.1)	.828 (21.0)	.888 (22.6)
12	.844 (21.4)	.411 (10.4)	.031 (0.79)	.156 (4.0)	.215 (5.5)	.781 (19.8)	.828 (21.0)	.888 (22.6)
14	.969 (23.7)	.411 (10.4)	.031 (0.79)	.156 (4.0)	.215 (5.5)	.906 (23.0)	.828 (21.0)	.888 (22.6)
16	1.094 (27.8)	.411 (10.4)	.031 (0.79)	.156 (4.0)	.215 (5.5)	1.031 (26.2)	.828 (21.0)	.888 (22.6)
18	1.218 (30.9)	.411 (10.4)	.031 (0.79)	.156 (4.0)	.215 (5.5)	1.156 (29.4)	.828 (21.0)	.960 (24.4)
20	1.312 (33.3)	.473 (12.0)	.031 (0.79)	.156 (4.0)	.275 (7.0)	1.250 (31.8)	.891 (22.6)	.995 (25.3)
22	1.438 (36.5)	.473 (12.0)	.031 (0.79)	.188 (4.8)	.275 (7.0)	1.375 (34.9)	.921 (23.4)	.995 (25.3)
24	1.563 (39.7)	.506 (12.9)	.031 (0.79)	.188 (4.8)	.275 (7.0)	1.500 (38.1)	.921 (23.4)	.995 (25.3)

HERMETIC LEAK RATE MOD CODES	
Designator	Required Leak Rate
–585A	1 x 10^{-10} cc Helium per second
–585B	1 x 10^{-9} cc Helium per second
–585C	1 x 10^{-8} cc Helium per second

© 2013 Glenair, Inc.

230-015
MIL-DTL-26482 Series I Type Hermetic
Bayonet Coupling Jam Nut Receptacle
MS3114 Type

Connector Style
015 = Hermetic Jam-Nut Mount Receptacle

Insert Arrangement
Per MIL-STD-1669

Alternate Key Position
W, X, Y or Z
(Omit for Normal)

230	-	015	Z1	10	-	6	P	X

Series 230 MIL-DTL-26482 Type

Material/Finish
Z1 = Stainless Steel/ Passivated
FT = C1215 Stainless Steel/Tin Plated
(See Note 2)

Shell Size

Contact Type
P = Solder Cup, Pin Face
X = Eyelet, Pin Face
C = Pin, Feedthrough
S = Solder Cup, Socket Face
Z = Eyelet, Socket Face
D = Socket, Feedthrough

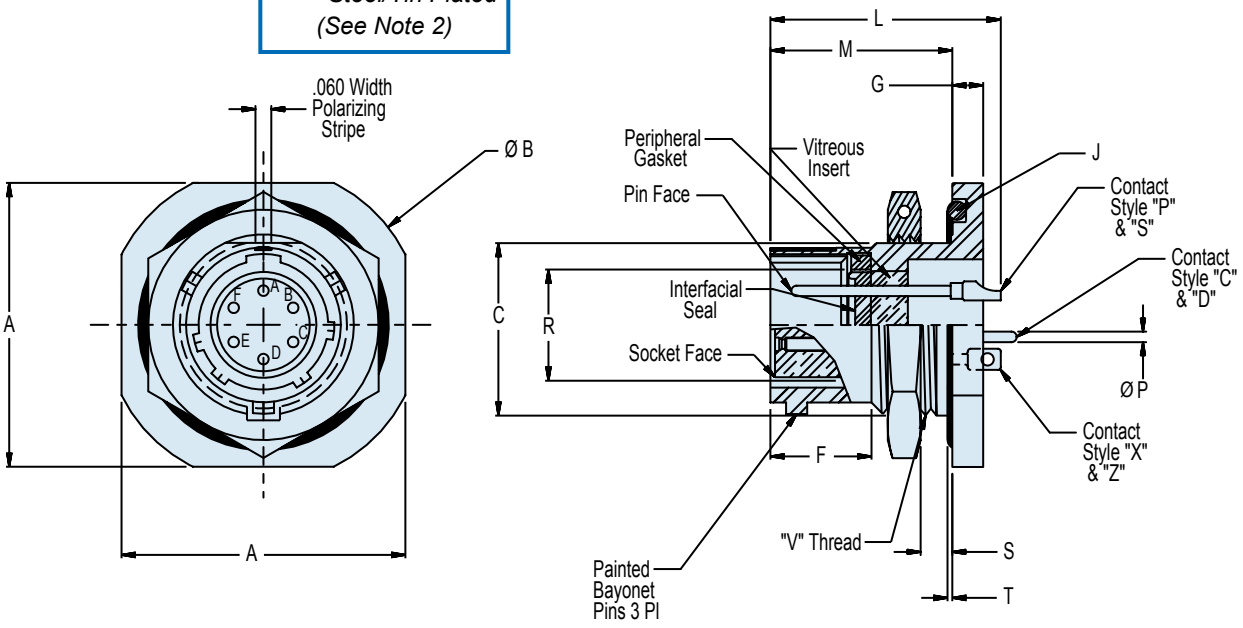

APPLICATION NOTES

1. To be identified with manufacturer's name, part number and date code, space permitting.
2. Material/Finish:
   Shell and Jam Nut: Z1 - 304L stainless steel/passivate.
   FT - C1215 stainless steel/tin plated.
   Titanium and Inconel® available. Consult factory.
   Contacts - 52 Nickel alloy/gold plate.
   Bayonets - Stainless steel/passivate.
   Seals - Silicone elastomer/N.A.
   Insulation - Glass/N.A.
3. Contact current rating - #20-7.5 Amps, #16-10 Amps, #12-17 Amps, #8-35 Amps.
4. Consult factory and/or MIL-STD-1669 for arrangement and insert position options.
5. Glenair 230-015 will mate with any QPL MIL-DTL-26482 Series I bayonet coupling plug of same size and insert polarization.
6. Performance:
   Hermeticity - <1 x 10^{-7} cc/sec @ 1 atmosphere differential.
   Dielectric withstanding voltage - Consult factory or MIL-STD-1669.
   Insulation resistance - 5000 megohms min @500VDC.
7. Consult factory for feedthrough contact footprints.
8. Metric Dimensions (mm) are indicated in parentheses.

© 2013 Glenair, Inc.

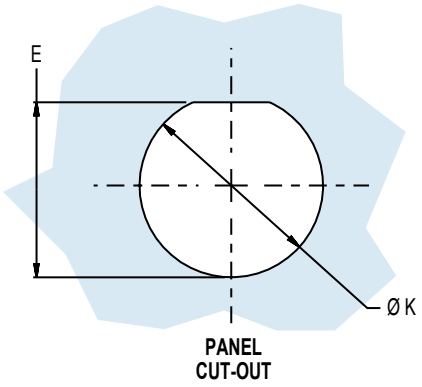

TABLE II	
Contact Size	Ø P
22D	.011 .015
20	.024 .028
16	.0635 .0615
12	.095 .093

HERMETIC LEAK RATE MOD CODES	
Designator	Required Leak Rate
–585A	1 x 10^{-10} cc Helium per second
–585B	1 x 10^{-9} cc Helium per second
–585C	1 x 10^{-8} cc Helium per second

TABLE I: CONNECTOR AND CUT-OUT DIMENSIONS (Continued Below)

Shell Size	A Max	B Dia +.000 -032 (0.8)	C Flat +.000 -.010 (0.3)	E +.010 -.005 (.13) Panel Flat Location	F Min	G ± .020 (0.5)	J O-Ring Seal MS29513-
8	.954 (24.2)	1.078 (27.4)	.530 (13.5)	.540 (13.72)	.384 (9.8)	.117 (3.0)	17
10	1.078 (27.4)	1.203 (30.6)	.665 (16.8)	.665 (16.76)	.384 (9.8)	.117 (3.0)	19
12	1.266 (32.2)	1.319 (33.5)	.818 (20.8)	.828 (21.03)	.384 (9.8)	.117 (3.0)	22
14	1.391 (35.3)	1.516 (38.5)	.942 (23.9)	.952 (24.18)	.384 (9.8)	.117 (3.0)	24
16	1.516 (38.5)	1.641 (41.7)	1.062 (27.0)	1.076 (27.33)	.384 (9.8)	.117 (3.0)	26
18	1.641 (41.7)	1.766 (44.9)	1.191 (30.3)	1.201 (30.51)	.384 (9.8)	.117 (3.0)	28
20	1.812 (46.0)	1.953 (49.6)	1.316 (33.4)	1.326 (33.68)	.446 (11.3)	.148 (3.8)	128
22	1.954 (49.6)	2.078 (52.8)	1.441 (36.6)	1.451 (36.86)	.446 (11.3)	.148 (3.8)	130
24	2.078 (52.8)	2.203 (56.0)	1.566 (39.8)	1.576 (40.03)	.479 (12.2)	.148 (3.8)	132

TABLE I (Continued): CONNECTOR AND CUT-OUT DIMENSIONS

Shell Size	K DIA +.010 -.005 (.13) Panel Mounting Hole	L Max	M +.031 (0.8) -.000	R Max	S Panel Thickness		T O-Ring .011 (0.3)	V Thread UNEF-2A
					Min	Max		
8	.572 (14.53)	.875 (22.2)	.691 (17.6)	.329	.062 (1.6)	.125 (3.2)	.023 (0.6)	.5625-24
10	.697 (17.70)	.875 (22.2)	.691 (17.6)	.477	.062 (1.6)	.125 (3.2)	.023 (0.6)	.685-24
12	.885 (22.48)	.875 (22.2)	.691 (17.6)	.564	.062 (1.6)	.125 (3.2)	.023 (0.6)	.875-20
14	1.010 (25.65)	.875 (22.2)	.691 (17.6)	.689	.062 (1.6)	.125 (3.2)	.023 (0.6)	1.000-20
16	1.135 (28.83)	.875 (22.2)	.691 (17.6)	.814	.062 (1.6)	.125 (3.2)	.023 (0.6)	1.125-18
18	1.260 (32.00)	.875 (22.2)	.691 (17.6)	.907	.062 (1.6)	.125 (3.2)	.023 (0.6)	1.250-18
20	1.385 (35.18)	1.094 (27.8)	.879 (22.3)	1.039	.062 (1.6)	.250 (6.4)	.028 (0.7)	1.375-18
22	1.510 (38.35)	1.094 (27.8)	.879 (22.3)	1.164	.062 (1.6)	.250 (6.4)	.028 (0.7)	1.500-18
24	1.635 (41.53)	1.125 (28.6)	.912 (23.2)	1.289	.062 (1.6)	.250 (6.4)	.028 (0.7)	1.625-18

© 2013 Glenair, Inc.

947-303
Narrow Flange Mount Bulkhead Feed-Thru
MS3440 Type

Basic Part Number		Insert Arrangement *Per MIL-STD-1669*		Alternate Key Position *W, X, Y or Z* *(Omit for Normal)*
947-303	-	16	- 26	Y
		Shell Size		

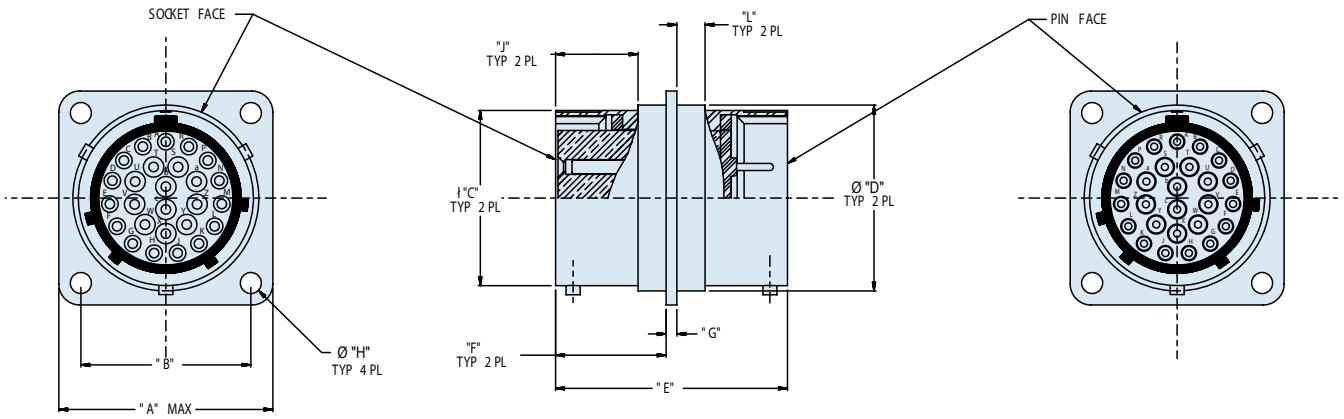

APPLICATION NOTES

1. To be identified with manufacturer's name, part number and date code, space permitting.
2. Material/Finish:
   Shell: 300 CRES / passivate
   Titanium and Inconel® available. Consult factory.
   Contacts, Pin - Nickel alloy / gold plate
   Contacts, Socket - Copper alloy / gold plate
   Hoods, Sockets - 300 series CRES / passivate
   Bayonets - 300 series CRES / passivate
   Insulator - full glass / N.A.
   Insulator, Socket - high grade dielectric / N.A.
   Seals - Silicone elastomer / N.A.
3. Glenair 947-303 will meet all performance requirements of MIL-DTL-26482
4. Consult factory and/or MIL-STD-1669 for arrangement and insert position options.
5. Glenair 947-303 will mate with any QPL manufacturer's MIL-DTL-26482 Series I or II plug with same shell size, arrangement and polarization, having opposite contact gender
6. Glenair 947-303 is symmetrical on both sides of flange. There is no need to specify pin or sockets on one end.
7. Metric Dimensions (mm) are indicated in parentheses.

© 2013 Glenair, Inc.

TABLE I: CONNECTOR AND CUT-OUT DIMENSIONS (Continued Below)								
Shell Size	A	B	C Dia	D Dia ± .010	E Max	F	G	H
8	.828 (21.03)	.594 (15.1)	.474 (12.0) .468 (11.9)	.533 (13.5)	1.362 (34.6)	.692 (17.6) .672 (17.1)	.078 (2.0) .046 (1.2)	.120 (3.0)
10	.954 (24.2)	.719 (18.3)	.591 (15.0) .585 (14.9)	.650 (16.5)	1.362 (34.6)	.692 (17.6) .672 (17.1)	.078 (2.0) .046 (1.2)	.120 (3.0)
12	1.047 (26.6)	.812 (20.6)	.751 (19.1) .745 (18.9)	.810 (20.6)	1.362 (34.6)	.692 (17.6) .672 (17.1)	.078 (2.0) .046 (1.2)	.120 (3.0)
14	1.141 (29.0)	.906 (23.0)	.876 (22.3) .870 (22.1)	.935 (23.7)	1.362 (34.6)	.692 (17.6) .672 (17.1)	.078 (2.0) .046 (1.2)	.120 (3.0)
16	1.234 (31.3)	.969 (24.6)	1.001 (25.4) .995 (25.3)	1.060 (26.9)	1.362 (34.6)	.692 (17.6) .672 (17.1)	.078 (2.0) .046 (1.2)	.120 (3.0)
18	1.328 (33.7)	1.062 (27.0)	1.126 (28.6) 1.120 (28.4)	1.185 (30.1)	1.362 (34.6)	.692 (17.6) .672 (17.1)	.078 (2.0) .046 (1.2)	.120 (3.0)
20	1.453 (36.9)	1.156 (29.4)	1.251 (31.8) 1.245 (31.6)	1.310 (33.3)	1.506 (38.3)	.698 (17.7) .678 (17.2)	.110 (2.8) .078 (2.0)	.120 (3.0)
22	1.578 (40.1)	1.250 (31.8)	1.376 (35.0) 1.371 (34.8)	1.435 (36.4)	1.506 (38.3)	.698 (17.7) .678 (17.2)	.110 (2.8) .078 (2.0)	.120 (3.0)
24	1.703 (43.3)	1.375 (34.9)	1.501 (38.1) 1.495 (38.0)	1.560 (39.4)	1.506 (38.3)	.698 (17.7) .678 (17.2)	.110 (2.8) .078 (2.0)	.147 (3.7)

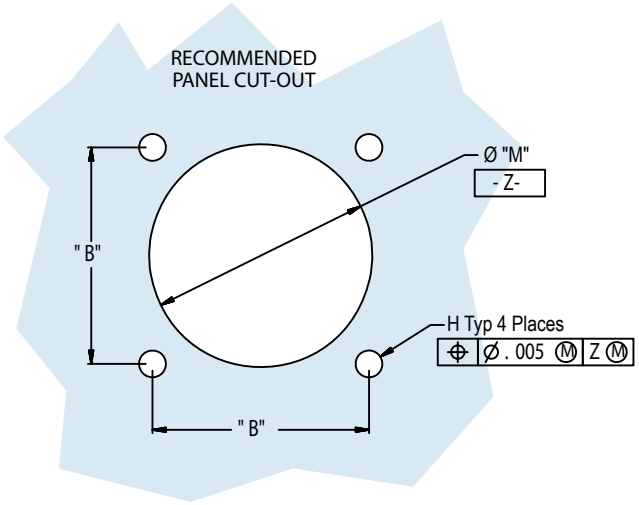

HERMETIC LEAK RATE MOD CODES	
Designator	Required Leak Rate
–585A	1 x 10^{-10} cc Helium per second
–585B	1 x 10^{-9} cc Helium per second
–585C	1 x 10^{-8} cc Helium per second

TABLE I (Continued)			
Shell Size	J Minimum	L	M Dia. ± .005
8	.460 (11.7)	.212 (5.4)	.570 (14.5)
10	.460 (11.7)	.212 (5.4)	.680 (17.3)
12	.460 (11.7)	.212 (5.4)	.789 (20.0)
14	.460 (11.7)	.212 (5.4)	.914 (23.2)
16	.460 (11.7)	.212 (5.4)	1.039 (26.4)
18	.460 (11.7)	.212 (5.4)	1.164 (29.6)
20	.428 (10.9)	.250 (6.4)	1.258 (32.0)
22	.428 (10.9)	.250 (6.4)	1.383 (35.1)
24	.428 (10.9)	.250 (6.4)	1.508 (38.3)

© 2013 Glenair, Inc.

230-035
MIL-DTL-26482 Series I Type Hermetic
Bayonet Coupling Narrow Flange Mount Receptacle
MS3112 Type

Connector Style	Insert Arrangement	Alternate Key Position
035 = Narrow Flange Mount Receptacle	*Per MIL-STD-1669*	*W, X, Y or Z (Omit for Normal)*

230 - 035 FT 10 - 6 P X

Series 230 MIL-DTL-26482 Type

Material/Finish
- *Z1 = Stainless Steel/ Passivated*
- *FT = C1215 Stainless Steel/Tin Plated*

(See Note 2)

Shell Size

Contact Type
- *P = Solder Cup, Pin Face*
- *S = Solder Cup, Socket Face*
- *X = Eyelet, Pin Face*
- *Z = Eyelet, Socket Face*

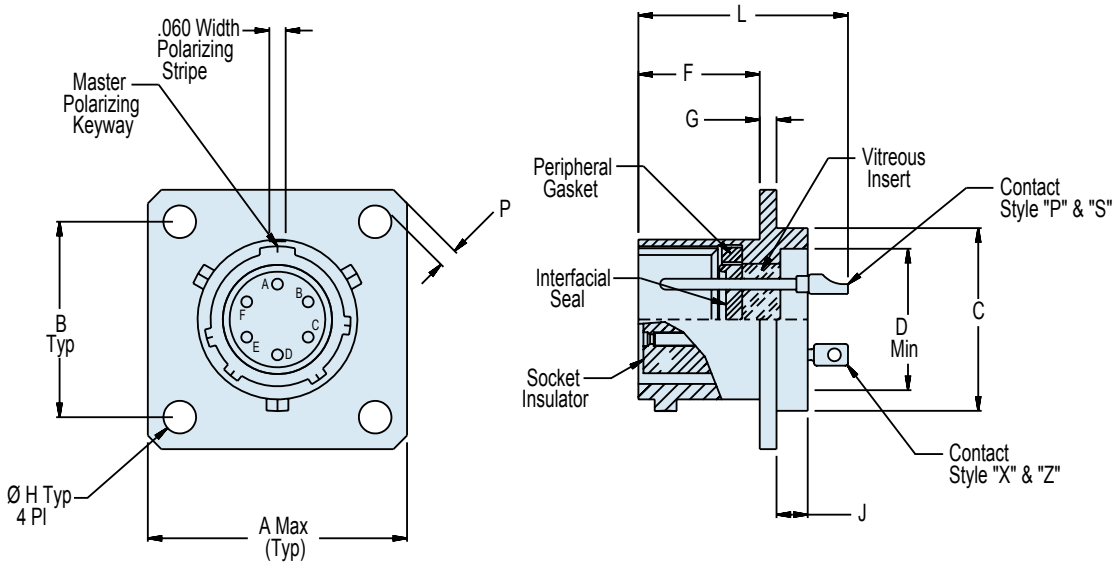

APPLICATION NOTES

1. To be identified with manufacturer's name, part number and date code, space permitting.
2. Material/Finish:
   Shell: Z1 - 304L stainless steel/passivate.
   FT - C1215 stainless steel/tin plated.
   Titanium and Inconel® available. Consult factory.
   Contacts - 52 Nickel alloy/gold plate.
   Bayonets - Stainless steel/passivate.
   Seals - Silicone elastomer/N.A.
   Insulation - Glass/N.A.
   Socket insulator - Rigid dielectric/N.A.
   Socket Contacts - Copper alloy/gold plated.
3. Glenair 230-035 will mate with any QPL MIL-DTL-26482 Series I bayonet coupling plug of same size and insert polarization.
4. Performance:
   Hermeticity - <1 x 10^{-7} cc/sec @ 1 atmosphere differential.
   Dielectric withstanding voltage - Consult factory or MIL-STD-1669.
   Insulation resistance - 5000 megohms min @500VDC.
5. Consult factory or MIL-STD-1669 for arrangement and insert position options.
6. Metric Dimensions (mm) are indicated in parentheses.

© 2013 Glenair, Inc.

HERMETIC LEAK RATE MOD CODES	
Designator	**Required Leak Rate**
–585A	1 x 10^{-10} cc Helium per second
–585B	1 x 10^{-9} cc Helium per second
–585C	1 x 10^{-8} cc Helium per second

TABLE I: CONNECTOR AND CUT-OUT DIMENSIONS

Shell Size	A Max Length	B Mounting Holes ℄ to ℄	C Dia Mounting Locator	D Dia Min	F Mounting Flange Location	G Flange Thickness	J Max	L Max Overall Length	P Min Edge Distance
8	.828 (21.0)	.594 (15.1)	.469/.422 (11.9/10.7)	.403 (10.2)	.462/.431 (11.7/10.9)	.078/.046 (2.0/1.2)	.354 (9.0)	.978 (24.8)	.035 (0.89)
10	.954 (24.2)	.719 (18.3)	.593/.546 (15.1/13.9)	.515 (13.1)	.462/.431 (11.7/10.9)	.078/.046 (2.0/1.2)	.354 (9.0)	.978 (24.8)	.035 (0.89)
12	1.047 (26.6)	.812 (20.6)	.719/.672 (18.3/17.1)	.630 (16.0)	.462/.431 (11.7/10.9)	.078/.046 (2.0/1.2)	.354 (9.0)	.978 (24.8)	.035 (0.89)
14	1.141 (29.0)	.906 (23.0)	.843/.796 (21.4/20.2)	.755 (19.2)	.462/.431 (11.7/10.9)	.078/.046 (2.0/1.2)	.354 (9.0)	.978 (24.8)	.035 (0.89)
16	1.234 (31.3)	.969 (24.6)	.969/.922 (24.6/23.4)	.880 (22.4)	.462/.431 (11.7/10.9)	.078/.046 (2.0/1.2)	.354 (9.0)	.978 (24.8)	.035 (0.89)
18	1.328 (33.7)	1.062 (27.0)	1.093/1.046 (27.8/26.6)	.980 (24.9)	.462/.431 (11.7/10.9)	.078/.046 (2.0/1.2)	.354 (9.0)	.978 (24.8)	.035 (0.89)
20	1.453 (36.9)	1.156 (29.4)	1.219/1.172 (31.0/29.8)	1.105 (28.1)	.587/.556 (14.9/14.1)	.110/.078 (2.8/2.0)	.417 (10.6)	1.196 (29.9)	.050 (1.27)
22	1.578 (40.1)	1.250 (31.8)	1.343/1.296 (34.1/32.9)	1.230 (31.2)	.587/.556 (14.9/14.1)	.110/.078 (2.8/2.0)	.417 (10.6)	1.196 (29.9)	.050 (1.27)
24	1.703 (43.3)	1.375 (34.9)	1.469/1.422 (37.3/36.1)	1.385 (35.2)	.587/.556 (14.9/14.1)	.110/.078 (2.8/2.0)	.445 (11.3)	1.196 (29.9)	.050 (1.27)

© 2013 Glenair, Inc.

230-016
MIL-DTL-26482 Series II Type Hermetic
Bayonet Coupling Narrow Flange Mount Receptacle
MS3440 Type

Connector Style
016 = Hermetic Narrow Flange Mount Receptacle

Insert Arrangement
Per MIL-STD-1669

Alternate Key Position
W, X, Y or Z
(Omit for Normal)

230	-	016	FT	10	-	6	P	X

Series 230 MIL-DTL-26482 Type

Material/Finish
Z1 = Stainless Steel/ Passivated
FT = C1215 Stainless Steel/Tin Plated
(See Note 2)

Shell Size

Contact Type
P = Solder Cup, Pin Face
X = Eyelet, Pin Face
S = Socket, Solder Cup
Z = Socket, Eyelet

HERMETIC LEAK RATE MOD CODES	
Designator	**Required Leak Rate**
–585A	1 x 10^{-10} cc Helium per second
–585B	1 x 10^{-9} cc Helium per second
–585C	1 x 10^{-8} cc Helium per second

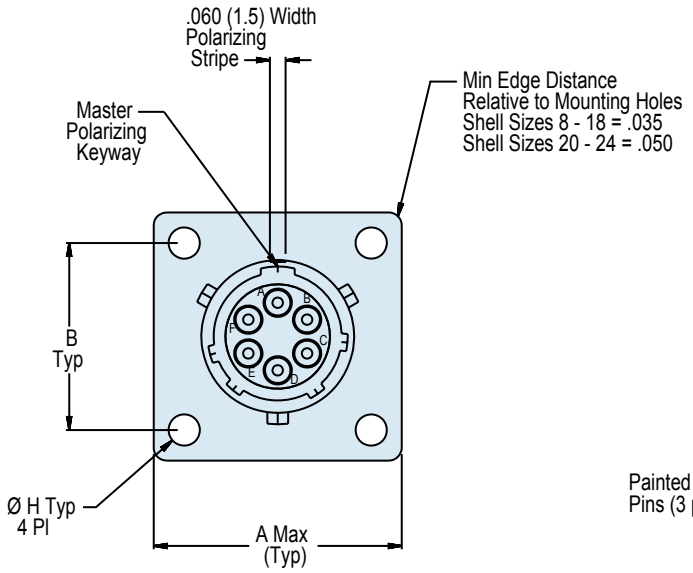

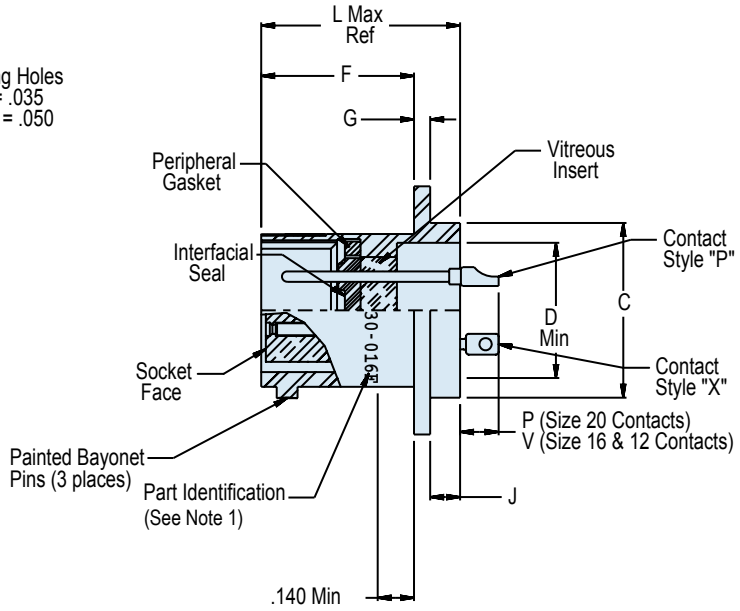

APPLICATION NOTES

1. To be identified with manufacturer's name, part number and date code, space permitting.
2. Material/Finish:
   Shell: Z1 - 304L stainless steel/passivate.
   FT - C1215 stainless steel/tin plated.
   Titanium and Inconel® available. Consult factory.
   Contacts - 52 Nickel alloy/gold plate.
   Sockets - Copper alloy, gold plated.
   Bayonets - Stainless steel/passivate.
   Seals - Silicone elastomer/N.A.
   Insulation - Glass/N.A.; Socket: Rigid dielectric/N.A.
3. Consult factory and/or MIL-STD-1669 for arrangement and insert position options.
4. Glenair 230-016 will mate with any QPL MIL-DTL-26482 Series II bayonet coupling plug of same size and insert polarization.
5. Performance:
   Hermeticity - <1 x 10^{-7} cc/sec @ 1 atm differential.
   Dielectric withstanding voltage - Consult factory or MIL-STD-1669.
   Insulation resistance - 5000 megohms min @500VDC.
6. Metric Dimensions (mm) are indicated in parentheses.

© 2013 Glenair, Inc.

TABLE I: CONNECTOR AND CUT-OUT DIMENSIONS (Continued Below)							
Shell Size	A	B	C Dia Mounting Locator	D Dia Min	F	G	H
8	.828 (21.03)	.594 (15.1)	.563/.557 (14.3/14.1)	.403 (10.2)	.598/.578 (15.2/14.7)	.078/.04 (2.0/1.0)	.120 (3.0)
10	.954 (24.2)	.719 (18.3)	.673/.667 (17.1/16.9)	.515 (13.1)	.598/.578 (15.2/14.7)	.078/.04 (2.0/1.0)	.120 (3.0)
12	1.047 (26.6)	.812 (20.6)	.782/.776 (19.9/19.7)	.630 (16.0)	.598/.578 (15.2/14.7)	.078/.04 (2.0/1.0)	.120 (3.0)
14	1.141 (29.0)	.906 (23.0)	.907/.901 (23.0/22.9)	.755 (19.2)	.598/.578 (15.2/14.7)	.078/.04 (2.0/1.0)	.120 (3.0)
16	1.234 (31.3)	.969 (24.6)	1.032/1.026 (26.2/26.1)	.880 (22.4)	.598/.578 (15.2/14.7)	.078/.04 (2.0/1.0)	.120 (3.0)
18	1.328 (33.7)	1.062 (27.0)	1.157/1.151 (29.4/29.2)	.980 (24.9)	.598/.578 (15.2/14.7)	.078/.04 (2.0/1.0)	.120 (3.0)
20	1.453 (36.9)	1.156 (29.4)	1.251/1.245 (31.8/31.6)	1.105 (28.1)	.660/.640 (16.8/16.3)	.110/.078 (2.8/2.0)	.120 (3.0)
22	1.578 (40.1)	1.250 (31.8)	1.376/1.371 (35.0/34.8)	1.230 (31.2)	.660/.640 (16.8/16.3)	.110/.078 (2.8/2.0)	.120 (3.0)
24	1.703 (43.3)	1.375 (34.9)	1.501/1.495 (38.1/38.0)	1.385 (35.2)	.660/.640 (16.8/16.3)	.110/.078 (2.8/2.0)	.147 (3.7)

TABLE I (Continued): CONNECTOR AND CUT-OUT DIMENSIONS						
Shell Size	J	L	P	V	Panel Cut-Out Dia	Max. Weight (Lbs)
8	.125/.105 (3.2/2.7)	.801 (20.3)	.178/.118 (4.5/3.0)	.248/.188 (6.3/4.8)	.570 (14.5)	.038
10	.125/.105 (3.2/2.7)	.801 (20.3)	.178/.118 (4.5/3.0)	.248/.188 (6.3/4.8)	.680 (17.3)	.044
12	.125/.105 (3.2/2.7)	.801 (20.3)	.178/.118 (4.5/3.0)	.248/.188 (6.3/4.8)	.789 (20.0)	.052
14	.125/.105 (3.2/2.7)	.801 (20.3)	.178/.118 (4.5/3.0)	.248/.188 (6.3/4.8)	.914 (23.2)	.070
16	.125/.105 (3.2/2.7)	.801 (20.3)	.178/.118 (4.5/3.0)	.248/.188 (6.3/4.8)	1.039 (26.4)	.085
18	.125/.105 (3.2/2.7)	.801 (20.3)	.178/.118 (4.5/3.0)	.248/.188 (6.3/4.8)	1.164 (29.6)	.098
20	.125/.105 (3.2/2.7)	.863 (21.9)	.178/.118 (4.5/3.0)	.248/.188 (6.3/4.8)	1.258 (32.0)	.110
22	.125/.105 (3.2/2.7)	.895 (22.7)	.146/.086 (3.7/2.2)	.216/.156 (5.5/4.0)	1.383 (35.1)	.150
24	.125/.105 (3.2/2.7)	.895 (22.7)	.146/.086 (3.7/2.2)	.216/.156 (5.5/4.0)	1.508 (38.3)	.280

© 2013 Glenair, Inc.

230-017
MIL-DTL-26482 Series II Type Hermetic
Bayonet Coupling Wide Flange Mount Receptacle
MS3442 Type

Connector Style
017 = Hermetic Wide Flange Mount Receptacle

Insert Arrangement
Per MIL-STD-1669

Alternate Key Position
W, X, Y or Z
(Omit for Normal)

230	-	017	FT	10	-	6	P	X

Series 230 MIL-DTL-26482 Type

Material/Finish
Z1 = Stainless Steel/ Passivated
FT = C1215 Stainless Steel/Tin Plated
(See Note 2)

Shell Size

Contact Type
P = Solder Cup, Pin Face
X = Eyelet, Pin Face
S = Socket, Solder Cup
Z = Socket, Eyelet

HERMETIC LEAK RATE MOD CODES	
Designator	**Required Leak Rate**
–585A	1 x 10^{-10} cc Helium per second
–585B	1 x 10^{-9} cc Helium per second
–585C	1 x 10^{-8} cc Helium per second

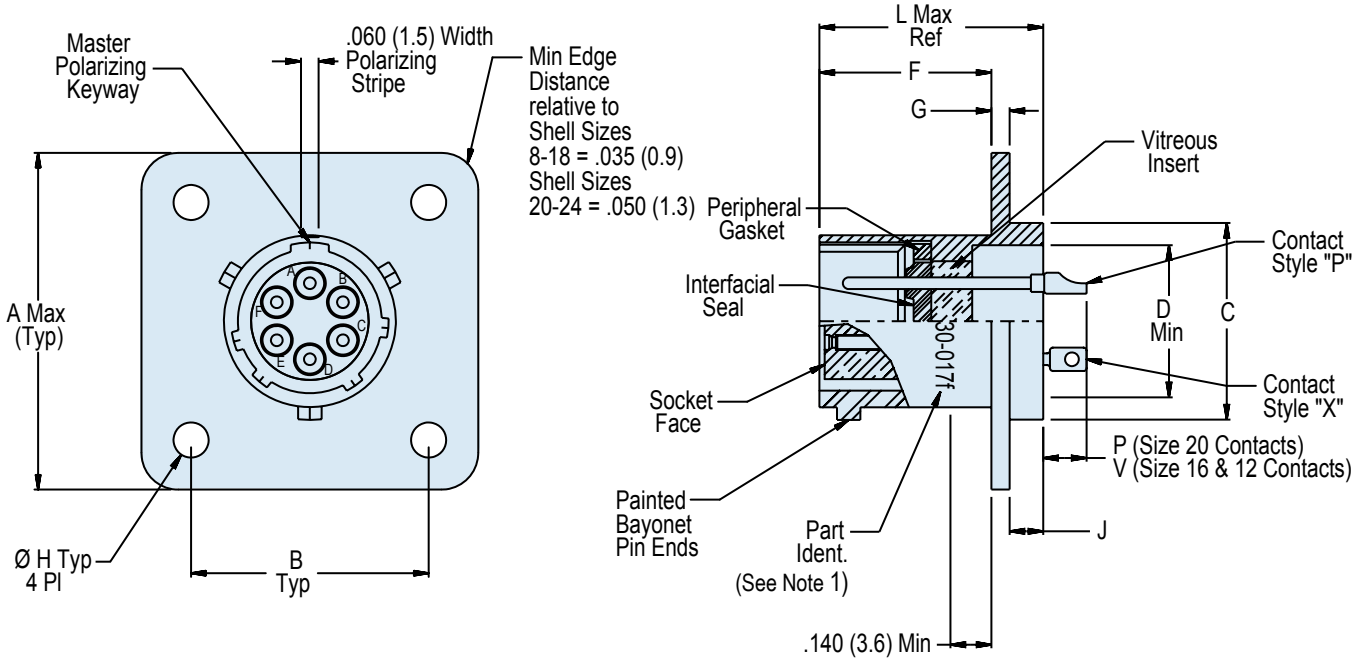

APPLICATION NOTES

1. To be identified with manufacturer's name, part number and date code, space permitting.
2. Material/Finish:
   Shell: Z1 - 304L stainless steel/passivate.
   FT - C1215 stainless steel/tin plated.
   Titanium and Inconel® available. Consult factory.
   Contacts - 52 Nickel alloy/gold plate.
   Sockets - Copper alloy, gold plated.
   Bayonets - Stainless steel/passivate.
   Seals - Silicone elastomer/N.A.
   Insulation - Glass/N.A.; Socket: Rigid dielectric/N.A.
3. Consult factory and/or MIL-STD-1669 for arrangement and insert position options.
4. Glenair 230-017 will mate with any QPL MIL-DTL-26482 Series II bayonet coupling plug of same size and insert polarization.
5. Performance:
   Hermeticity - <1 x 10^{-7} cc/sec @ 1 atm differential.
   Dielectric withstanding voltage - Consult factory or MIL-STD-1669.
   Insulation resistance - 5000 megohms min @500VDC.
6. Metric Dimensions (mm) are indicated in parentheses.

© 2013 Glenair, Inc.

TABLE I: CONNECTOR AND CUT-OUT DIMENSIONS (Continued Below)							
Shell Size	A	B	C Dia Mounting Locator	D Dia Min	F	G	H
8	1.065 (27.1)	.734 (18.6)	.563/.557 (14.3/14.1)	.403 (10.2)	.598/.578 (15.2/14.7)	.078/.046 (2.0/1.2)	.150 (3.8)
10	1.141 (29.0)	.812 (20.6)	.673/.667 (17.1/16.9)	.515 (13.1)	.598/.578 (15.2/14.7)	.078/.046 (2.0/1.2)	.150 (3.8)
12	1.266 (32.2)	.938 (23.8)	.782/.776 (19.9/19.7)	.630 (16.0)	.598/.578 (15.2/14.7)	.078/.046 (2.0/1.2)	.150 (3.8)
14	1.360 (34.5)	1.031 (26.2)	.907/.901 (23.0/22.9)	.755 (19.2)	.598/.578 (15.2/14.7)	.078/.046 (2.0/1.2)	.150 (3.8)
16	1.453 (36.9)	1.125 (28.6)	1.032/1.026 (26.2/26.1)	.880 (22.4)	.598/.578 (15.2/14.7)	.078/.046 (2.0/1.2)	.150 (3.8)
18	1.532 (38.9)	1.203 (30.6)	1.157/1.151 (29.4/29.2)	.980 (24.9)	.598/.578 (15.2/14.7)	.078/.046 (2.0/1.2)	.150 (3.8)
20	1.688 (42.9)	1.297 (32.9)	1.251/1.245 (31.8/31.6)	1.105 (28.1)	.660/.640 (16.8/16.3)	.110/.078 (2.8/2.0)	.150 (3.8)
22	1.766 (44.9)	1.375 (34.9)	1.376/1.371 (35.0/34.8)	1.230 (31.2)	.660/.640 (16.8/16.3)	.110/.078 (2.8/2.0)	.150 (3.8)
24	1.891 (48.0)	1.500 (38.1)	1.501/1.495 (38.1/38.0)	1.385 (35.2)	.660/.640 (16.8/16.3)	.110/.078 (2.8/2.0)	.150 (3.8)

TABLE I (Continued): CONNECTOR AND CUT-OUT DIMENSIONS					
Shell Size	J	L	P	V	Panel Cut-Out Dia
8	.125/.105 (3.2/2.7)	.801 (20.3)	.178/.118 (4.5/3.0)	.248/.188 (6.3/4.8)	.570 (14.5)
10	.125/.105 (3.2/2.7)	.801 (20.3)	.178/.118 (4.5/3.0)	.248/.188 (6.3/4.8)	.680 (17.3)
12	.125/.105 (3.2/2.7)	.801 (20.3)	.178/.118 (4.5/3.0)	.248/.188 (6.3/4.8)	.789 (20.0)
14	.125/.105 (3.2/2.7)	.801 (20.3)	.178/.118 (4.5/3.0)	.248/.188 (6.3/4.8)	.914 (23.2)
16	.125/.105 (3.2/2.7)	.801 (20.3)	.178/.118 (4.5/3.0)	.248/.188 (6.3/4.8)	1.039 (26.4)
18	.125/.105 (3.2/2.7)	.801 (20.3)	.178/.118 (4.5/3.0)	.248/.188 (6.3/4.8)	1.164 (29.6)
20	.125/.105 (3.2/2.7)	.863 (21.9)	.178/.118 (4.5/3.0)	.248/.188 (6.3/4.8)	1.258 (32.0)
22	.125/.105 (3.2/2.7)	.895 (22.7)	.146/.086 (3.7/2.2)	.216/.156 (5.5/4.0)	1.383 (35.1)
24	.125/.105 (3.2/2.7)	.895 (22.7)	.146/.086 (3.7/2.2)	.216/.156 (5.5/4.0)	1.508 (38.3)

© 2013 Glenair, Inc.

230-018
MIL-DTL-26482 Series II Type Hermetic
Bayonet Coupling Solder Flange Mount Receptacle
MS3443 Type

230	-	018	FT	10	-	6	P	X

Series 230 MIL-DTL-26482 Type

Connector Style
018 = Solder Flange Mount Hermetic Receptacle

Material/Finish
Z1 = Stainless Steel/ Passivated
ZL = Stainless Steel/ Nickel Plated
FT = C1215 Stainless Steel/Tin Plated
(See Note 2)

Shell Size

Insert Arrangement
Per MIL-STD-1669

Contact Type
P = Solder Cup, Pin Face
X = Eyelet, Pin Face
S = Socket, Solder Cup
Z = Socket, Eyelet

Alternate Key Position
W, X, Y or Z
(Omit for Normal)

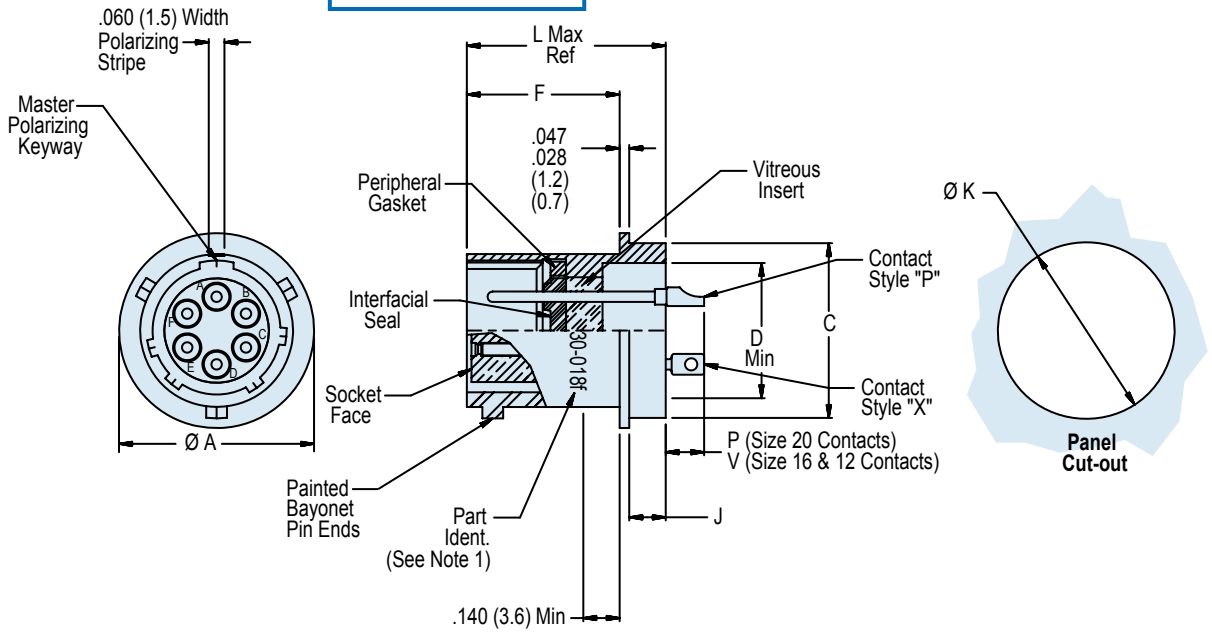

APPLICATION NOTES

1. To be identified with manufacturer's name, part number and date code, space permitting.
2. Material/Finish:
   Shell: Z1 - Stainless steel/passivate.
   ZL - Stainless steel/nickel plated.
   FT = C1215 Stainless *Steel/Tin Plated*
   Titanium and Inconel® available. Consult factory.
   Contacts - 52 Nickel alloy/gold plate.
   Sockets - Copper alloy, gold plated.
   Bayonets - Stainless steel/passivate.
   Seals - Silicone elastomer/N.A.
   Insulation - Glass/N.A.; Socket: Rigid Dielectric/N.A.
3. Consult factory and/or MIL-STD-1669 for arrangement and insert position options.
4. Glenair 230-018 will mate with any QPL MIL-DTL-26482 Series II bayonet coupling plug of same size and insert polarization.
5. Performance:
   Hermeticity - <1 x 10^{-7} cc/sec @ 1 atm differential.
   Dielectric withstanding voltage - Consult factory or MIL-STD-1669.
   Insulation resistance - 5000 megohms min @500VDC.
6. Metric Dimensions (mm) are indicated in parentheses.

© 2013 Glenair, Inc.
U.S. CAGE Code 06324
Printed in U.S.A.

HERMETIC LEAK RATE MOD CODES	
Designator	**Required Leak Rate**
–585A	1 x 10^{-10} cc Helium per second
–585B	1 x 10^{-9} cc Helium per second
–585C	1 x 10^{-8} cc Helium per second

TABLE I: CONNECTOR AND CUT-OUT DIMENSIONS

Shell Size	A Dia ± .010 (0.3)	C Dia Mounting Locator	D Dia Min	F	J	K	L	P	V	Max Weight (Lbs.)
8	.625 (15.9)	.563/.557 (14.3/14.1)	.403 (10.2)	.598/.578 (15.2/14.7)	.156/.116 (4.0/2.9)	.570 (14.5)	.801 (20.3)	.178/.118 (4.5/3.0)	.248/.188 (6.3/4.8)	.0310
10	.750 (19.1)	.673/.667 (17.1/16.9)	.515 (13.1)	.598/.578 (15.2/14.7)	.156/.116 (4.0/2.9)	.680 (17.3)	.801 (20.3)	.178/.118 (4.5/3.0)	.248/.188 (6.3/4.8)	.0340
12	.844 (21.4)	.782/.776 (19.9/19.7)	.630 (16.0)	.598/.578 (15.2/14.7)	.156/.116 (4.0/2.9)	.789 (20.0)	.801 (20.3)	.178/.118 (4.5/3.0)	.248/.188 (6.3/4.8)	.0400
14	.969 (24.6)	.907/.901 (23.0/22.9)	.755 (19.2)	.598/.578 (15.2/14.7)	.156/.116 (4.0/2.9)	.914 (23.2)	.801 (20.3)	.178/.118 (4.5/3.0)	.248/.188 (6.3/4.8)	.0510
16	1.094 (27.8)	1.032/1.026 (26.2/26.1)	.880 (22.4)	.598/.578 (15.2/14.7)	.156/.116 (4.0/2.9)	1.039 (26.4)	.801 (20.3)	.178/.118 (4.5/3.0)	.248/.188 (6.3/4.8)	.0620
18	1.218 (30.9)	1.157/1.151 (29.4/29.2)	.980 (24.9)	.598/.578 (15.2/14.7)	.156/.116 (4.0/2.9)	1.164 (29.6)	.801 (20.3)	.178/.118 (4.5/3.0)	.248/.188 (6.3/4.8)	.0820
20	1.312 (33.3)	1.251/1.245 (31.8/31.6)	1.105 (28.1)	.660/.640 (16.8/16.3)	.156/.116 (4.0/2.9)	1.258 (32.0)	.863 (21.9)	.178/.118 (4.5/3.0)	.248/.188 (6.3/4.8)	.1000
22	1.438 (36.5)	1.376/1.371 (35.0/34.8)	1.230 (31.2)	.660/.640 (16.8/16.3)	.188/.148 (4.8/3.8)	1.383 (35.1)	.895 (22.7)	.146/.086 (3.7/2.2)	.216/.156 (5.5/4.0)	.1150
24	1.564 (39.7)	1.501/1.495 (38.1/38.0)	1.385 (35.2)	.660/.640 (16.8/16.3)	.188/.148 (4.8/3.8)	1.508 (38.3)	.895 (22.7)	.146/.086 (3.7/2.2)	.216/.156 (5.5/4.0)	.2680

© 2013 Glenair, Inc.

230-019
MIL-DTL-26482 Series II Type Hermetic
Quick Release Bayonet Receptacle
Single Hole Jam-Nut Mount MS3449 Type

230 - 019 FT 10 - 6 P X

Series 230 MIL-DTL-26482 Type

Connector Style
019 = Hermetic Jam-Nut Single Hole Mount Receptacle

Material/Finish
Z1 = Stainless Steel/ Passivated
FT = C1215 Stainless Steel/Tin Plated
(See Note 2)

Shell Size

Insert Arrangement
Per MIL-STD-1669

Contact Type
P = Solder Cup, Pin Face
X = Eyelet, Pin Face
S = Socket, Solder Cup
Z = Socket, Eyelet

Alternate Key Position
W, X, Y or Z
(Omit for Normal)

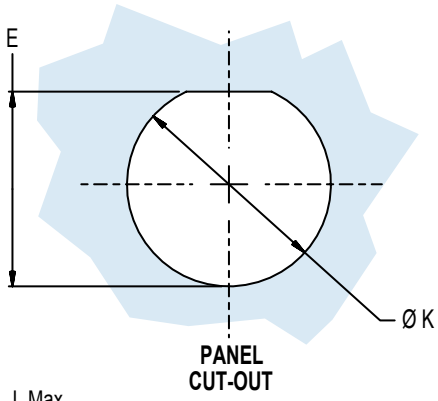

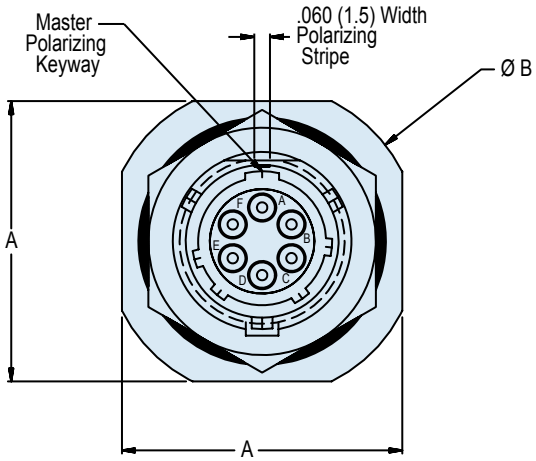

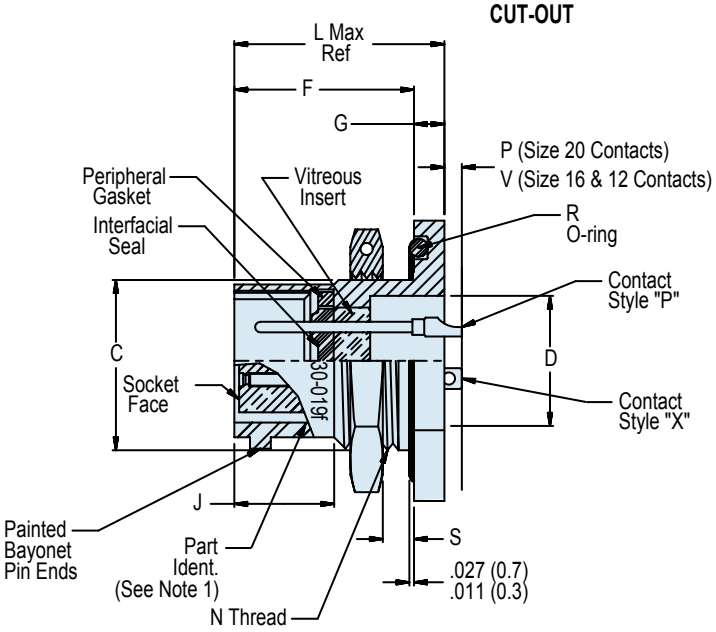

HERMETIC LEAK RATE MOD CODES	
Designator	**Required Leak Rate**
–585A	1 x 10^{-10} cc Helium per second
–585B	1 x 10^{-9} cc Helium per second
–585C	1 x 10^{-8} cc Helium per second

APPLICATION NOTES

1. To be identified with manufacturer's name, part number and date code, space permitting.
2. Material/Finish:
   Shell: Z1 - 304L stainless steel/passivate.
   FT - C1215 stainless steel/tin plated.
   Titanium and Inconel® available. Consult factory.
   Contacts - 52 Nickel alloy/gold plate.
   Sockets - Copper alloy, gold plated.
   Bayonets - Stainless steel/passivate.
   Seals - Silicone elastomer/N.A.
   Insulation - Glass/N.A.; Socket: Rigid dielectric/N.A.
3. Consult factory and/or MIL-STD-1669 for arrangement and insert position options.
4. Glenair 230-019 will mate with any QPL MIL-DTL-26482 Series II bayonet coupling plug of same size and insert polarization.
5. Performance:
   Hermeticity - <1 x 10^{-7} cc/sec @ 1 atm differential.
   Dielectric withstanding voltage - Consult factory or MIL-STD-1669.
   Insulation resistance - 5000 megohms min @500VDC.
6. Metric Dimensions (mm) are indicated in parentheses.

© 2013 Glenair, Inc.

TABLE I: CONNECTOR AND CUT-OUT DIMENSIONS (Continued Below)									
Shell Size	A Length + .000 - .031 (+0 -0.8)	B Dia + .000 - .031 (+0 -0.8) Across Flange Corner	C +.000 - .010 (+0 -0.3) Mounting Flat	D Dia Min	E Panel Flat Location	F Mounting Flange Location	G Mounting Flange Thickness	J To Thread Chamfer ± .010 (0.3)	K + .010 - .005 (+0.3 -0.1) Panel Mounting Hole
8	.954 (24.2)	1.078 (27.4)	.530 (13.5)	.403 (10.2)	.536 (13.6)	.707/.691 (18.0/17.6)	.113/.097 (2.9/2.5)	.368 (9.3)	.572 (14.5)
10	1.078 (27.4)	1.203 (30.6)	.655 (16.6)	.515 (13.1)	.661 (16.8)	.707/.691 (18.0/17.6)	.113/.097 (2.9/2.5)	.368 (9.3)	.697 (17.7)
12	1.266 (32.2)	1.391 (35.3)	.818 (20.8)	.630 (16.0)	.824 (20.9)	.707/.691 (18.0/17.6)	.113/.097 (2.9/2.5)	.368 (9.3)	.885 (22.5)
14	1.391 (35.3)	1.516 (38.5)	.942 (23.9)	.755 (19.2)	.948 (24.1)	.707/.691 (18.0/17.6)	.113/.097 (2.9/2.5)	.368 (9.3)	1.010 (25.7)
16	1.516 (38.5)	1.641 (41.7)	1.062 (27.0)	.880 (22.4)	1.072 (27.2)	.707/.691 (18.0/17.6)	.113/.097 (2.9/2.5))	.368 (9.3)	1.135 (28.8)
18	1.641 (41.7)	1.766 (44.9)	1.191 (30.3)	.980 (24.9)	1.197 (30.4)	.707/.691 (18.0/17.6)	.113/.097 (2.9/2.5)	.368 (9.3)	1.260 (32.0)
20	1.828 (46.4)	1.954 (49.6)	1.316 (33.4)	1.105 (28.1)	1.322 (33.6)	.772/.754 (19.6/19.2)	.148/.128 (3.8/3.3)	.368 (9.3)	1.385 (35.2)
22	1.954 (49.6)	2.078 (52.8)	1.441 (36.6)	1.230 (31.2)	1.447 (36.8)	.772/.754 (19.6/19.2)	.148/.128 (3.8/3.3)	.368 (9.3)	1.510 (38.4)
24	2.078 (52.8)	2.203 (56.0)	1.566 (39.8)	1.385 (35.2)	1.572 (39.9)	.803/.785 (20.4/19.9)	.148/.128 (3.8/3.3)	.395 (10.0)	1.635 (41.5)

TABLE I (Continued): CONNECTOR AND CUT-OUT DIMENSIONS								
Shell Size	L Overall Length	N UNEF-2A Mounting Thread	P	R O-Ring Seal MS29513-	S Panel Thickness		V	Max. Weight (Lbs)
					Min	Max		
8	.820 (20.8)	.5625-24	.134/.074 (3.4/1.9)	16	.062 (1.6)	.187 (4.7)	.204/.144 (5.2/3.7)	.0430
10	.820 (20.8)	.6875-24	.134/.074 (3.4/1.9)	18	.062 (1.6)	.187 (4.7)	.204/.144 (5.2/3.7)	.0610
12	.820 (20.8)	.875-20	.134/.074 (3.4/1.9)	21	.062 (1.6)	.187 (4.7)	.204/.144 (5.2/3.7)	.0880
14	.820 (20.8)	1.000-20	.134/.074 (3.4/1.9)	23	.062 (1.6)	.187 (4.7)	.204/.144 (5.2/3.7)	.1100
16	.820 (20.8)	1.125-18	.134/.074 (3.4/1.9)	25	.062 (1.6)	.187 (4.7)	.204/.144 (5.2/3.7)	.1310
18	.820 (20.8)	1.250-18	.134/.074 (3.4/1.9)	27	.062 (1.6)	.187 (4.7)	.204/.144 (5.2/3.7)	.1720
20	.920 (23.4)	1.375-18	.099/.039 (2.5/1.0)	29	.062 (1.6)	.250 (6.4)	.169/.109 (4.3/2.8)	.2110
22	.920 (23.4)	1.500-18	.099/.039 (2.5/1.0)	30	.062 (1.6)	.250 (6.4)	.169/.109 (4.3/2.8)	.2420
24	.951 (24.2)	1.625-18	.099/.039 (2.5/1.0)	31	.062 (1.6)	.250 (6.4)	.139/.079 (3.5/2.0)	.2930

© 2013 Glenair, Inc.

230-020
MIL-DTL-26482 Series II Type Hermetic
Bayonet Coupling Solder Mount Receptacle with Crimp Removable Contacts • MS3473 Type

230	-	020	FT	10	-	6	D	X

Series 230 MIL-DTL-26482 Type

Material/Finish
- *Z1* = Stainless Steel/ Passivated
- *ZL* = Stainless Steel/ Nickel Plated
- *FT* = C1215 Stainless Steel/Tin Plated

(See Note 2)

Shell Size

Contact Type
- *D* = Pin Face, Crimp Rear, Removable Sockets (See Note 6)

Connector Style
- *020* = Hermetic Solder Mount Receptacle with Solderless Contacts

Insert Arrangement
Per MIL-STD-1669

Alternate Key Position
W, X, Y or Z
(Omit for Normal)

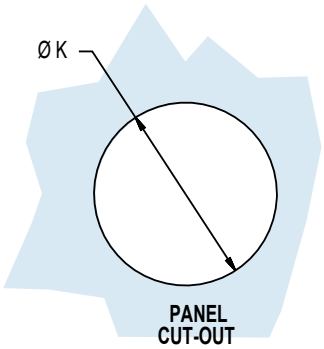

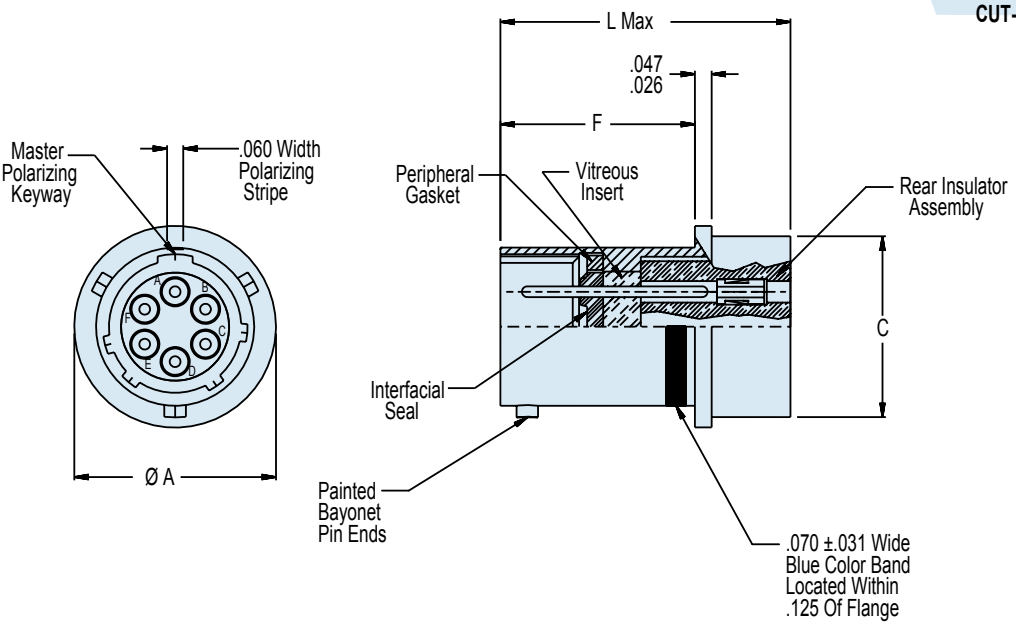

© 2013 Glenair, Inc.

HERMETIC LEAK RATE MOD CODES	
Designator	**Required Leak Rate**
–585A	1 x 10^{-10} cc Helium per second
–585B	1 x 10^{-9} cc Helium per second
–585C	1 x 10^{-8} cc Helium per second

TABLE I: CONNECTOR AND CUT-OUT DIMENSIONS

Shell Size	A Dia Ø.010 (0.3)	C Dia	F	K	L Max
8	.625 (15.9)	.563/.557 (14.3/14.1)	.735/.711 (18.7/18.1)	.570 (14.5)	1.078 (27.4)
10	.750 (19.1)	.673/.667 (17.1/16.9)	.735/.711 (18.7/18.1)	.680 (17.3)	1.078 (27.4)
12	.844 (21.4)	.782/.776 (20.0/19.7)	.735/.711 (18.7/18.1)	.789 (20.0)	1.078 (27.4)
14	.969 (24.6)	.907/.901 (23.0/22.9)	.735/.711 (18.7/18.1)	.914 (23.2)	1.078 (27.4)
16	1.094 (27.8)	1.032/1.026 (26.2/26.1)	.735/.711 (18.7/18.1)	1.039 (26.4)	1.078 (27.4)
18	1.218 (30.9)	1.157/1.151 (29.4/29.2)	.735/.711 (18.7/18.1)	1.164 (29.6)	1.078 (27.4)
20	1.312 (33.3)	1.251/1.245 (31.8/31.6)	.823/.799 (20.9/20.3)	1.258 (32.0)	1.140 (29.0)
22	1.438 (36.5)	1.376/1.371 (35.0/34.8)	.823/.799 (20.9/20.3)	1.383 (35.1)	1.140 (29.0)
24	1.564 (39.7)	1.501/1.495 (38.1/38.0)	.823/.799 (20.9/20.3)	1.508 (38.3)	1.140 (29.0)

APPLICATION NOTES

1. To be identified with manufacturer's name, part number and date code, space permitting.
2. Material/Finish:
   Shell: Z1 - Stainless steel/passivate.
   ZL - Stainless steel/nickel plate.
   FT - Stainless steel/tin plated.
   Titanium and Inconel® available. Consult factory.
   Contacts - 52 Nickel alloy/gold plate.
   Bayonets - Stainless steel/passivate.
   Seals - Silicone elastomer/N.A.
   Insulation - Glass/N.A.
   Rear insulator - Rigid dielectric/N.A.
3. Glenair 230-020 will mate with any QPL MIL-DTL-26482 Series II bayonet coupling plug of same size and insert polarization.
4. Performance:
   Hermeticity - <1 x 10^{-7} cc/sec @ 1 atm differential.
   Dielectric withstanding voltage - Consult factory or MIL-STD-1669.
   Insulation resistance - 5000 megohms min @500VDC.
5. See Table II for available insert arrangement option.
6. Connectors are supplied with applicable crimp socket contacts per MIL-C-39029/22-** and MS3160-** insert and removal tool.
7. Metric Dimensions (mm) are indicated in parentheses.

© 2013 Glenair, Inc.

230-021
MIL-DTL-26482 Series II Type Hermetic
Bayonet Coupling Box Mount Receptacle with Crimp Removable Contacts • MS3477 Type

230	-	021	FT	10	-	6	D	X

Series 230 MIL-DTL-26482 Type

Connector Style
021 = Hermetic Box Mount Receptacle with Solderless Contacts

Material/Finish
Z1 = Stainless Steel/ Passivated
FT = C1215 Stainless Steel/Tin Plated
(See Note 2)

Shell Size

Insert Arrangement
Per MIL-STD-1669

Contact Type
D = Pin Face, Crimp Rear, Removable Sockets (See Note 6)

Alternate Key Position
W, X, Y or Z
(Omit for Normal)

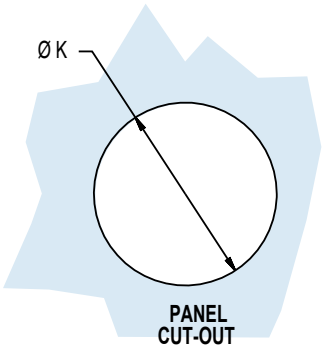

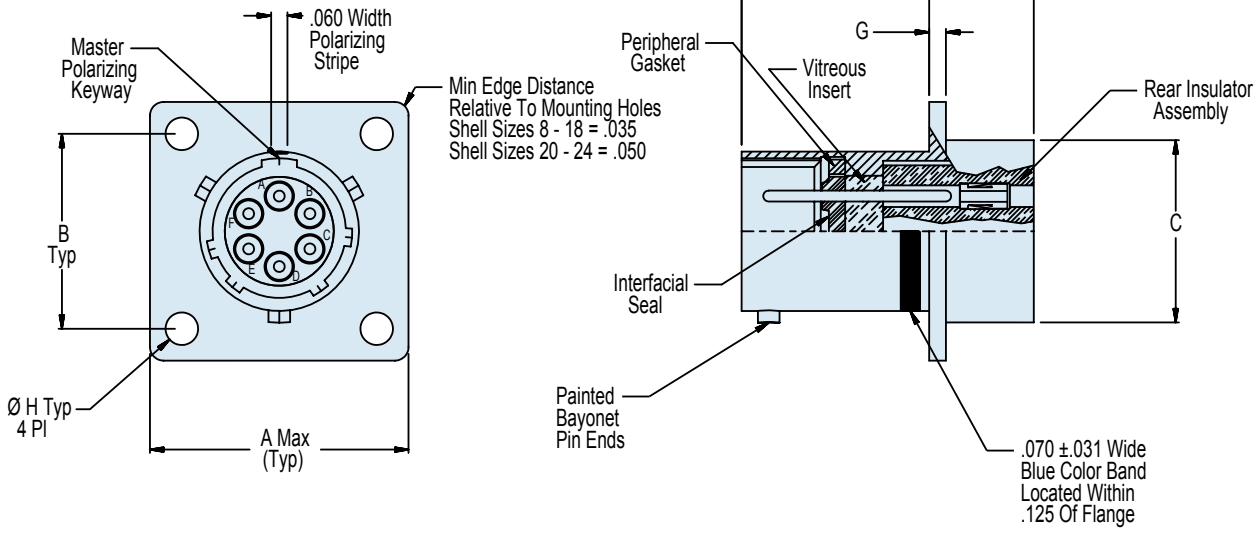

© 2013 Glenair, Inc.

HERMETIC LEAK RATE MOD CODES	
Designator	**Required Leak Rate**
–585A	1 x 10^{-10} cc Helium per second
–585B	1 x 10^{-9} cc Helium per second
–585C	1 x 10^{-8} cc Helium per second

TABLE I: CONNECTOR AND CUT-OUT DIMENSIONS

Shell Size	A	B	C Dia Mounting Locator	F	G	H	K Dia Panel Cut-Out	L
8	.828 (21.0)	.594 (15.1)	.563/.557 (14.3/14.1)	.704/.680 (17.9/17.3)	.078/.046 (2.0/1.2)	.120 (3.0)	.570 (14.5)	1.078 (27.4)
10	.954 (24.2)	.719 (18.3)	.673/.667 (17.1/16.9)	.704/.680 (17.9/17.3)	.078/.046 (2.0/1.2)	.120 (3.0)	.680 (17.3)	1.078 (27.4)
12	1.047 (26.6)	.812 (20.6)	.782/.776 (20.0/19.7)	.704/.680 (17.9/17.3)	.078/.046 (2.0/1.2)	.120 (3.0)	.789 (20.0)	1.078 (27.4)
14	1.141 (29.0)	.906 (23.0)	.907/.901 (23.0/22.9)	.704/.680 (17.9/17.3)	.078/.046 (2.0/1.2)	.120 (3.0)	.914 (23.2)	1.078 (27.4)
16	1.234 (31.3)	.969 (24.6)	1.032/1.026 (26.2/26.1)	.704/.680 (17.9/17.3)	.078/.046 (2.0/1.2)	.120 (3.0)	1.039 (26.4)	1.078 (27.4)
18	1.328 (33.7)	1.062 (27.0)	1.157/1.151 (29.4/29.2)	.704/.680 (17.9/17.3)	.078/.046 (2.0/1.2)	.120 (3.0)	1.164 (29.6)	1.078 (27.4)
20	1.453 (36.9)	1.156 (29.4)	1.251/1.245 (31.8/31.6)	.756/.739 (18.9/18.8)	.110/.078 (2.8/2.0)	.120 (3.0)	1.258 (32.0)	1.140 (29.0)
22	1.578 (40.1)	1.250 (31.8)	1.376/1.371 (35.0/34.8)	.756/.739 (18.9/18.8)	.110/.078 (2.8/2.0)	.120 (3.0)	1.383 (35.1)	1.140 (29.0)
24	1.703 (43.3)	1.375 (34.9)	1.501/1.495 (38.1/38.0)	.756/.739 (18.9/18.8)	.110/.078 (2.8/2.0)	.147 (3.7)	1.508 (38.3)	1.140 (29.0)

APPLICATION NOTES

1. To be identified with manufacturer's name, part number and date code, space permitting.
2. Material/Finish:
   Shell: Z1 - 304L stainless steel/passivate.
   FT - C1215 stainless steel/tin plated.
   Titanium and Inconel® available. Consult factory.
   Contacts - 52 Nickel alloy/gold plate.
   Bayonets - Stainless steel/passivate.
   Seals - Silicone elastomer/N.A.
   Insulation - Glass/N.A.
   Rear insulator - Rigid dielectric/N.A.
3. Glenair 230-021 will mate with any QPL MIL-DTL-26482 Series II bayonet coupling plug of same size and insert polarization.
4. Performance:
   Hermeticity - <1 x 10^{-7} cc/sec @ 1 atm differential.
   Dielectric withstanding voltage - Consult factory or MIL-STD-1669.
   Insulation resistance - 5000 megohms min @500VDC.
5. See Table II for available insert arrangement option.
6. Connectors are supplied with applicable crimp socket contacts per MIL-C-39029/22-** and MS3160-** insert and removal tool.
7. Metric Dimensions (mm) are indicated in parentheses.

© 2013 Glenair, Inc.

230-022
MIL-DTL-26482 Series II Type Hermetic
Bayonet Coupling Jam Nut Mount Receptacle with Crimp Removable Contacts • MS3479 Type

Connector Style
022 = Jam-Nut Mount Receptacle with Solderless Contacts

Insert Arrangement
Per MIL-STD-1669

Alternate Key Position
W, X, Y or Z
(Omit for Normal)

230	-	022	FT	10	-	6	D	X

Series 230 MIL-DTL-26482 Type

Material/Finish
Z1 = Stainless Steel/ Passivated
FT = C1215 Stainless Steel/Tin Plated
(See Note 2)

Shell Size

Contact Type
D = Pin Face, Crimp Rear, Removable Sockets (See Note 6)

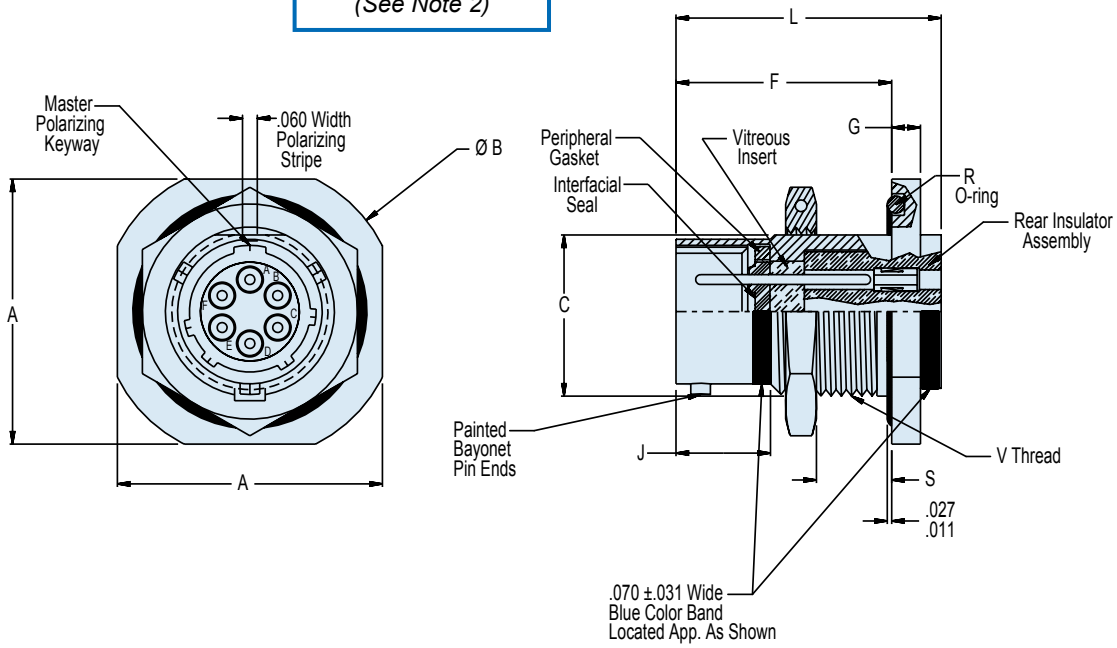

APPLICATION NOTES

1. To be identified with manufacturer's name, part number and date code, space permitting.
2. Material/Finish:
   Shell: Z1 - 304L stainless steel/passivate.
   FT - C1215 stainless steel/tin plated.
   Titanium and Inconel® available. Consult factory.
   Contacts - 52 Nickel alloy/gold plate.
   Bayonets - Stainless steel/passivate.
   Seals - Silicone elastomer/N.A.
   Insulation - Glass/N.A.
   Rear insulator - Rigid dielectric/N.A.
3. Glenair 230-022 will mate with any QPL MIL-DTL-26482 Series II bayonet coupling plug of same size and insert polarization.
4. Performance:
   Hermeticity - <1 x 10^{-7} cc/sec @ 1 atm differential.
   Dielectric withstanding voltage - Consult factory or MIL-STD-1669.
   Insulation resistance - 5000 megohms min @500VDC.
5. See Table II for available insert arrangement option.
6. Connectors are supplied with applicable crimp socket contacts per MIL-C-39029/22-** and MS3160-** insert and removal tool.
7. Metric Dimensions (mm) are indicated in parentheses.

© 2013 Glenair, Inc.

TABLE I: CONNECTOR AND CUT-OUT DIMENSIONS (Continued Below)								
Shell Size	A Length +.000 -.031 (+0 -0.8)	B Dia +.000 -.031 (+0 -0.8) Across Flange Corner	C +.000 -.010 (+0 -0.3) Mounting Flat	E Panel Flat Location	F Mounting Flange Location	G Mounting Flange Thickness	J To Thread Chamfer ±.010 (0.3)	K +.010 -.005 (+0.3 -0.1) Panel Mounting Hole
8	.954 (24.2)	1.078 (27.4)	.530 (13.5)	.536 (13.6)	.887/.867 (22.5/22.0)	.113/.097 (2.9/2.5)	.368 (9.3)	.572 (14.5)
10	1.078 (27.4)	1.203 (30.6)	.655 (16.6)	.661 (16.8)	.887/.867 (22.5/22.0)	.113/.097 (2.9/2.5)	.368 (9.3)	.697 (17.7)
12	1.266 (32.2)	1.391 (35.3)	.818 (20.8)	.824 (20.9)	.887/.867 (22.5/22.0)	.113/.097 (2.9/2.5)	.368 (9.3)	.885 (22.5)
14	1.391 (35.3)	1.516 (38.5)	.942 (23.9)	.948 (24.1)	.887/.867 (22.5/22.0)	.113/.097 (2.9/2.5)	.368 (9.3)	1.010 (25.7)
16	1.516 (38.5)	1.641 (41.7)	1.062 (27.0)	1.072 (27.2)	.887/.867 (22.5/22.0)	.113/.097 (2.9/2.5))	.368 (9.3)	1.135 (28.8)
18	1.641 (41.7)	1.766 (44.9)	1.191 (30.3)	1.197 (30.4)	.887/.867 (22.5/22.0)	.113/.097 (2.9/2.5)	.368 (9.3)	1.260 (32.0)
20	1.828 (46.4)	1.954 (49.6)	1.316 (33.4)	1.322 (33.6)	.916/.896 (23.3/22.8)	.148/.128 (3.8/3.3)	.368 (9.3)	1.385 (35.2)
22	1.954 (49.6)	2.078 (52.8)	1.441 (36.6)	1.447 (36.8)	.916/.896 (23.3/22.8)	.148/.128 (3.8/3.3)	.368 (9.3)	1.510 (38.4)
24	2.078 (52.8)	2.203 (56.0)	1.566 (39.8)	1.572 (39.9)	.916/.896 (23.3/22.8)	.148/.128 (3.8/3.3)	.395 (10.0)	1.635 (41.5)

TABLE I (Continued): CONNECTOR AND CUT-OUT DIMENSIONS							
Shell Size	L Overall Length	N UNEF-2A Mounting Thread	P	R O-Ring Seal MS29513-	S Panel Thickness Min	S Panel Thickness Max	Max. Weight (Lbs)
8	1.078 (27.4)	.5625-24	.134/.074 (3.4/1.9)	16	.062 (1.6)	.187 (4.7)	TBD
10	1.078 (27.4)	.6875-24	.134/.074 (3.4/1.9)	18	.062 (1.6)	.187 (4.7)	TBD
12	1.078 (27.4)	.875-20	.134/.074 (3.4/1.9)	21	.062 (1.6)	.187 (4.7)	TBD
14	1.078 (27.4)	1.000-20	.134/.074 (3.4/1.9)	23	.062 (1.6)	.187 (4.7)	TBD
16	1.078 (27.4)	1.125-18	.134/.074 (3.4/1.9)	25	.062 (1.6)	.187 (4.7)	TBD
18	1.078 (27.4)	1.250-18	.134/.074 (3.4/1.9)	27	.062 (1.6)	.187 (4.7)	TBD
20	1.140 (29.0)	1.375-18	.099/.039 (2.5/1.0)	29	.062 (1.6)	.250 (6.4)	TBD
22	1.140 (29.0)	1.500-18	.099/.039 (2.5/1.0)	30	.062 (1.6)	.250 (6.4)	TBD
24	1.140 (29.0)	1.625-18	.099/.039 (2.5/0.10)	31	.062 (1.6)	.250 (6.4)	TBD

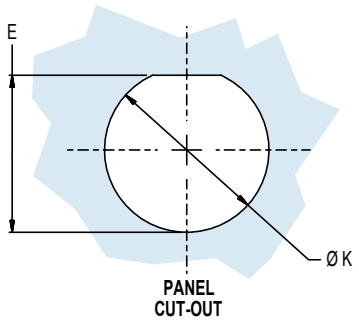

HERMETIC LEAK RATE MOD CODES	
Designator	Required Leak Rate
–585A	1 x 10^{-10} cc Helium per second
–585B	1 x 10^{-9} cc Helium per second
–585C	1 x 10^{-8} cc Helium per second

© 2013 Glenair, Inc.

230-034
MIL-DTL-26482 Series II Type Hermetic
Bayonet Coupling Jam-Nut Mount Receptacle
MS3449 Type

230	-	034	FT	10	-	6	P	X

Series 230 MIL-DTL-26482 Type

Connector Style
034 = Single Hole Jam-Nut Mount Receptacle

Material/Finish
Z1 = Stainless Steel/ Passivated
FT = C1215 Stainless Steel/Tin Plated
(See Note 2)

Shell Size

Insert Arrangement
Per MIL-STD-1669

Contact Type
P = Solder Cup, Pin Face
S = Solder Cup, Socket Face

Alternate Key Position
W, X, Y or Z
(Omit for Normal))

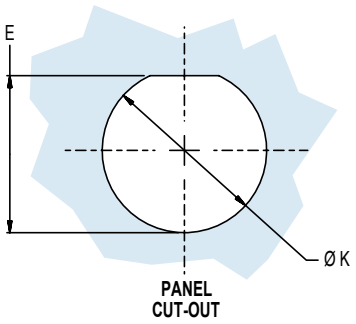

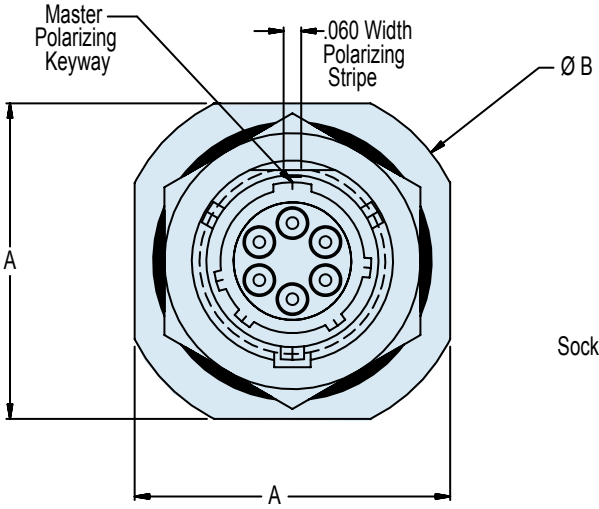

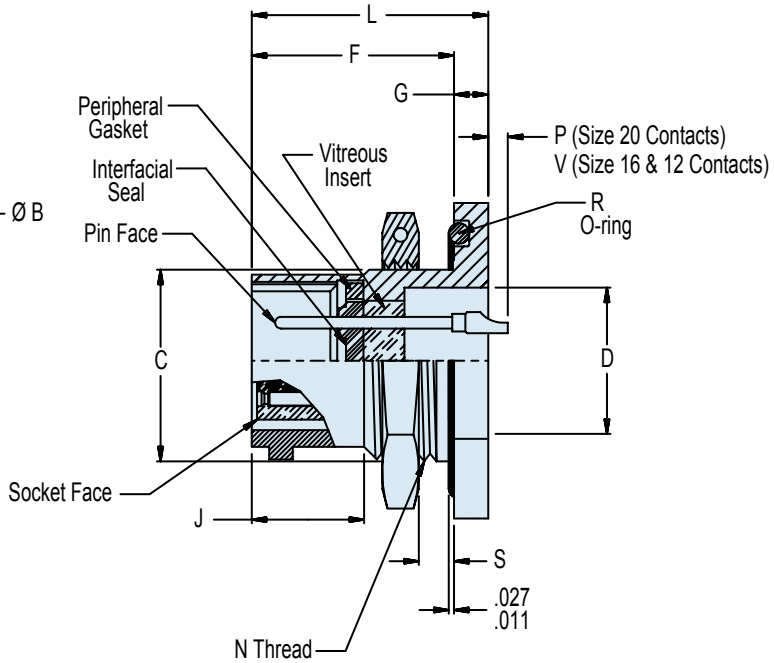

APPLICATION NOTES

1. To be identified with manufacturer's name, part number and date code, space permitting.
2. Material/Finish:
   Shell: Z1 - 304L stainless steel/passivate.
   FT - C1215 stainless steel/tin plated.
   Titanium and Inconel® available. Consult factory.
   Contacts - 52 Nickel alloy/gold plate.
   Bayonets - Stainless steel/passivate.
   Seals - Silicone elastomer/N.A.
   Insulation - Glass/N.A.
   Socket insulator - Rigid dielectric/N.A.
3. Glenair 230-034 will mate with any QPL MIL-DTL-26482 Series II bayonet coupling plug of same size and insert polarization.
4. Performance:
   Hermeticity - <1 x 10^{-7} cc/sec @ 1 atm differential.
   Dielectric withstanding voltage - Consult factory or MIL-STD-1669.
   Insulation resistance - 5000 megohms min @500VDC.
5. Consult factory or MIL-STD-1669 for arrangement and insert position options.
6. Metric Dimensions (mm) are indicated in parentheses.

© 2013 Glenair, Inc.

TABLE I: CONNECTOR AND CUT-OUT DIMENSIONS (Continued Below)

Shell Size	A Length + .000 - .031 (+0 -0.8)	B Dia + .000 - .031 (+0 -0.8) Across Flange Corner	C +.000 - .010 (+0 -0.3) Mounting Flat	D Dia Min	E Panel Flat Location	F Mounting Flange Location	G Mounting Flange Thickness	J To Thread Chamfer ± .010 (0.3)	K + .010 - .005 (+0.3 -0.1) Panel Mounting Hole
8	.954 (24.2)	1.078 (27.4)	.530 (13.5)	.403 (10.2)	.536 (13.6)	.707/.691 (18.0/17.6)	.113/.097 (2.9/2.5)	.368 (9.3)	.572 (14.5)
10	1.078 (27.4)	1.203 (30.6)	.655 (16.6)	.515 (13.1)	.661 (16.8)	.707/.691 (18.0/17.6)	.113/.097 (2.9/2.5)	.368 (9.3)	.697 (17.7)
12	1.266 (32.2)	1.391 (35.3)	.818 (20.8)	.630 (16.0)	.824 (20.9)	.707/.691 (18.0/17.6)	.113/.097 (2.9/2.5)	.368 (9.3)	.885 (22.5)
14	1.391 (35.3)	1.516 (38.5)	.942 (23.9)	.755 (19.2)	.948 (24.1)	.707/.691 (18.0/17.6)	.113/.097 (2.9/2.5)	.368 (9.3)	1.010 (25.7)
16	1.516 (38.5)	1.641 (41.7)	1.062 (27.0)	.880 (22.4)	1.072 (27.2)	.707/.691 (18.0/17.6)	.113/.097 (2.9/2.5))	.368 (9.3)	1.135 (28.8)
18	1.641 (41.7)	1.766 (44.9)	1.191 (30.3)	.980 (24.9)	1.197 (30.4)	.707/.691 (18.0/17.6)	.113/.097 (2.9/2.5)	.368 (9.3)	1.260 (32.0)
20	1.828 (46.4)	1.954 (49.6)	1.316 (33.4)	1.105 (28.1)	1.322 (33.6)	.772/.754 (19.6/19.2)	.148/.128 (3.8/3.3)	.368 (9.3)	1.385 (35.2)
22	1.954 (49.6)	2.078 (52.8)	1.441 (36.6)	1.230 (31.2)	1.447 (36.8)	.772/.754 (19.6/19.2)	.148/.128 (3.8/3.3)	.368 (9.3)	1.510 (38.4)
24	2.078 (52.8)	2.203 (56.0)	1.566 (39.8)	1.385 (35.2)	1.572 (39.9)	.803/.785 (20.4/19.9)	.148/.128 (3.8/3.3)	.395 (10.0)	1.635 (41.5)

TABLE I (Continued): CONNECTOR AND CUT-OUT DIMENSIONS

Shell Size	L Overall Length	N UNEF-2A Mounting Thread	P	R O-Ring Seal MS29513-	S Panel Thickness		V	Max. Weight (Lbs)
					Min	Max		
8	.820 (20.8)	.5625-24	.134/.074 (3.4/1.9)	16	.062 (1.6)	.187 (4.7)	.204/.144 (5.2/3.7)	.0430
10	.820 (20.8)	.6875-24	.134/.074 (3.4/1.9)	18	.062 (1.6)	.187 (4.7)	.204/.144 (5.2/3.7)	.0610
12	.820 (20.8)	.875-20	.134/.074 (3.4/1.9)	21	.062 (1.6)	.187 (4.7)	.204/.144 (5.2/3.7)	.0880
14	.820 (20.8)	1.000-20	.134/.074 (3.4/1.9)	23	.062 (1.6)	.187 (4.7)	.204/.144 (5.2/3.7)	.1100
16	.820 (20.8)	1.125-18	.134/.074 (3.4/1.9)	25	.062 (1.6)	.187 (4.7)	.204/.144 (5.2/3.7)	.1310
18	.820 (20.8)	1.250-18	.134/.074 (3.4/1.9)	27	.062 (1.6)	.187 (4.7)	.204/.144 (5.2/3.7)	.1720
20	.920 (23.4)	1.375-18	.099/.039 (2.5/1.0)	29	.062 (1.6)	.250 (6.4)	.169/.109 (4.3/2.8)	.2110
22	.920 (23.4)	1.500-18	.099/.039 (2.5/1.0)	30	.062 (1.6)	.250 (6.4)	.169/.109 (4.3/2.8)	.2420
24	.951 (24.2)	1.625-18	.099/.039 (2.5/0.1)	31	.062 (1.6)	.250 (6.4)	.169/.109 (4.3/2.8)	.2930

HERMETIC LEAK RATE MOD CODES

Designator	Required Leak Rate
–585A	1 x 10^{-10} cc Helium per second
–585B	1 x 10^{-9} cc Helium per second
–585C	1 x 10^{-8} cc Helium per second

© 2013 Glenair, Inc.

237-051
MIL-DTL-26482 Series II, MS3440 Type Hermetic
Special Narrow Square Flange Mount Receptacle with Bayonet Coupling and Solder Cup Termination

Series 237 MIL-DTL-26482 Type	Connector Style	Shell Size	Insert Arrangement	Contact Style	Alternate Key Position
237 -	051H = Square Flange Mount Hermetic Receptacle	12 -	8 Per MIL-STD-1669 (See Note 5)	P = Solder Cup	X W, X, Y or Z (Omit for Normal) See Note 5

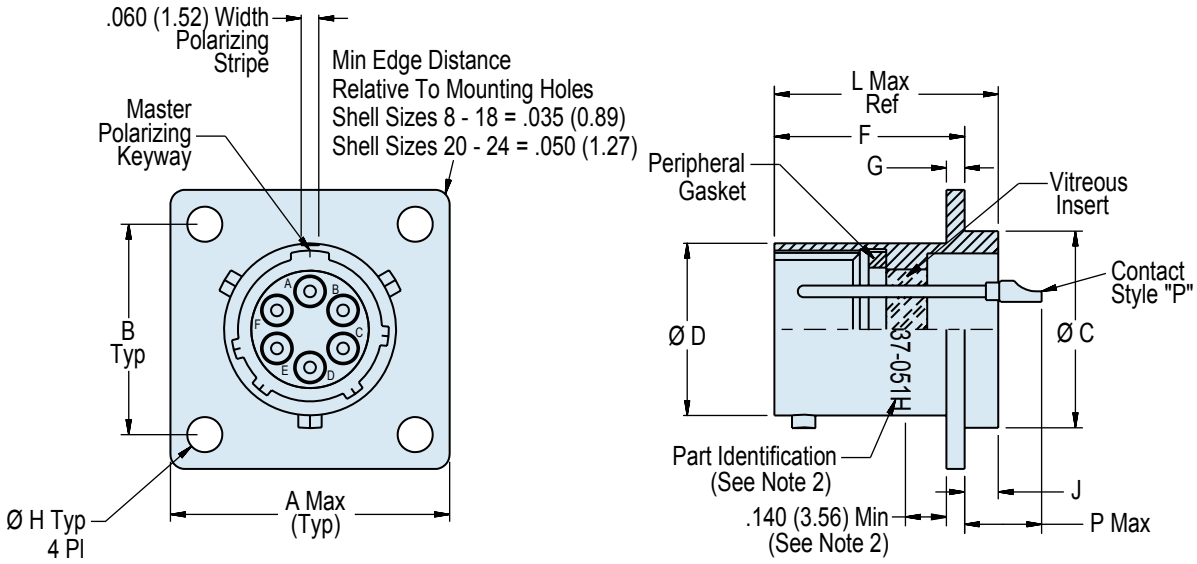

APPLICATION NOTES

1. Material/Finish:
   Shell - C1215 CRS/Tin plated.
   Titanium and Inconel® available. Consult factory.
   Contacts - 52 nickel alloy/Tin plated.
   Bayonets - Stainless Steel/passivated.
   Seals - Silicone elastomer/N.A.
   Insulator - Glass, NOIBN/N.A.
2. To be identified with manufacturer's name, part number and date code, space permitting.
3. Hermeticity - <1 x 10^{-7} cc/sec @ 1 atm differential.
   Dielectric withstanding voltage - Consult factory or MIL-STD-1669.
   Insulation resistance - 5000 megohms min @500VDC.
4. Glenair 237-051 will mate with any QPL MIL-DTL-26482 Series II bayonet coupling plug of same size and insert polarization.
5. Consult factory and/or MIL-STD-1669 for arrangement and insert position options.
6. Metric Dimensions (mm) are indicated in parentheses.

© 2013 Glenair, Inc.

TABLE I: CONNECTOR AND CUT-OUT DIMENSIONS (Continued Below)

Shell Size	A	B	C Dia Mounting Locator	D Dia	F	G
8	.828 (21.03)	.594 (15.09)	.563/.557 (14.30/14.15)	.474/.468 (12.04/11.89)	.519/.479 (13.18/12.17)	.073/.052 (1.85/1.32)
10	.954 (24.23)	.719 (18.26)	.673/.667 (17.09/16.94)	.591/.585 (15.01/14.86)		
12	1.047 (26.59)	.812 (20.62)	.782/.776 (19.86/19.71)	.751/.745 (19.08/18.92)		
14	1.141 (28.98)	.906 (23.01)	.907/.901 (23.03/22.89)	.876/.870 (22.25/22.10)		
16	1.234 (31.34)	.969 (24.61)	1.032/1.026 (26.21/26.06)	1.001/.995 (25.43/25.27)		
18	1.328 (33.73)	1.062 (26.97)	1.157/1.151 (29.39/29.24)	1.126/1.120 (28.60/28.45)		
20	1.453 (36.91)	1.156 (29.36)	1.251/1.245 (31.78/31.62)	1.251/1.245 (31.78/31.62)	.581/.541 (14.76/13.74)	
22	1.578 (40.08)	1.250 (31.75)	1.376/1.371 (34.95/34.82)	1.376/1.371 (34.95/34.82)		
24	1.703 (43.26)	1.375 (34.93)	1.501/1.495 (38.13/37.97)	1.501/1.495 (38.13/37.97)	.613/.573 (15.57/14.55)	

TABLE I: CONNECTOR AND CUT-OUT DIMENSIONS (Continued from Above)

Shell Size	H	J	L	P Max	Panel Cut-Out Dia	Max Weight Lbs. (Kg)
8	.120 (3.05)	.125/.105 (3.18/2.67)	.801 (20.35)	.344 (8.74)	.570 (14.48)	.038 (.017)
10					.680 (17.27)	.044 (.020)
12					.789 (20.04)	.052 (.024)
14					.914 (23.22)	.070 (.032)
16					1.039 (26.39)	.085 (.039)
18					1.164 (29.57)	.098 (.045)
20		.093/.073 (2.36/1.85)	.863 (21.92)		1.258 (31.95)	.110 (.050)
22		125/.105 (3.18/2.67)	.895 (22.73)	.377 (9.58)	1.383 (35.13)	.150 (.068)
24	.147 (3.73)				1.508 (38.30)	.280 (.127)

HERMETIC LEAK RATE MOD CODES	
Designator	**Required Leak Rate**
–585A	1 x 10^{-10} cc Helium per second
–585B	1 x 10^{-9} cc Helium per second
–585C	1 x 10^{-8} cc Helium per second

© 2013 Glenair, Inc.

237-133
MIL-DTL-26482 Series I, MS3112 Type Hermetic
Square Flange Mount Receptacle with Bayonet Coupling and Solder Cup Termination

Connector Style	Insert Arrangement	Alternate Key Position						
133 = Square Flange Mount Hermetic Receptacle	*Per MIL-STD-1669 (See Note 5)*	*W, X, Y or Z (Omit for Normal) See Note 5*						
237	**-**	**133**	**Z1**	**10**	**-**	**6**	**P**	**X**	**-**	**1**
Series 237 MIL-DTL-26482 Type		**Finish** *Z1 = Passivate FT = Fused Tin*	**Shell Size**		**Contact Style** *P = Solder Cup, Pin Face X = Eyelet, Pin Face*		**O-Ring** *Omit for O-Ring 1 = No O-Ring*	

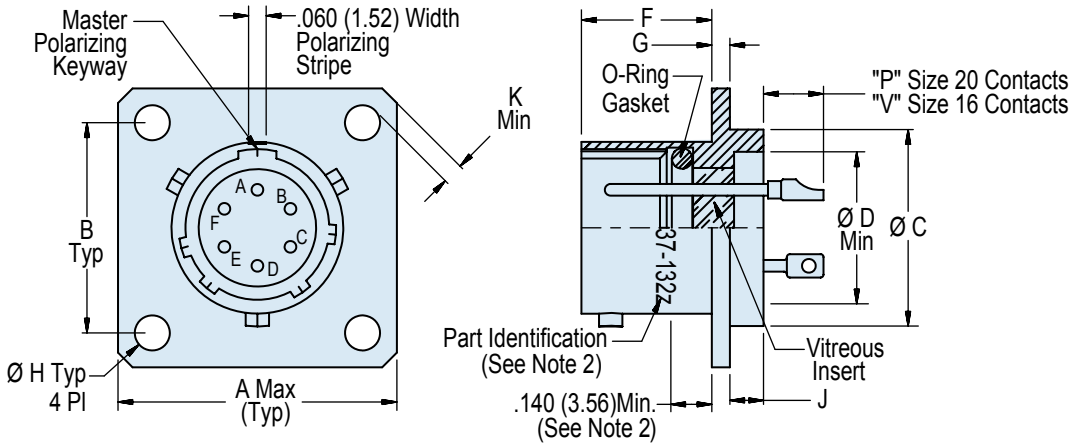

APPLICATION NOTES

1. Material/Finish:
   Z1 Shell - 304 CRES/passivated.
   FT Shell - C1215 CRS/Tin plated.
   Titanium and Inconel® available. Consult factory.
   Contacts - 52 nickel alloy/Tin plate.
   Bayonets - Stainless Steel/passivated.
   O-Ring Seal - Silicone elastomer/N.A.
   Insulator - Glass/N.A.
2. To be identified with manufacturer's name, part number and date code, space permitting.
3. Hermeticity - <1 x 10^{-7} cc/sec @ 1 atm differential.
   Dielectric withstanding voltage - Consult factory or MIL-STD-1669.
   Insulation resistance - 5000 megohms min @500VDC.
4. Glenair 237-133 will mate with any QPL MIL-DTL-26482 Series I bayonet coupling plug of same size and insert polarization with opposite contact gender.
5. Consult factory and/or MIL-STD-1669 for arrangement and insert position options.
6. Metric Dimensions (mm) are indicated in parentheses.

© 2013 Glenair, Inc.

TABLE I: CONNECTOR AND CUT-OUT DIMENSIONS (Continued Below)

Shell Size	A	B	C Dia Mounting Locator	D Dia Min	F	G
8	.828 (21.03)	.594 (15.09)	.563/.557 (14.30/14.15)	.403 (10.24)	.462/.431 (11.73/10.95)	.078/.046 (1.98/1.17)
10	.954 (24.23)	.719 (18.26)	.673/.667 (17.09/16.94)	.515 (13.08)		
12	1.047 (26.59)	.812 (20.62)	.782/.776 (19.86/19.71)	.630 (16.00)		
14	1.141 (28.98)	.906 (23.01)	.907/.901 (23.03/22.89)	.755 (19.18)		
16	1.234 (31.34)	.969 (24.61)	1.032/1.026 (26.21/26.06)	.880 (22.35)		
18	1.328 (33.73)	1.062 (26.97)	1.157/1.151 (29.39/29.24)	.980 (24.89)		
20	1.453 (36.91)	1.156 (29.36)	1.251/1.245 (31.78/31.62)	1.105 (28.07)	.556/.525 (14.12/13.34)	.110/.078 (2.79/1.98)
22	1.578 (40.08)	1.250 (31.75)	1.376/1.371 (34.95/34.82)	1.230 (31.24)		
24	1.703 (43.26)	1.375 (34.93)	1.501/1.495 (38.13/37.97)	1.385 (35.18)	.589/.568 (14.96/14.43)	

TABLE I: CONNECTOR AND CUT-OUT DIMENSIONS (Continued from Above)

Shell Size	H	J	K	P	V	Panel Cut-Out Dia
8	.120 (3.05)	.063/.037 (1.60/0.94)	.035 (0.89)	.178/.118 (4.52/3.00)	.248/.118 (6.30/3.00)	.570 (14.48)
10						.680 (3.67)
12						.789 (20.04)
14						.914 (23.22)
16						1.039 (26.39)
18						1.164 (29.57)
20		.095/.063 (2.41/1.60)	.050 (1.27)			1.258 (31.95)
22				.146/.086 (37.08/2.18)	2.16/.156 (54.86/3.96)	1.383 (35.13)
24	.147 (3.73)					1.508 (38.30)

HERMETIC LEAK RATE MOD CODES	
Designator	**Required Leak Rate**
–585A	1 x 10^{-10} cc Helium per second
–585B	1 x 10^{-9} cc Helium per second
–585C	1 x 10^{-8} cc Helium per second

© 2013 Glenair, Inc.

237-240
MIL-DTL-26482 Series I Type Hermetic
Special Square Flange Mount Receptacle with Bayonet Coupling and Solder Cup Termination

Series 230 MIL-DTL-26482 Type	Shell Size		Insert Arrangement *Per MIL-STD-1669 See Note 5*		Alternate Key Position *W, X, Y or Z (Omit for Normal) See Note 5*
237-240H	12	-	8	P	X

Contact Style *P = Solder Cup*

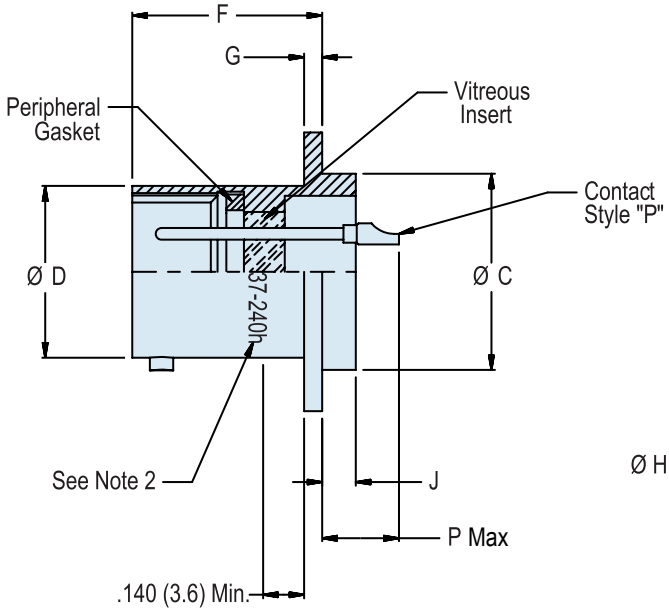

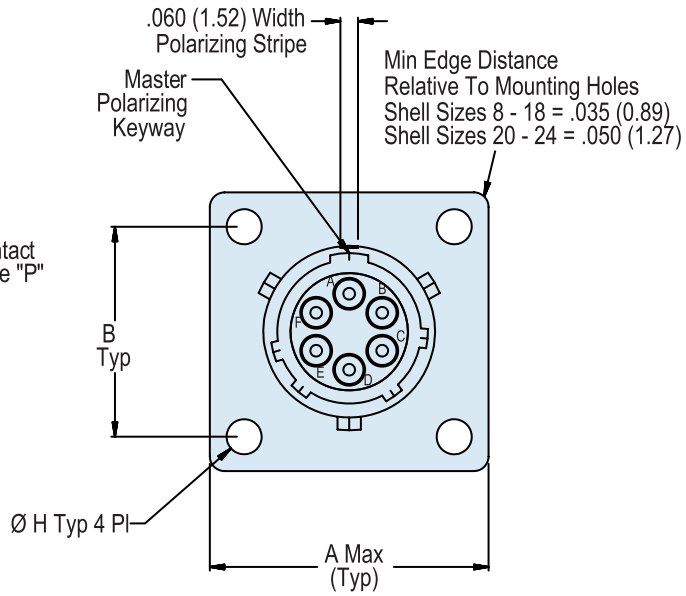

© 2013 Glenair, Inc. U.S. CAGE Code 06324 Printed in U.S.A.

237-240
MIL-DTL-26482 Series I Type Hermetic
Special Square Flange Mount Receptacle with Bayonet Coupling and Solder Cup Termination

TABLE I: CONNECTOR AND CUT-OUT DIMENSIONS

Shell Size	A ±.016 (0.41)	B	C Dia	D Dia	F +.025 -.015 (+0.64 -0.38)	G +.011 -.010 (+0.28 -0.25)	H ±.005 (0.13)	J ±.015 (0.38)	P Max	Panel Cut-Out Dia	Max Weight (Lbs)
8	.812 (20.62)	.594 (15.09)	.563/.557 (14.30/14.15)	.474/.468 (12.04/11.89)	.494 (12.55)	.062 (1.57)	.120 (3.05)	.047 (1.19)	.344 (8.74)	.570 (14.48)	.038
10	.938 (23.83)	.719 (18.3)	.673/.667 (17.09/16.94)	.591/.585 (15.01/14.86)	.494 (12.55)	.062 (1.57)	.120 (3.05)	.047 (1.19)	.344 (8.74)	.680 (17.27)	.044
12	1.031 (26.19)	.812 (20.6)	.782/.776 (19.86/19.71)	.751/.745 (19.08/18.92)	.494 (12.55)	.062 (1.57)	.120 (3.05)	.047 (1.19)	.344 (8.74)	.789 (20.04)	.052
14	1.125 (28.58)	.906 (23.0)	.907/.901 (23.04/22.89)	.876/.870 (22.35/22.10)	.494 (12.55)	.062 (1.57)	.120 (3.05)	.047 (1.19)	.344 (8.74)	.914 (23.22)	.070
16	1.219 (30.96)	.969 (24.6)	1.032/1.026 (26.21/26.06)	1.001/.995 (25.43/25.27)	.494 (12.55)	.062 (1.57)	.120 (3.05)	.047 (1.19)	.344 (8.74)	1.039 (26.39)	.085
18	1.312 (33.32)	1.062 (27.0)	1.157/1.151 (29.39/29.24)	1.126/1.120 (28.60/28.45)	.494 (12.55)	.062 (1.57)	.120 (3.05)	.047 (1.19)	.344 (8.74)	1.164 (29.57)	.098
20	1.438 (36.53)	1.156 (29.4)	1.251/1.245 (31.78/31.62)	1.251/1.245 (31.78/31.62)	.556 (14.12)	.062 (1.57)	.120 (3.05)	.047 (1.19)	.344 (8.74)	1.258 (31.95)	.110
22	1.562 (39.67)	1.250 (31.8)	1.376/1.370 (34.95/34.80)	1.376/1.370 (34.95/34.80)	.556 (14.12)	.062 (1.57)	.120 (3.05)	.079 (2.01)	.377 (9.58)	1.383 (35.13)	.150
24	1.688 (42.88)	1.375 (34.9)	1.501/1.495 (38.13/37.93)	1.501/1.495 (38.13/37.97)	.588 (14.94)	.062 (1.57)	.147 (1.19)	.079 (2.01)	.377 (9.58)	1.508 (38.30)	.280

APPLICATION NOTES

1. Material/Finish:
   Shell - C1215 CRS/pure tin plated, RoHS.
   Contacts - Nickel-iron alloy 52/pure tin plated, RoHS.
   Hermetic Insulator - Full glass/N.A.
   Bayonets - stainless steel/passivated.
   Seal - Silicone elastomer/N.A.
   Insulation - glass/N.A.
2. Assembly to be identified with manufacturer's name, part number and date code, space permitting.
3. Performance requirements:
   Hermeticity - <1 x 10^{-7} sccHe/se @ 1 Atm. Diff.
   DWV - Consult factory or MIL-STD-1669.
   Insulation resistance - 5000 megohms min @ 500VDC.
4. Glenair 237-240 will mate with any QPL MIL-DTL-26482 Series I Bayonet Coupling Plug (MS3116) of same size and inmsert polarization.
5. Consult factory and/or MIL-STD-1669 for arrangement and insert position options.
6. Metric Dimensions (mm) are indicated in parentheses.

© 2013 Glenair, Inc.

257-135
MIL-DTL-26482 Series II Type Hermetic
Bayonet Coupling Jam Nut Mount
Pin-Pin Bulkhead Feedthrough Receptacle

Series 257 MIL-DTL-26482 Type	Connector Style	Shell Size	Alternate Key Position
257	135 = Jam-Nut Mount Pin-Pin Feedthrough Receptacle	24	61 = Per MIL-STD-1669

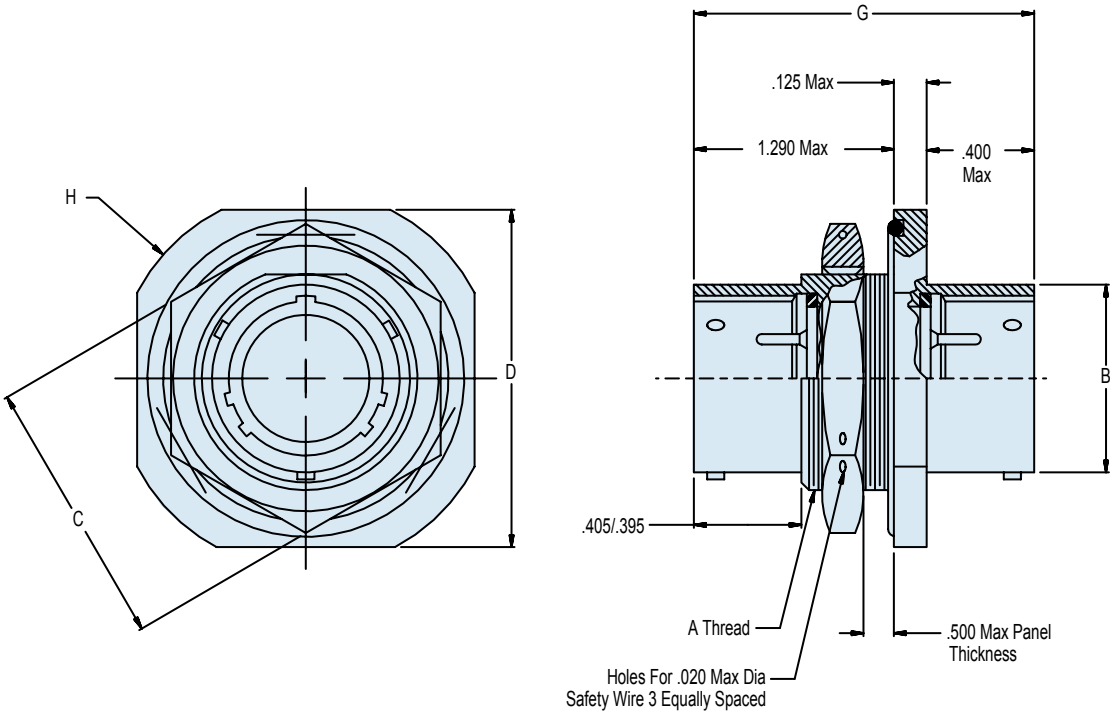

APPLICATION NOTES

1. To be identified with manufacturer's name, part number and date code, space permitting.
2. Electrical safety limits must be established by the user. Peak voltage, switching surge, transient, etc. should be used to determine the safety of the application.
3. Metric Dimensions (mm) are indicated in parentheses.
4. Material/Finish:
   Shell and jam-nut: Z1 - CRES/nickel plated.
   Titanium and Inconel® available. Consult factory.
   Contacts - Alloy 52/gold plate.
   Bayonets - CRES/passivated.
   Seals - Fluorosilicone/N.A.
   Spacer - High grade rigid dielectric/N.A.
   Insulator - Glass/N.A.

© 2013 Glenair, Inc. U.S. CAGE Code 06324 Printed in U.S.A.

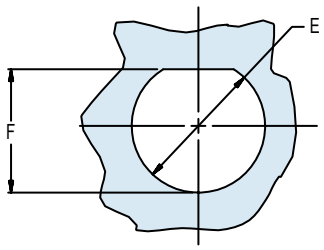

RECOMMENDED PANEL CUT-OUT

HERMETIC LEAK RATE MOD CODES	
Designator	**Required Leak Rate**
–585A	1 x 10^{-10} cc Helium per second
–585B	1 x 10^{-9} cc Helium per second
–585C	1 x 10^{-8} cc Helium per second

TABLE I: CONNECTOR AND CUT-OUT DIMENSIONS (Continued Below)

Shell Size	A Thread Class 2A	B Dia Max	C Hex	D Flats	E Dia +.010 -.005 (+0.3 -0.1)	F Dia +.010 -.005 (+0.3 -0.1)	G Max	H Dia ± .016 (0.4)
8	9/16-24 UNEF	.474 (12.0)	.750 (19.1)	.938 (23.8)	.572 (14.5)	.540 (13.7)	2.125 (54.0)	1.062 (27.0)
10	11/16-24 UNEF	.591 (15.0)	.875 (22.2)	1.062 (27.0)	.697 (17.7)	.665 (16.9)	2.125 (54.0)	1.187 (30.1)
12	7/8-20 UNEF	.751 (19.1)	1.062 (27.0)	1.250 (31.8)	.895 (22.7)	.828 (21.0)	2.125 (54.0)	1.375 (34.9)
14	1-20 UNEF	.876 (22.3)	1.188 (30.2)	1.375 (34.9)	1.010 (25.7)	.952 (24.2)	2.125 (54.0)	1.500 (38.1)
16	1 1/8-18 UNEF	1.001 (25.4)	1.312 (33.3)	1.500 (38.1)	1.135 (28.8)	1.076 (27.3)	2.125 (54.0)	1.625 (41.3)
18	1 1/4-18 UNEF	1.126 (28.6)	1.438 (37.0)	1.625 (41.3)	1.260 (32.0)	1.201 (30.5)	2.125 (54.0)	1.750 (44.5)
20	1 3/8-18 UNEF	1.251 (31.8)	1.562 (39.7)	1.812 (46.0)	1.385 (35.2)	1.326 (33.7)	2.125 (54.0)	1.938 (49.2)
22	1 1/2-18 UNEF	1.376 (35.0)	1.688 (42.9)	1.938 (49.2)	1.510 (13.0)	1.451 (36.9)	2.125 (54.0)	2.062 (52.4)
24	1 5/8-18 UNEF	1.501 (38.1)	1.812 (46.0)	2.062 (52.4)	1.635 (41.5)	1.576 (40.0)	2.125 (54.0)	2.187 (55.5)

© 2013 Glenair, Inc.

947-292
MIL-DTL-26482 Series II Type Hermetic
Bayonet Coupling Jam Nut Mount
Pin-Socket Bulkhead Feedthrough Receptacle

Basic Part Number

Shell Size

Pin/Socket Designator
P = Pin on Jam Nut Side
S = Socket on Jam Nut Side

947-292 ZL 22 - 55 P X

Material/Finish
Z1 = CRES Passivate
ZL = CRES Nickel Plate

Insert Arrangement
Per MIL-STD-1669

Alternate Key Position
W, X, Y or Z
(Omit for Normal)

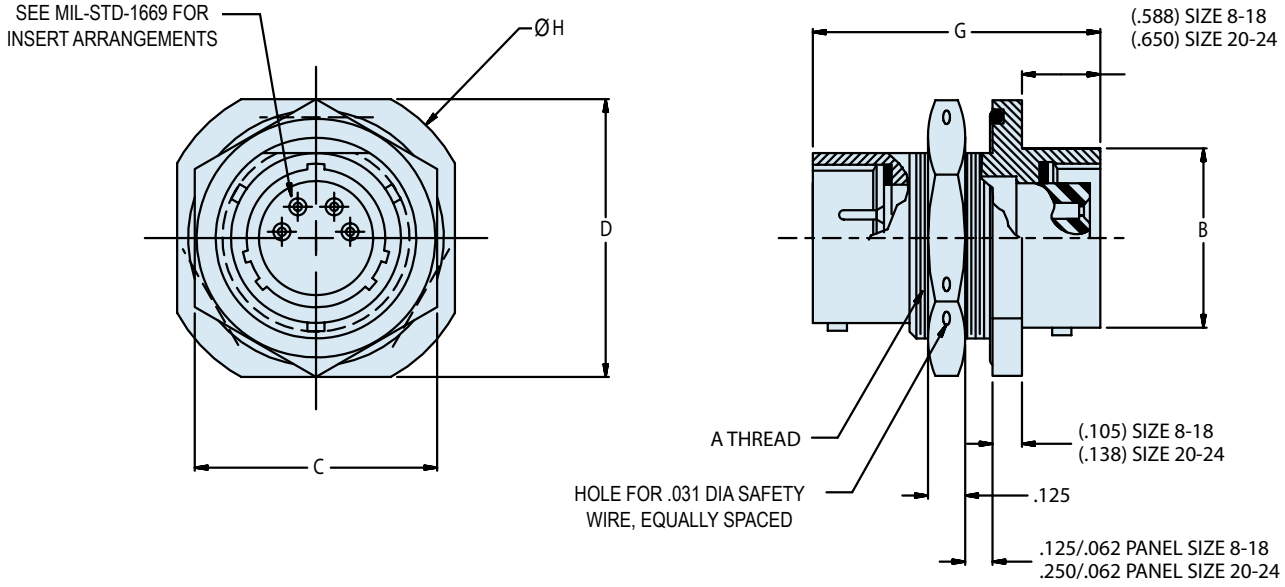

© 2013 Glenair, Inc. U.S. CAGE Code 06324 Printed in U.S.A.

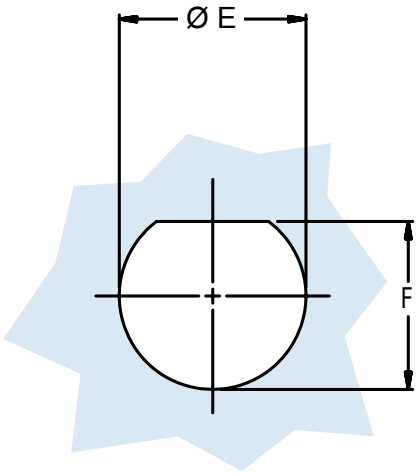

Panel Cut Out

HERMETIC LEAK RATE MOD CODES	
Designator	**Required Leak Rate**
–585A	1 x 10^{-10} cc Helium per second
–585B	1 x 10^{-9} cc Helium per second
–585C	1 x 10^{-8} cc Helium per second

TABLE I: CONNECTOR AND CUT-OUT DIMENSIONS

Shell Size	A Thread Class 2A	B Dia Max	C Hex	D Flats	E Dia +.010 -.005 (+0.3 -0.1)	F Dim +.010 -.005 (+0.3 -0.1)	G Max	H Dia ± .016 (0.4)
8	9/16-24 UNEF	.474 (12.0)	.750 (19.1)	.954 (24.2)	.572 (14.5)	.536 (13.6)	1.420 (36.1)	1.062 (27.0)
10	11/16-24 UNEF	.591 (15.0)	.875 (22.2)	1.078 (27.4)	.697 (17.7)	.661 (16.8)	1.420 (36.1)	1.187 (30.1)
12	7/8-20 UNEF	.751 (19.1)	1.062 (27.0)	1.266 (32.2)	.895 (22.7)	.824 (20.9)	1.420 (36.1)	1.375 (34.9)
14	1-20 UNEF	.876 (22.3)	1.188 (30.2)	1.391 (35.3)	1.010 (25.7)	.948 (24.1)	1.420 (36.1)	1.500 (38.1)
16	1 1/8-18 UNEF	1.001 (25.4)	1.312 (33.3)	1.516 (38.5)	1.135 (28.8)	1.072 (27.2)	1.420 (36.1)	1.625 (41.3)
18	1 1/4-18 UNEF	1.126 (28.6)	1.438 (37.0)	1.641 (41.7)	1.260 (32.0)	1.197 (30.4)	1.420 (36.1)	1.750 (44.5)
20	1 3/8-18 UNEF	1.251 (31.8)	1.562 (39.7)	1.828 (46.4)	1.385 (35.2)	1.322 (33.6)	1.580 (40.1)	1.938 (49.2)
22	1 1/2-18 UNEF	1.376 (35.0)	1.688 (42.9)	1.954 (49.6)	1.510 (13.0)	1.447 (36.8)	1.580 (40.1)	2.062 (52.4)
24	1 5/8-18 UNEF	1.501 (38.1)	1.812 (46.0)	2.087 (53.0)	1.635 (41.5)	1.572 (39.9)	1.620 (41.1)	2.187 (55.5)

APPLICATION NOTES

1. To be identified with manufacturer's name, part number and date code, space permitting.
2. Hermeticity: <1x10^{-7} cc/sec @ 1 ATM differential
3. Material/Finish:
   Shell and jam-nut: Z1 - CRES/passivate.
   ZL - CRES/nickel plate.
   Titanium and Inconel® available. Consult factory.
   Contacts - Alloy 52/gold plate.
   Bayonets - CRES/passivated.
   Insulator - Vitreous glass seal
   Seals - Silicone Elastomer/N.A.
   Spacer - High grade rigid dielectric/N.A.
4. Metric Dimensions (mm) are indicated in parentheses.

© 2013 Glenair, Inc.

BAYONET AND THREADED

MIL-DTL-83723

Series III Type Hermetic Connectors



The MIL-DTL-83723 Series III type connector is ideally suited for use on commercial, military and aerospace interconnect systems that demand hermetic sealing and high vibration resistance in a medium density cylindrical connector. Thirty-four insert arrangements are available in both threaded and bayonet coupling styles for a wide range of applications. Because Glenair makes all its hermetic connectors in-house, including the machining of shells, molding of interfacial seals and firing of hermetic components, we can offer you outstanding availability on stock products and fast turnaround on special orders.

GLASS-SEALED Hermetic CONNECTORS

Glenair, Inc.
1211 Air Way
Glendale, CA
91201-2497
818-247-6000
sales@glenair.com
www.glenair.com

MIL-DTL-83723 Series III Threaded and Bayonet Coupling Hermetic Connectors

Glenair MIL-DTL-83723 Series III Hermetic connectors are offered in either passivated stainless steel or fused tin over cold rolled carbon steel, with glass insulators fused to the connector shell, and contacts meeting a leak rate of 1 X 10^{-7} cc/Helium per second.

Maximum design flexibility is built into the MIL-DTL-83723 hermetic connector– with a minimum of 2 to a maximum of 61 circuits per connector in a wide variety of contact arrangements IAW MIL-STD-1554. Fluorosilicone elastomer interfacial and peripheral seals ensure positive sealing with plug connectors.

Gold plated nickel-iron alloy 52 contacts—available in sizes 12, 16 and 20—depending on the layout chosen—offer a broad selection of insert arrangement options. Solder cup, straight pin and PCB contact styles are standard.

Quick Selection Guide

Part Number	Description	Page
	MIL-DTL-83723 Series III Type Insert Arrangements	E-2
	Glenair Hermetic Connector Products Space Grade Mod Codes	E-3
	Glenair Hermetic Connector Products Special Leak Rate Mod Codes	E-4
	MIL-DTL-83723 Series III Type Insert Arrangements and Keyway Positions	E-5
230-023	Bayonet Coupling Square Flange Receptacle with Solder Terminals MIL-DTL-83723/79 Type	E-6
230-024	Bayonet Coupling Solder Flange Receptacle with Solder Terminals MIL-DTL-83723/80 Type	E-8
230-025	Bayonet Coupling Jam Nut Receptacle with Solder Terminals MIL-DTL-83723/81 Type	E-10
230-026	Bayonet Coupling Solder Flange Receptacle with Straight Pin Contacts MIL-DTL-83723/93 Type	E-12
230-027	Bayonet Coupling Jam Nut Receptacle with Straight Pin or PCB Contacts MIL-DTL-83723/94 Type	E-14
230-028	Threaded Coupling Square Flange Receptacle with Solder Terminals MIL-DTL-83723/88 Type	E-16
230-029	Threaded Coupling Jam Nut Receptacle with Solder Terminals MIL-DTL-83723/89 Type	E-18
230-030	Threaded Coupling Solder Flange Receptacle with Solder Terminals MIL-DTL-83723/90 Type	E-20

© 2013 Glenair, Inc.

MIL-DTL-83723 Series III Type
Threaded and Bayonet Coupling
Insert Arrangements Per MIL-STD-1554


8-2


8-3


8-98


10-2


10-5


10-6


10-20

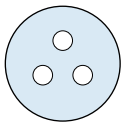
12-3

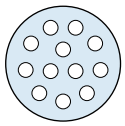
12-12

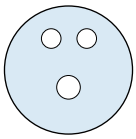
14-3

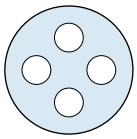
14-4

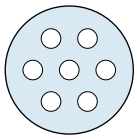
14-7

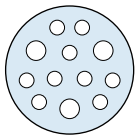
14-12

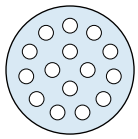
14-15

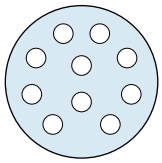
16-10

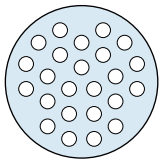
16-24

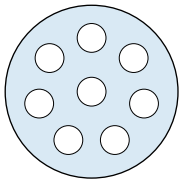
18-8

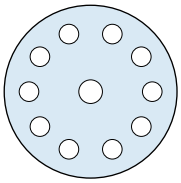
18-11

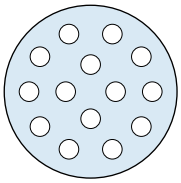
18-14

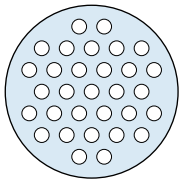
18-31

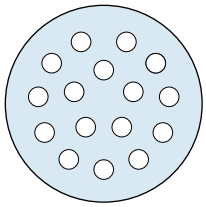
20-16

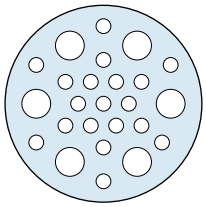
20-25

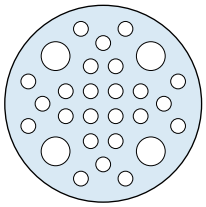
20-28

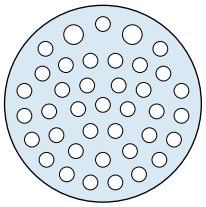
20-39

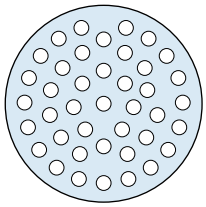
20-41

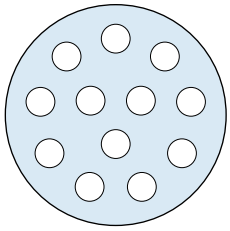
22-12

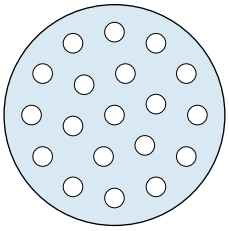
22-19

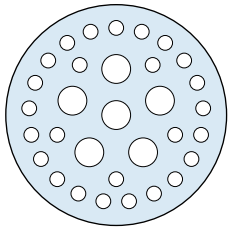
22-32

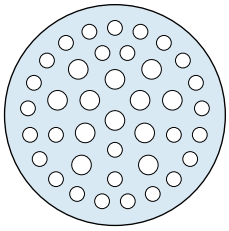
22-39

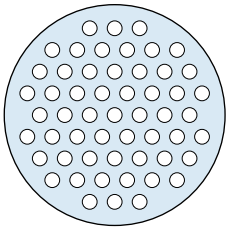
22-55

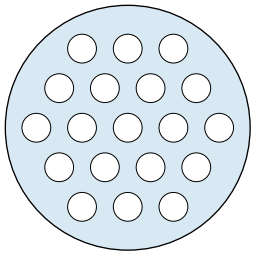
24-19

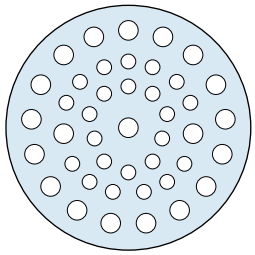
24-43

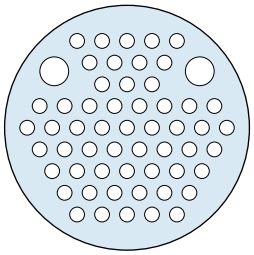
24-57

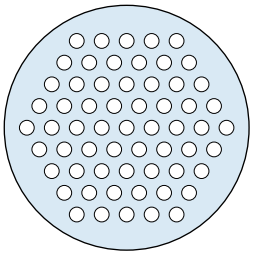
24-61

© 2013 Glenair, Inc.

Leak Rate Designator
B *– (See Table Below)*

– 585 B

Mod Code
585 *– Increased Hermeticity Mod Code*

What is the –585 Mod Code?

Glenair offers an array of hermetic connectors with more stringent leak rate requirements. By adding "**–585**" and the designator letter "**A**", "**B**" or "**C**"—depending on the hermeticity desired—to the end of a standard part number, connectors will be built to exceed the standard 1 x 10^{-7} cc Helium per second leak rate specified on most Glenair hermetics.

HERMETIC LEAK RATE MOD CODES	
Designator	**Required Leak Rate**
A	1 x 10^{-10} cc's Helium per second
B	1 x 10^{-9} cc's Helium per second
C	1 x 10^{-8} cc's Helium per second

Catalog Notes

For all parts in this catalog:

- All parts will be identified with manufacturer's name and part number, space permitting.
- Glenair 600 series backshell assembly tools are recommended for assembly and installation.
- Dimensions are subject to change without notice. Metric dimensions appear in parentheses in diagrams and tables, based on 1 inch = 25.4 mm, for reference only. Unless otherwise specified, the following other dimensional tolerances apply:

  .xx = ± .03 (0.8) Lengths = ± .060 (1.52)
  .xxx = ± .015 (0.4) Angles = ± 5°

Customers are advised to consult the factory for the latest specifications, particularly to confirm critical dimensions such as connector lengths, threads, and so on. When errors or mistakes are brought to our attention, corrected content is posted immediately to www.glenair.com.

© 2013 Glenair, Inc.

Glenair Hermetic Connector Products
Space Grade Mod Codes

What is outgassing?

Plastic and rubber materials give off gaseous molecules. For example, the smell inside a new car is caused by polymer outgassing. Heat and vacuum increase the rate of diffusion. In a spacecraft the gases coming off polymers can contaminate optical surfaces and instruments. The result is degraded performance.

How is outgassing measured?

The space industry has adopted a standardized test procedure, ***ASTM E 595***, to evaluate out-gassing properties of polymers. Small samples of material are heated to 125° C. at a vacuum of 5 X 10^{-5} torr for 24 hours. Then the sample is weighed to calculate the ***Total Mass Loss*** (TML). The TML cannot exceed 1.00% of the total initial mass. During the test, outgassed matter condenses on a cooled collector plate. The quantity of outgassed matter is caluclated to determine the ***Collected Volatile Condensable Material*** (CVCM). The CVCM cannot exceed 0.10% of the original specimen mass.

What is NASA screening?

NASA specification EEE-INST-002 provides instructions on selecting, screening and qualifying parts for use on NASA GSFC space flight projects.

What screening level is required?

NASA defines three levels of screening: level 1 for highest reliability, level 2 for high reliability, and level 3 for standard reliability. Level 3 equates to standard lot acceptance inspection. Levels 1 and 2 call for additional testing.

HOW TO ORDER SPACE GRADE CONNECTORS

Step 1: Find a Standard Part Number

Electroless nickel plated shells are preferred for space flight. Cadmium plating is prohibited.

Step 2: Select a NASA Screening Level

The term "Screening Level" refers to the final inspection procedure.

Level 1 for mission-critical highest reliability
Level 2 for high reliability
Level 3 for standard reliability

Step 3: Choose Outgassing Processing

A detailed explanation of outgassing is on the following pages. The fluorosilicone rubber seals commonly used on aerospace-grade connectors such as MIL-DTL-38999 and Series 79 connectors, along with certain bonding agents and inks, do not meet NASA outgassing requirements unless the connector is specially processed. Glenair outgassing tests have shown oven baking or thermal vacuum outgassing processing are sufficient to reduce outgassing levels to NASA standards. Oven baking is more economical than thermal vacuum outgassing.

Step 4: Select the Mod 429 Code that Matches the Desired Level of Screening and Outgassing

Use the following table to choose the right modification code. Add the mod code to the connector part number. Example: 790-024PC-13ML-***429C***

NASA SCREENING LEVELS AND MODIFICATION CODES

NASA Screening Level	Special Screening Only	Special Screening Plus Outgassing Processing	
		8 Hour Oven Bake 400° F.	Thermal Vacuum Outgassing 24 hrs. 125° C.
Level 1 Highest Reliability	Mod 429B	Mod 429J	Mod 429C
Level 2 High Reliability	Mod 429	Mod 429K	Mod 429A
Level 3 Standard Reliability	(Use standard part number)	Mod 186	Mod 186M

© 2013 Glenair, Inc.

MIL-DTL-83723 Series III Type
Threaded and Bayonet Coupling
Insert Arrangements and Keyway Positions

Insert Arrangements					
Shell Size Designator	Insert Arrangement Dash Number	Service Rating	Contact Size and Quantity		
			20	16	12
08	08-02	I	2		
	08-03	I	3		
	08-98	I	3		
10	10-02	I	2		
	10-05	I	5		
	10-06	I	6		
	10-20	I		2	
12	12-03	I		3	
	12-12	I	12		
14	14-03*	I		3*	
	14-04	I			4
	14-07	I		7	
	14-12	I	9	3	
	14-15	I	15		
16	16-10	I		10	
	16-24	I	24		
18	18-08	I			8
	18-11*	I		11*	
	18-14	I		14	
	18-31	I	31		
20	20-16	I		16	
	20-25	I	19		6
	20-28	I	24		4
	20-39	I	37	2	
	20-41	I	41		
22	22-12	I			12
	22-19	I		19	
	22-32	I	26		6
	22-39	I	27	12	
	22-55	I	55		
24	24-19	I			19
	24-43	I	23	20	
	24-57	I	55		2
	24-61	I	61		

*1 shielded.

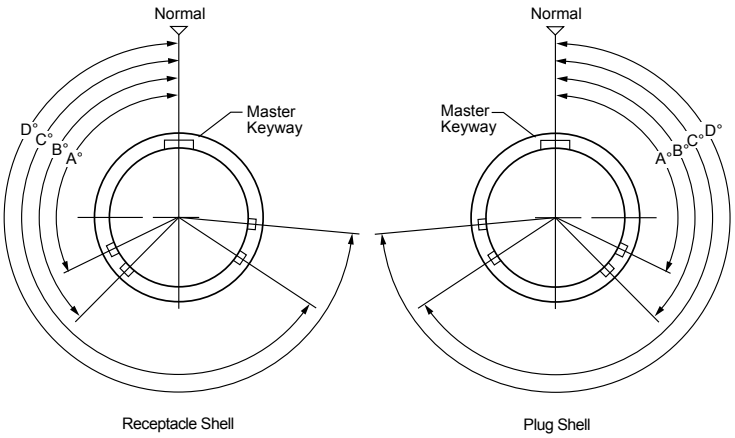

Keyway Positions (Front Face of Pin Insert)					
Shell Size	Keyway Position	A°	B°	C°	D°
08 through 10	Normal	105°	140°	215°	265°
	6	102°	132°	248°	320°
	7	80°	118°	230°	312°
	8	35°	140°	205°	275°
	9	64°	155°	234°	304°
	Y or 10	25°	115°	220°	270°
12 through 24	Normal	105°	140°	215°	265°
	6	18°	149°	192°	259°
	7	92°	152°	222°	342°
	8	84°	152°	204°	334°
	9	24°	135°	199°	240°
	Y or 10	98°	152°	268°	338°

Y Position not available for shell size 8.
Use "Y" when ordering military parts, "10" when ordering commercial parts

© 2013 Glenair, Inc.

230-023
MIL-DTL-83723/79 Series III Type Hermetic
Bayonet Coupling Square Flange Receptacle Connector with Solder Terminals

Connector Style
023 = Hermetic Square Flange Mount Receptacle

Insert Arrangement
Per MIL-STD-1554

Alternate Key Position
1,2,3,4,5,6,7,8,9, (Omit for Normal)

230	-	023	FT	12	-	3	P	1

Series 230 MIL-DTL-83723 Type

Material Designation
FT = Carbon Steel/ Tin Plated
Z1 = Stainless Steel/ Passivated

Shell Size

Contact Type
P = Solder Cup

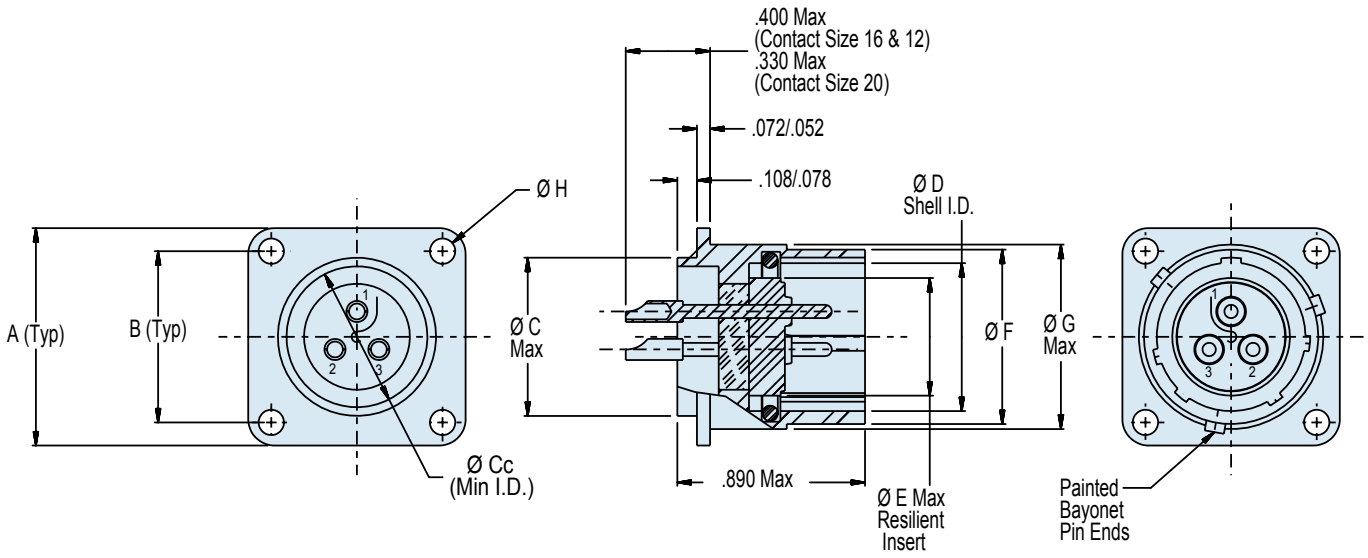

APPLICATION NOTES

1. To be identified with manufacturer's name, part number and date code, space permitting.
2. Material/Finish:
   Shell*:
   Z1 - Stainless steel/passivated.
   FT - Carbon steel/tin plated.
   Contacts - 52 Nickel alloy/gold plated.
   Bayonets - Stainless steel/passivated.
   Seals - Silicone elastomer/N.A.
   Insulation - Glass/N.A.
3. Glenair 230-023 will mate with any QPL MIL-DTL-83723/75 & 77 Series III bayonet coupling plug of same size, keyway, and insert polarization.
4. Performance:
   Hermeticity - <1 x 10^{-7} cc He/sec @ 1 atmosphere differential.
   Dielectric withstanding voltage - Consult factory or MIL-STD-1554.
   Insulation resistance - 5000 MegOhms min. @ 500VDC.
5. Consult factory and/or MIL-STD-1554 for arrangement, keyway, and insert position options.
6. Metric Dimensions (mm) are indicated in parentheses.

* Additional shell materials available, including titanium and Inconel®. Consult factory for ordering information.

© 2013 Glenair, Inc.

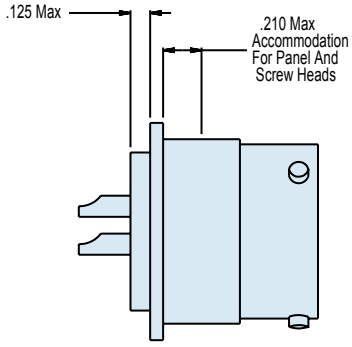

Max Panel Thickness

HERMETIC LEAK RATE MOD CODES	
Designator	**Required Leak Rate**
–585A	1 x 10^{-10} cc Helium per second
–585B	1 x 10^{-9} cc Helium per second
–585C	1 x 10^{-8} cc Helium per second

TABLE I: CONNECTOR AND CUT-OUT DIMENSIONS

Shell Size	A	B	C Dia Max	D Dia Shell I.D.	E Dia Resilient Insert	F Dia	G Dia Max	H Dia Thru 4 Pl	CC Dia Min	Panel Cut-Out Ø C	Panel Cut-Out Ø G
8	.812 (20.6)	.594 (15.1)	.500 (12.7)	.433/.428 (11.0/10.9)	.312 (7.9)	.536/.531 (13.6/13.5)	.561 (14.2)	.120 (3.0)	.406 (10.3)	.630/.620 (16.0/15.7)	.515/.505 (13.1/12.8)
10	.937 (23.8)	.719 (18.3)	.562 (14.3)	.535/.530 (13.6/13.5)	.388 (9.9)	.659/.654 (16.7/16.6)	.696 (17.7)	.120 (3.0)	.443 (11.3)	.758/.748 (19.3/19.0)	.582/.572 (14.8/14.5)
12	1.031 (26.2)	.812 (20.6)	.750 (19.1)	.705/.700 (17.9/17.8)	.558 (14.2)	.829/.824 (21.1/20.9)	.875 (22.2)	.120 (3.0)	.668 (17.0)	.923/.913 (23.4/23.2)	.770/.760 (19.6/19.3)
14	1.125 (28.6)	.906 (23.0)	.812 (20.6)	.774/.769 (19.7/19.5)	.627 (15.9)	.898/.893 (22.8/22.7)	.935 (23.7)	.120 (3.0)	.668 (17.0)	.990/.980 (25.1/248)	.832/.822 (21.1/20.9)
16	1.250 (31.8)	.969 (24.6)	.937 (23.8)	.901/.896 (22.9/22.8)	.772 (19.6)	1.025/1.020 (26.0/25.9)	1.062 (27.0)	.120 (3.0)	.763 (19.4)	1.117/1.107 (28.4/28.1)	.958/.948 (24.3/24.1)
18	1.343 (34.1)	1.062 (27.0)	1.062 (27.0)	1.007/1.002 (25.6/25.5)	.860 (21.8)	1.131/1.126 (28.7/28.6)	1.187 (30.1)	.120 (3.0)	.862 (21.9)	1.219/1.209 (31.0/30.7)	1.082/1.072 (27.5/27.2)
20	1.437 (36.5)	1.156 (29.4)	1.187 (30.1)	1.132/1.125 (28.8/28.6)	.985 (25.0)	1.256/1.251 (31.9/31.8)	1.312 (33.3)	.120 (3.0)	1.108 (28.1)	1.347/1.337 (34.2/34.0)	1.202/1.192 (30.5/30.3)
22	1.562 (39.7)	1.250 (31.8)	1.312 (33.3)	1.257/1.252 (31.9/31.8)	1.110 (28.2)	1.381/1.376 (35.1/35.0)	1.437 (36.5)	.120 (3.0)	1.204 (30.6)	1.462/1.452 (37.1/36.9)	1.332/1.322 (33.8/33.6)
24	1.703 (43.3)	1.375 (34.9)	1.437 (36.5)	1.382/1.377 (35.1/35.0)	1.235 (31.4)	1.506/1.501 (38.3/38.1)	1.562 (39.7)	.149 (3.8)	1.388 (35.3)	1.587/1.577 (40.3/40.1)	1.452/1.442 (36.9/36.6)

© 2013 Glenair, Inc.

230-024
MIL-DTL-83723/80 Series III Type Hermetic
Bayonet Coupling Solder Flange Mount Receptacle with Solder Cup Terminals

230	-	024	FT	12	-	3	P	1
Series 230 MIL-DTL-83723 Type		Connector Style: *024* = Hermetic Solder Flange Mount Receptacle	Material Designation: *FT* = Carbon Steel/ Tin Plated; *ZL* = Stainless Steel/ Nickel Plated; *Z1* = Stainless Steel/ Passivated	Shell Size		Insert Arrangement: Per MIL-STD-1554	Contact Type: *P* = Solder Cup	Alternate Key Position: *1,2,3,4,5,6,7,8,9,* (Omit for Normal)

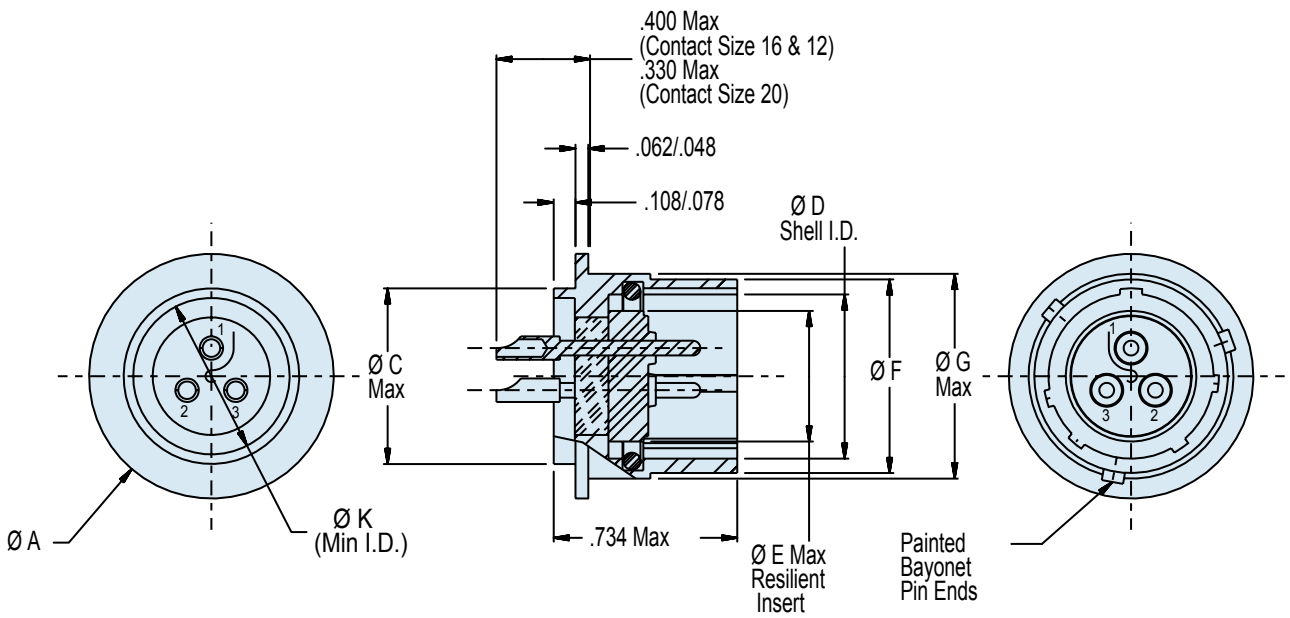

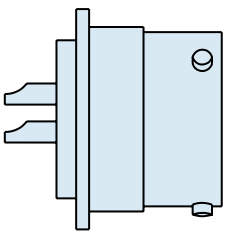

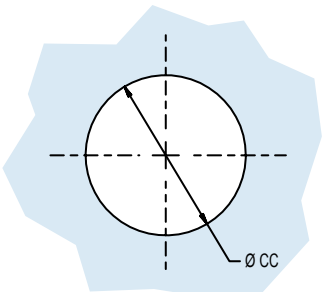

Panel Cut Out

© 2013 Glenair, Inc.

HERMETIC LEAK RATE MOD CODES	
Designator	**Required Leak Rate**
–585A	1 x 10^{-10} cc Helium per second
–585B	1 x 10^{-9} cc Helium per second
–585C	1 x 10^{-8} cc Helium per second

TABLE I: CONNECTOR AND CUT-OUT DIMENSIONS

Shell Size	A	C Dia Max	D Dia Shell I.D.	E Dia Resilient Insert	F Dia	G Dia Max	K Dia Min	Panel Cut-Out Ø CC
8	.760/.720 (19.3/18.3)	.500 (12.7)	.433/.428 (11.0/10.9)	.312 (7.9)	.536/.531 (13.6/13.5)	.561 (14.2)	.406 (10.3)	.515/.505 (13.1/12.8)
10	.860/.820 (21.8/20.8)	.562 (14.3)	.535/.530 (13.6/13.5)	.388 (9.9)	.659/.654 (16.7/16.6)	.696 (17.7)	.443 (11.3)	.577/.567 (14.7/14.4)
12	1.065/1.025 (27.1/26.0)	.750 (19.1)	.705/.700 (17.9/17.8)	.558 (14.2)	.829/.824 (21.1/20.9)	.875 (22.2)	.668 (17.0)	.765/.755 (19.4/19.2)
14	1.110/1.070 (28.2/27.2)	.812 (20.6)	.774/.769 (19.7/19.5)	.627 (15.9)	.898/.893 (22.8/22.7)	.935 (23.7)	.668 (17.0)	.827/.812 (21.0/20.6)
16	1.230/1.190 (31.2/30.2)	.937 (23.8)	.901/.896 (22.9/22.8)	.772 (19.6)	1.025/1.020 (26.0/25.9)	1.062 (27.0)	.763 (19.4)	.962/.942 (24.4/23.9)
18	1.360/1.320 (34.5/33.5)	1.062 (27.0)	1.007/1.002 (25.6/25.5)	.860 (21.8)	1.131/1.126 (28.7/28.6)	1.187 (30.1)	.862 (21.9)	1.077/1.067 (27.4/27.1)
20	1.450/1.410 (36.8/35.8)	1.187 (30.1)	1.132/1.125 (28.8/28.6)	.985 (25.0)	1.256/1.251 (31.9/31.8)	1.312 (33.3)	1.108 (28.1)	1.202/1.192 (30.5/30.3)
22	1.610/1.570 (40.9/39.9)	1.312 (33.3)	1.257/1.252 (31.9/31.8)	1.110 (28.2)	1.381/1.376 (35.1/35.0)	1.437 (36.5)	1.204 (30.6)	1.327/1.317 (33.7/33./5)
24	1.730/1.690 (43.9/42.9)	1.437 (36.5)	1.382/1.377 (35.1/35.0)	1.235 (31.4)	1.506/1.501 (38.3/38.1)	1.562 (39.7)	1.388 (35.3)	1.452/1.442 (36.9/36.6)

APPLICATION NOTES

1. To be identified with manufacturer's name, part number and date code, space permitting.
2. Material/Finish*:
   Shell:
   Z1 - Stainless steel/passivated
   ZL - Stainless steel/Nickel Plated
   FT - Carbon steel/tin plated
   Contacts - 52 Nickel alloy/gold plated
   Bayonets - Stainless steel/passivated
   Seals - Silicone elastomer/N.A.
   Insulation - Glass/N.A.
3. Glenair 230-024 will mate with any QPL MIL-DTL-83723/75 & 77 Series III bayonet coupling plug of same size, keyway, and insert polarization.
4. Performance:
   Hermeticity <1 x 10^{-7} cc He/sec @ 1 atmosphere differential.
   Dielectric withstanding voltage - Consult factory or MIL-STD-1554.
   Insulation resistance - 5000 MegOhms min @ 500VDC.
5. Consult factory and/or MIL-STD-1554 for arrangement, keyway, and insert position options.
6. Metric Dimensions (mm) are indicated in parentheses.

* Additional shell materials available, including titanium and Inconel®. Consult factory for ordering information.

© 2013 Glenair, Inc.

230-025
MIL-DTL-83723/81 Series III Type Hermetic
Bayonet Coupling Jam-Nut Mount Receptacle with Solder Cup Terminals

Connector Style
025 = Hermetic Single Hole Jam-Nut Mount Receptacle

Insert Arrangement
Per MIL-STD-1554

Alternate Key Position
1,2,3,4,5,6,7,8,9, (Omit for Normal)

230	-	025	FT	12	-	3	P	1

Series 230 MIL-DTL-83723 Type

Material Designation
FT = Carbon Steel/ Tin Plated
Z1 = Stainless Steel/ Passivated

Shell Size

Contact Type
P = Solder Cup

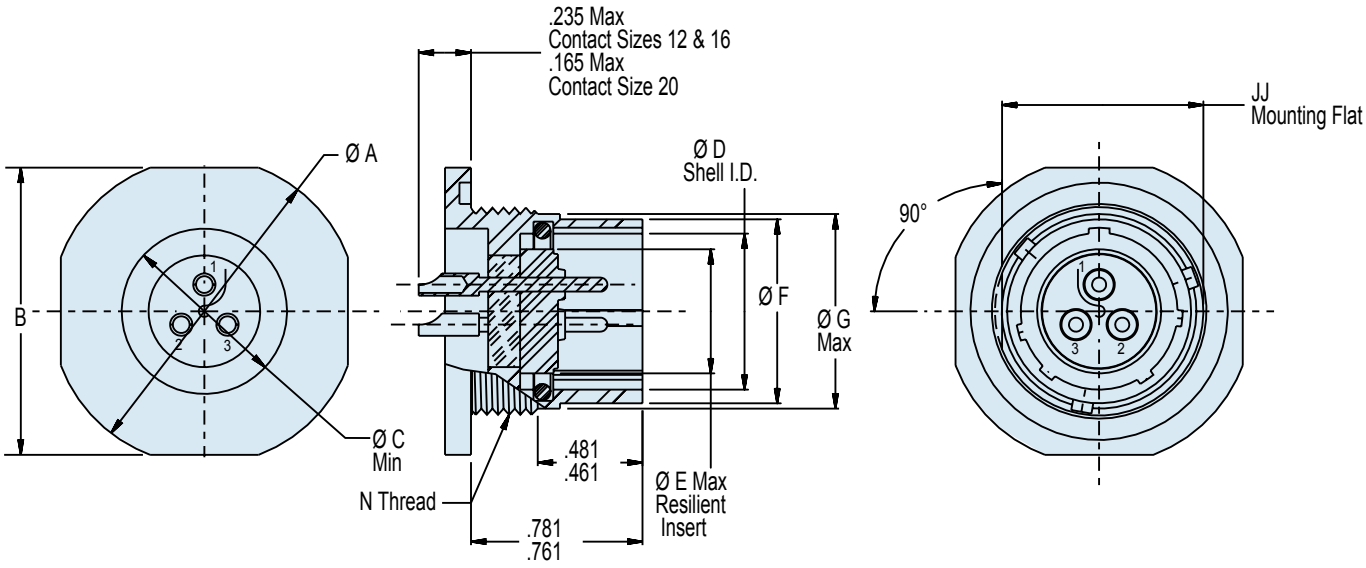

APPLICATION NOTES

1. To be identified with manufacturer's name, part number and date code, space permitting.
2. Material/Finish:
   Shell* and Jam-Nut:
   Z1 - Stainless steel/passivated.
   FT - Carbon steel/tin plated.
   Contacts - 52 Nickel alloy/gold plated.
   Bayonets - Stainless steel/passivated.
   Seals - Silicone elastomer/N.A.
   Insulation - Glass/N.A.
3. Glenair 230-025 will mate with any QPL MIL-DTL-83723/75 & 77 Series III bayonet coupling plug of same size, keyway, and insert polarization.
4. Performance:
   Hermeticity <1 x 10^{-7} cc He/sec @ 1 atmosphere differential.
   Dielectric withstanding voltage - Consult factory or MIL-STD-1554.
   Insulation resistance - 5000 MegOhms min @ 500VDC.
5. Consult factory and/or MIL-STD-1554 for arrangement, keyway, and insert position options.
6. Metric Dimensions (mm) are indicated in parentheses.

* Additional shell materials available, including titanium and Inconel®. Consult factory for ordering information.

© 2013 Glenair, Inc. U.S. CAGE Code 06324 Printed in U.S.A.

230-025
MIL-DTL-83723/81 Series III Type Hermetic
Bayonet Coupling Jam-Nut Mount Receptacle with Solder Cup Terminals

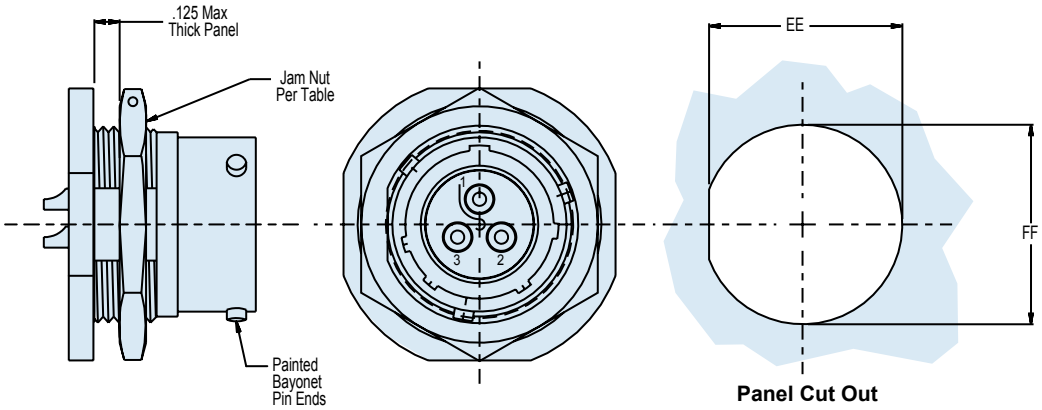

HERMETIC LEAK RATE MOD CODES	
Designator	**Required Leak Rate**
–585A	1 x 10^{-10} cc Helium per second
–585B	1 x 10^{-9} cc Helium per second
–585C	1 x 10^{-8} cc Helium per second

TABLE I: CONNECTOR AND CUT-OUT DIMENSIONS

Shell Size	A Dia Max	B	C Dia Min	D Dia Shell I.D.	E Dia Resilient Insert	F Dia	G Dia Max	N Thread	JJ Mounting Flat	Panel Cut-Out EE +.000 -.002 (.05)	Panel Cut-Out FF DIA ±.005 (0.1)	Jam Nut MS3186
8	1.068 (27.1)	.979 (24.9)	.493 (12.5)	.433/.428 (11.0/10.9)	.312 (7.9)	.536/.531 (13.6/13.5)	.561 (14.2)	.625-20 UN-2A	.596/.590 (15.1/15.0)	.605 (15.4)	.635 (16.1)	-105
10	1.192 (30.3)	1.104 (28.0)	.555 (14.1)	.535/.530 (13.6/13.5)	.388 (9.9)	.659/.654 (16.7/16.6)	.696 (17.7)	.750-20 UNEF-2A	.721/.715 (18.3/18.2)	.730 (18.5)	.760 (19.3)	-107
12	1.380 (35.1)	1.291 (32.8)	.743 (18.9)	.705/.700 (17.9/17.8)	.558 (14.2)	.829/.824 (21.1/20.9)	.875 (22.2)	.937-20 UNEF-2A	.908/.902 (23.1/22.9)	.917 (23.3)	.947 (24.1)	-110
14	1.505 (38.2)	1.391 (35.3)	.805 (20.4)	.774/.769 (19.7/19.5)	.627 (15.9)	.898/.893 (22.8/22.7)	.935 (23.7)	1.000-20 UNEF-2A	.971/.965 (24.7/24.5)	.980 (24.9)	1.010 (25.7)	-111
16	1.630 (41.4)	1.516 (38.5)	.931 (23.6)	.901/.896 (22.9/22.8)	.772 (19.6)	1.025/1.020 (26.0/25.9)	1.062 (27.0)	1.125-20 UNEF-2A	1.096/1.090 (27.8/27.7)	1.105 (28.1)	1.135 (32.1)	-112
18	1.765 (44.8)	1.641 (41.7)	1.055 (26.8)	1.007/1.002 (25.6/25.5)	.860 (21.8)	1.131/1.126 (28.7/28.6)	1.187 (30.1)	1.250-18 UNEF-2A	1.220/1.214 (31.0/30.8)	1.229 (31.2)	1.260 (32.0)	-116
20	1.860 (47.2)	1.766 (44.9)	1.243 (31.6)	1.132/1.125 (28.8/28.6)	.985 (25.0)	1.256/1.251 (31.9/31.8)	1.312 (33.3)	1.375-18 UNEF-2A	1.345/1.339 (34.2/34.0)	1.354 (34.4)	1.385 (35.2)	-117
22	2.068 (52.5)	1.954 (49.6)	1.305 (33.1)	1.257/1.252 (31.9/31.8)	1.110 (28.2)	1.381/1.376 (35.1/35.0)	1.437 (36.5)	1.500-18 UNEF-2A	1.470/1.464 (37.3/37.2)	1.479 (37.6)	1.510 (38.4)	-120
24	2.160 (54.9)	2.079 (52.8)	1.493 (37.9)	1.382/1.377 (35.1/35.0)	1.235 (31.4)	1.506/1.501 (38.3/38.1)	1.562 (39.7)	1.625-18 UNEF-2A	1.595/1.589 (40.5/40.4)	1.604 (40.7)	1.635 (41.5)	-121

© 2013 Glenair, Inc.

230-026
MIL-DTL-83723/93 Series III Type Hermetic
Bayonet Coupling Solder Flange Mount Receptacle with Straight Pin Contacts

Connector Style
026 = Hermetic Solder Flange Mount Receptacle

Insert Arrangement
Per MIL-STD-1554

Alternate Key Position
1,2,3,4,5,6,7,8,9, (Omit for Normal)

230	-	026	FT	12	-	3	C	1

Series 230 MIL-DTL-83723 Type

Material Designation
FT = Carbon Steel/ Tin Plated
Z1 = Stainless Steel/ Passivated

Shell Size

Contact Type
C = Straight Pin

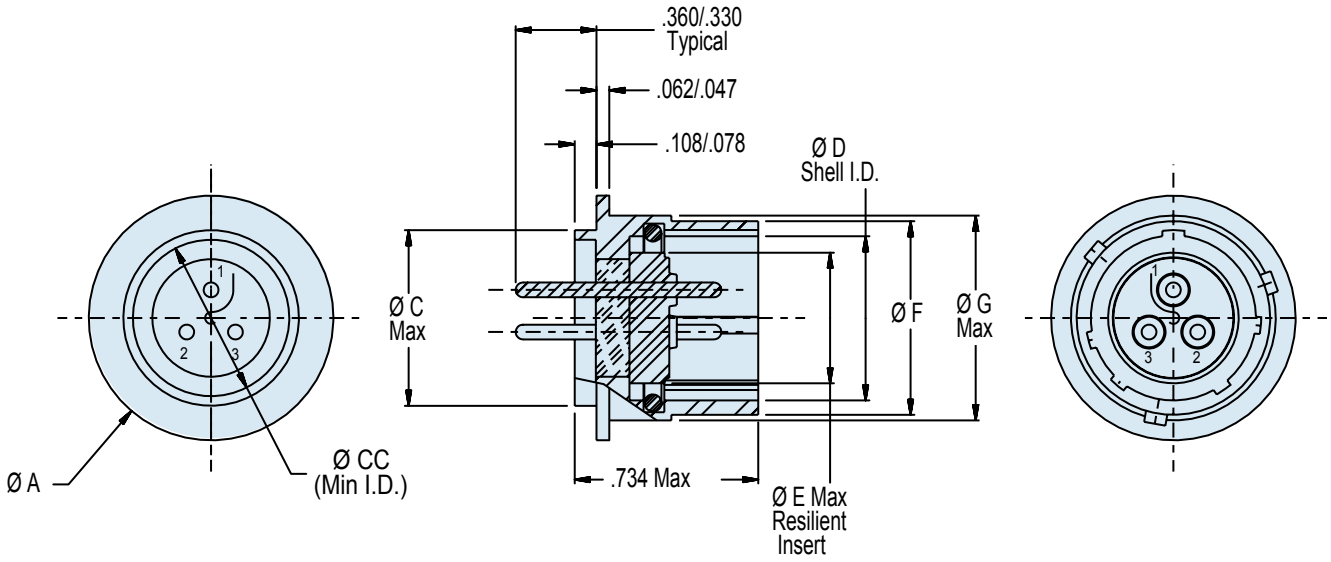

APPLICATION NOTES

1. To be identified with manufacturer's name, part number and date code, space permitting.
2. Material/Finish:
   Shell*:
   Z1 - Stainless steel/passivated.
   FT - Carbon steel/tin plated.
   Contacts - 52 Nickel alloy/gold plated.
   Bayonets - Stainless steel/passivated.
   Seals - Silicone elastomer/N.A.
   Insulation - Glass/N.A.
3. Glenair 230-026 will mate with any QPL MIL-DTL-83723/75 & 77 Series III bayonet coupling plug of same size, keyway, and insert polarization.
4. Performance:
   Hermeticity <1 x 10^{-7} cc He/sec @ 1 atmosphere differential.
   Dielectric withstanding voltage - Consult factory or MIL-STD-1554.
   Insulation resistance - 5000 MegOhms min @ 500VDC.
5. Consult factory and/or MIL-STD-1554 for arrangement, keyway, and insert position options.
6. Consult factory for PC tail footprints.
7. Metric Dimensions (mm) are indicated in parentheses.

* Additional shell materials available, including titanium and Inconel®. Consult factory for ordering information.

© 2013 Glenair, Inc.

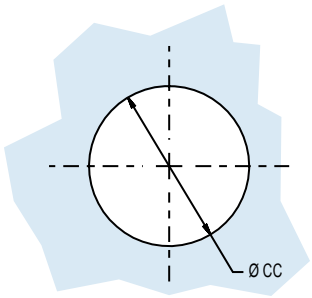

Panel Cut Out

HERMETIC LEAK RATE MOD CODES	
Designator	**Required Leak Rate**
–585A	1 x 10^{-10} cc Helium per second
–585B	1 x 10^{-9} cc Helium per second
–585C	1 x 10^{-8} cc Helium per second

TABLE I: CONNECTOR AND CUT-OUT DIMENSIONS

Shell Size	A Dia	C Dia Max	D Dia Shell I.D.	E Dia Resilient Insert	F Dia	G Dia Max	CC Dia Min	Ø CC Dia Panel Cut-Out
8	.760/.720 (19.3/18.3)	.500 (12.7)	.433/.428 (11.0/10.9)	.312 (7.9)	.536/.531 (13.6/13.5)	.561 (14.2)	.406 (10.3)	.515/.505 (13.1/12.8)
10	.860/.820 (21.8/20.8)	.562 (14.3)	.535/.530 (13.6/13.5)	.388 (9.9)	.659/.654 (16.7/16.6)	.696 (17.7)	.443 (11.3)	.577/.567 (14.7/14.4)
12	1.065/1.025 (27.1/26.0)	.750 (19.1)	.705/.700 (17.9/17.8)	.558 (14.2)	.829/.824 (21.1/20.9)	.875 (22.2)	.668 (17.0)	.765/.755 (19.4/19.2)
14	1.110/1.070 (28.2/27.2)	.812 (20.6)	.774/.769 (19.7/19.5)	.627 (15.9)	.898/.893 (22.8/22.7)	.935 (23.7)	.668 (17.0)	.827/.812 (21.0/20.6)
16	1.230/1.190 (31.2/30.2)	.937 (23.8)	.901/.896 (22.9/22.8)	.772 (19.6)	1.025/1.020 (26.0/25.9)	1.062 (27.0)	.763 (19.4)	.962/.942 (24.4/23.9)
18	1.360/1.320 (34.5/33.5)	1.062 (27.0)	1.007/1.002 (25.6/25.5)	.860 (21.8)	1.131/1.126 (28.7/28.6)	1.187 (30.1)	.862 (21.9)	1.077/1.067 (27.4/27.1)
20	1.450/1.410 (36.8/35.8)	1.187 (30.1)	1.132/1.125 (28.8/28.6)	.985 (25.0)	1.256/1.251 (31.9/31.8)	1.312 (33.3)	1.108 (28.1)	1.202/1.192 (30.5/30.3)
22	1.610/1.570 (40.9/39.9)	1.312 (33.3)	1.257/1.252 (31.9/31.8)	1.110 (28.2)	1.381/1.376 (35.1/35.0)	1.437 (36.5)	1.204 (30.6)	1.327/1.317 (33.7/33./5)
24	1.730/1.690 (43.9/42.9)	1.437 (36.5)	1.382/1.377 (35.1/35.0)	1.235 (31.4)	1.506/1.501 (38.3/38.1)	1.562 (39.7)	1.388 (35.3)	1.452/1.442 (36.9/36.6)

© 2013 Glenair, Inc. U.S. CAGE Code 06324 Printed in U.S.A.

230-027
MIL-DTL-83723/94 Series III Type Hermetic
Bayonet Coupling Jam-Nut Mount Receptacle with Straight Pin (All Sizes) or PCB (Size 20 Only) Contacts

Connector Style
027 = Hermetic Single Hole Jam-Nut Mount Receptacle

Insert Arrangement
Per MIL-STD-1554

Alternate Key Position
1,2,3,4,5,6,7,8,9, (Omit for Normal)

230	-	027	FT	12	-	3	C	1

Series 230 MIL-DTL-83723 Type

Material Designation
FT = Carbon Steel/ Tin Plated
Z1 = Stainless Steel/ Passivated

Shell Size

Contact Type
C = Straight Pin
PC = Flex Circuit Pin, Size 20 Only.

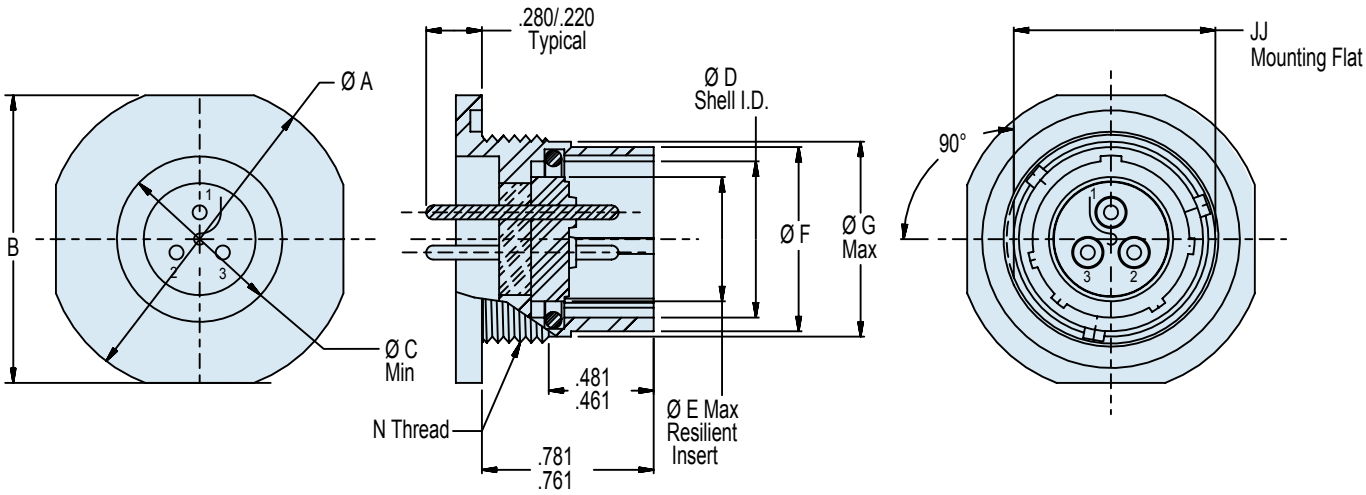

APPLICATION NOTES

1. To be identified with manufacturer's name, part number and date code, space permitting.
2. Material/Finish:
   Shell* and Jam-Nut:
   Z1 - Stainless steel/passivated.
   FT - Carbon steel/tin plated.
   Contacts - 52 Nickel alloy/gold plated.
   Bayonets - Stainless steel/passivated.
   Seals - Silicone elastomer/N.A.
   Insulation - Glass/N.A.
3. Glenair 230-027 will mate with any QPL MIL-DTL-83723/75 & 77 Series III bayonet coupling plug of same size, keyway, and insert polarization.
4. Performance:
   Hermeticity <1 x 10^{-7} cc He/sec @ 1 atmosphere differential.
   Dielectric withstanding voltage - Consult factory or MIL-STD-1554.
   Insulation resistance - 5000 MegOhms min @ 500VDC.
5. Consult factory and/or MIL-STD-1554 for arrangement, keyway, and insert position options.
6. Consult factory for PC tail footprints.
7. Metric Dimensions (mm) are indicated in parentheses.

* Additional shell materials available, including titanium and Inconel®. Consult factory for ordering information.

© 2013 Glenair, Inc.

230-027
MIL-DTL-83723/94 Series III Type Hermetic
Bayonet Coupling Jam-Nut Mount Receptacle with Straight Pin (All Sizes) or PCB (Size 20 Only) Contacts

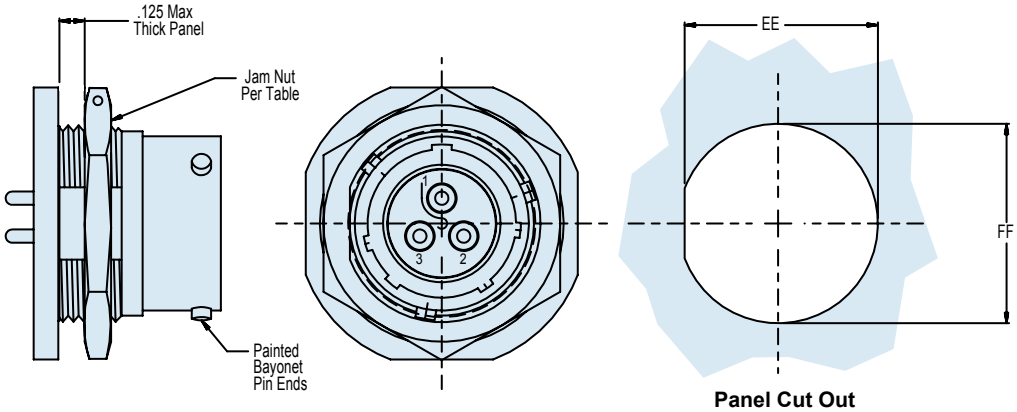

Panel Cut Out

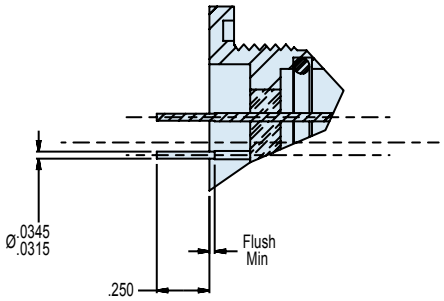

Flex Circuit Contact Detail

HERMETIC LEAK RATE MOD CODES	
Designator	**Required Leak Rate**
–585A	1 x 10^{-10} cc Helium per second
–585B	1 x 10^{-9} cc Helium per second
–585C	1 x 10^{-8} cc Helium per second

TABLE I: CONNECTOR AND CUT-OUT DIMENSIONS

Shell Size	A Dia Max	B	C Dia Min	D Dia Shell I.D.	E Dia Resilient Insert	F Dia	G Dia Max	N Thread	JJ Mounting Flat	Panel Cut-Out EE +.000 -.002 (.05)	Panel Cut-Out FF DIA ±.005 (0.1)	Jam Nut MS3186
8	1.068 (27.1)	.979 (24.9)	.493 (12.5)	.433/.428 (11.0/10.9)	.312 (7.9)	.536/.531 (13.6/13.5)	.561 (14.2)	.625-20 UN-2A	.596/.590 (15.1/15.0)	.605 (15.4)	.635 (16.1)	-105
10	1.192 (30.3)	1.104 (28.0)	.555 (14.1)	.535/.530 (13.6/13.5)	.388 (9.9)	.659/.654 (16.7/16.6)	.696 (17.7)	.750-20 UNEF-2A	.721/.715 (18.3/18.2)	.730 (18.5)	.760 (19.3)	-107
12	1.380 (35.1)	1.291 (32.8)	.743 (18.9)	.705/.700 (17.9/17.8)	.558 (14.2)	.829/.824 (21.1/20.9)	.875 (22.2)	.937-20 UNEF-2A	.908/.902 (23.1/22.9)	.917 (23.3)	.947 (24.1)	-110
14	1.505 (38.2)	1.391 (35.3)	.805 (20.4)	.774/.769 (19.7/19.5)	.627 (15.9)	.898/.893 (22.8/22.7)	.935 (23.7)	1.000-20 UNEF-2A	.971/.965 (24.7/24.5)	.980 (24.9)	1.010 (25.7)	-111
16	1.630 (41.4)	1.516 (38.5)	.931 (23.6)	.901/.896 (22.9/22.8)	.772 (19.6)	1.025/1.020 (26.0/25.9)	1.062 (27.0)	1.125-20 UNEF-2A	1.096/1.090 (27.8/27.7)	1.105 (28.1)	1.135 (32.1)	-112
18	1.765 (44.8)	1.641 (41.7)	1.055 (26.8)	1.007/1.002 (25.6/25.5)	.860 (21.8)	1.131/1.126 (28.7/28.6)	1.187 (30.1)	1.250-18 UNEF-2A)	1.220/1.214 (31.0/30.8)	1.229 (31.2)	1.260 (32.0)	-116
20	1.860 (47.2)	1.766 (44.9)	1.243 (31.6)	1.132/1.125 (28.8/28.6)	.985 (25.0)	1.256/1.251 (31.9/31.8)	1.312 (33.3)	1.375-18 UNEF-2A	1.345/1.339 (34.2/34.0)	1.354 (34.4)	1.385 (35.2)	-117
22	2.068 (52.5)	1.954 (49.6)	1.305 (33.1)	1.257/1.252 (31.9/31.8)	1.110 (28.2)	1.381/1.376 (35.1/35.0)	1.437 (36.5)	1.500-18 UNEF-2A	1.470/1.464 (37.3/37.2)	1.479 (37.6)	1.510 (38.4)	-120
24	2.160 (54.9)	2.079 (52.8)	1.493 (37.9)	1.382/1.377 (35.1/35.0)	1.235 (31.4)	1.506/1.501 (38.3/38.1)	1.562 (39.7)	1.625-18 UNEF-2A	1.595/1.587 (40.5/40.3)	1.604 (40.7)	1.635 (41.5)	-121

© 2013 Glenair, Inc.

230-028
MIL-DTL-83723/88 Series III Type Hermetic
Threaded Coupling Square Flange Mount Receptacle with Solder Cup Terminations



Series 230 MIL-DTL-83723 Type	Connector Style	Material Designation	Shell Size	Insert Arrangement	Contact Type	Alternate Key Position
230 -	028 = Hermetic Square Flange Mount Receptacle	FT = Carbon Steel/Tin Plated Z1 = Stainless Steel/Passivated ZL = Stainless Steel/Nickel Plated	12 -	3 = Per MIL-STD-1554	P = Solder Cup	1 = 1,2,3,4,5,6,7,8,9, (Omit for Normal)

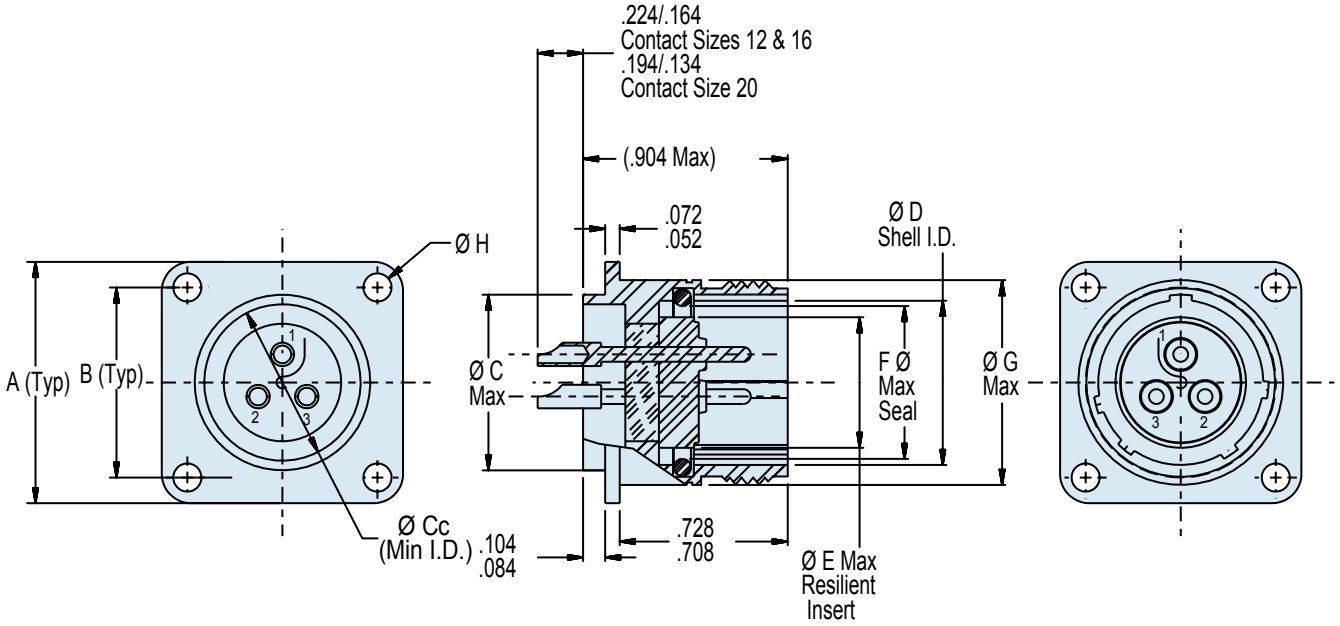

APPLICATION NOTES

1. To be identified with manufacturer's name, part number and date code, space permitting.
2. Material/Finish:
   Shell* and Jam-Nut:
   Z1 - Stainless steel/passivated.
   FT - Carbon steel/tin plated.
   ZL - Stainless steel/nickel plated.
   Contacts - 52 Nickel alloy/gold plated.
   Seals - Silicone elastomer/N.A.
   Insulation - Glass/N.A.
3. Glenair 230-028 will mate with any QPL MIL-DTL-83723/86, /91, /95 and /97 Series III bayonet coupling plug of same size, keyway, and insert polarization.
4. Performance:
   Hermeticity <1 x 10^{-7} cc He/sec @ 1 atmosphere differential.
   Dielectric withstanding voltage - Consult factory or MIL-STD-1554.
   Insulation resistance - 5000 MegOhms min @ 500VDC.
5. Consult factory and/or MIL-STD-1554 for arrangement, keyway, and insert position options.
6. Metric Dimensions (mm) are indicated in parentheses.

* Additional shell materials available, including titanium and Inconel®. Consult factory for ordering information.

© 2013 Glenair, Inc. U.S. CAGE Code 06324 Printed in U.S.A.

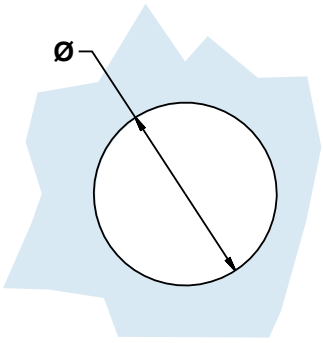

Panel Cut Out

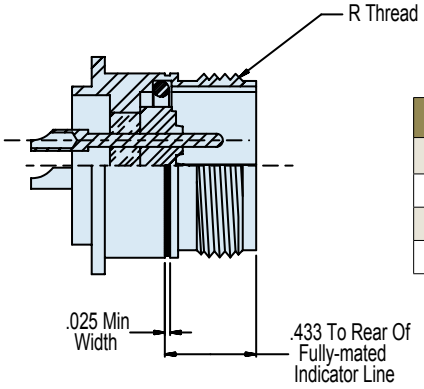

HERMETIC LEAK RATE MOD CODES	
Designator	**Required Leak Rate**
–585A	1 x 10^{-10} cc Helium per second
–585B	1 x 10^{-9} cc Helium per second
–585C	1 x 10^{-8} cc Helium per second

TABLE I: CONNECTOR AND CUT-OUT DIMENSIONS

Shell Size	A	B	C Dia	D Dia Shell I.D.	E Dia Resilient Insert	F Dia Max Seal	G Dia Max	H Dia Thru 4 Pl	CC Dia Min	R Coupling Thread UNEF-2A	Panel Cut-Out
8	.812 (20.6)	.594 (15.1)	.500/.494 (12.7/12.5)	.418/.413 (10.6/10.5)	.290 (7.4)	.394 (10.0)	.562 (14.3)	.125/.116 (3.2/2.9)	.400 (10.2)	.562-24	.572 (14.5)
10	.937 (23.8)	.719 (18.3)	.562/.556 (14.3/14.1)	.535/.530 (13.6/13.5)	.388 (9.9)	.515 (13.1)	.696 (17.7)	.125/.116 (3.2/2.9)	.411 (10.4)	.688-24	.706 (17.9)
12	1.031 (26.2)	.812 (20.6)	.750/.744 (19.1/18.9)	.705/.700 (17.9/17.8)	.558 (14.2)	.685 (17.4)	.875 (22.2)	.125/.116 (3.2/2.9)	.581 (14.8)	.875-20	.885 (22.5)
14	1.125 (28.6)	.906 (23.0)	.812/.806 (20.6/20.5)	.774/.769 (19.7/19.5)	.627 (15.9)	.754 (19.2)	.936 (23.8)	.125/.116 (3.2/2.9)	.650 (16.5)	.938-20	.946 (24.0)
16	1.250 (31.8)	.969 (24.6)	.937/.931 (23.8/23.6)	.901/.896 (22.9/22.8)	.772 (19.6)	.881 (22.4)	1.062 (27.0)	.125/.116 (3.2/2.9)	.777 (19.8)	1.062-18	1.072 (27.2)
18	1.343 (34.1)	1.062 (27.0)	1.062/1.056 (27.0/26.8)	1.007/1.002 (25.6/25.5)	.860 (21.8)	.987 (25.1)	1.187 (30.1)	.125/.116 (3.2/2.9)	.864 (21.9)	1.188-18	1.197 (30.4)
20	1.437 (36.5)	1.156 (29.4)	1.187/1.181 (30.1/30.0)	1.132/1.125 (28.8/28.6)	.985 (25.0)	1.112 (28.2)	1.312 (33.3)	.125/.116 (3.2/2.9)	1.034 (26.3)	1.312-18	1.322 (33.6)
22	1.562 (39.7)	1.250 (31.8)	1.312/1.306 (33.3/33.2)	1.257/1.252 (31.9/31.8)	1.110 (28.2)	1.237 (31.4)	1.437 (36.5)	.125/.116 (3.2/2.9)	1.133 (28.8)	1.438-18	1.447 (36.8)
24	1.703 (43.3)	1.375 (34.9)	1.437/1.431 (36.5/36.3)	1.382/1.377 (35.1/35.0)	1.235 (31.4)	1.362 (34.6)	1.562 (39.7)	.154/.145 (3.9/3.7)	1.284 (32.6)	1.562-18	1.572 (39.9)

© 2013 Glenair, Inc. U.S. CAGE Code 06324 Printed in U.S.A.

230-029
MIL-DTL-83723/89 Series III Type Hermetic
Threaded Coupling Jam-Nut Mount Receptacle with Solder Cup Terminations

Connector Style
029 = Hermetic Single Hole Jam-Nut Mount Receptacle

Shell Size

Insert Arrangement
Per MIL-STD-1554

Alternate Key Position
1,2,3,4,5,6,7,8,9,
(Omit for Normal)

230	-	029	FT	12	-	3	P	1

Series 230 MIL-DTL-83723 Type

Material Designation
FT = Carbon Steel/Tin Plated
Z1 = Stainless Steel/Passivated
ZL = Stainless Steel/Nickel Plated

Contact Type
P = Solder Cup

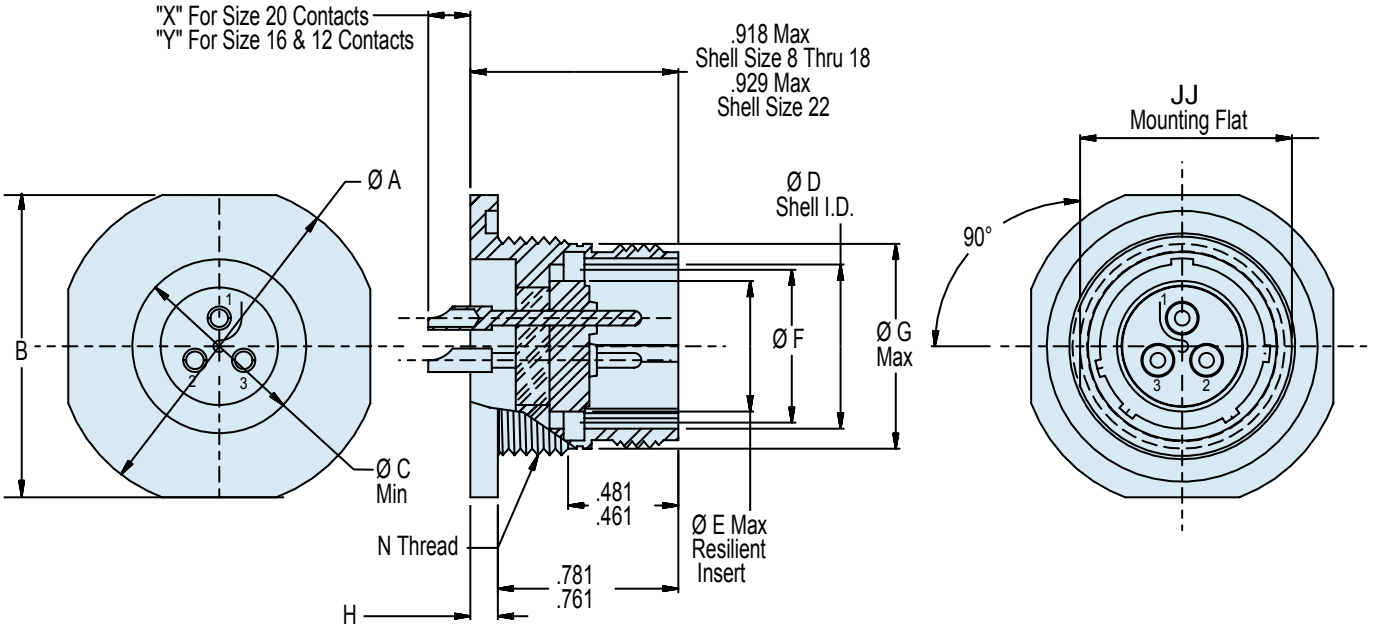

APPLICATION NOTES

1. To be identified with manufacturer's name, part number and date code, space permitting.
2. Material/Finish:
   Shell* and Jam-Nut:
   Z1 - Stainless steel/passivated.
   FT - Carbon steel/tin plated.
   ZL - Stainless steel/nickel plated.
   Contacts - 52 Nickel alloy/gold plated.
   Seals - Silicone elastomer/N.A.
   Insulation - Glass/N.A.
3. Glenair 230-029 will mate with any QPL MIL-DTL-83723/86, /91, /95 and /97 Series III bayonet coupling plug of same size, keyway, and insert polarization.
4. Performance:
   Hermeticity <1 x 10^{-7} cc He/sec @ 1 atmosphere differential.
   Dielectric withstanding voltage - Consult factory or MIL-STD-1554.
   Insulation resistance - 5000 MegOhms min @ 500VDC.
5. Consult factory and/or MIL-STD-1554 for arrangement, keyway, and insert position options.
6. Metric Dimensions (mm) are indicated in parentheses.

* Additional shell materials available, including titanium and Inconel®. Consult factory for ordering information.

© 2013 Glenair, Inc.
U.S. CAGE Code 06324
Printed in U.S.A.

230-029
MIL-DTL-83723/89 Series III Type Hermetic
Threaded Coupling Jam-Nut Mount Receptacle with Solder Cup Terminations

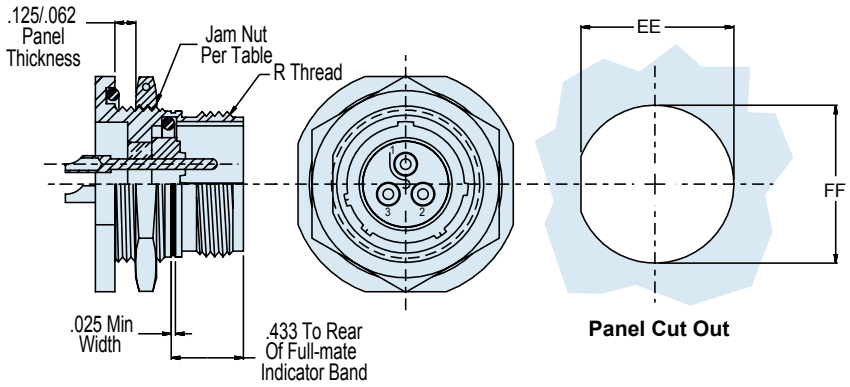

Panel Cut Out

HERMETIC LEAK RATE MOD CODES	
Designator	**Required Leak Rate**
–585A	1 x 10^{-10} cc Helium per second
–585B	1 x 10^{-9} cc Helium per second
–585C	1 x 10^{-8} cc Helium per second

E

TABLE I: CONNECTOR AND CUT-OUT DIMENSIONS (Continued Below)

Shell Size	A Dia Max	B	C Dia Min	D Dia Shell I.D.	E Dia Resilient Insert	F Dia Max Seal	G Dia Max	H Flange Thickness
8	1.078/1.047 (27.4/26.6)	.980/.949 (24.9/24.1)	.400 (10.2)	.418/.413 (10.6/10.5)	.290 (7.4)	.394 (10.0)	.562 (14.3)	.137/.097 (3.5/2.5)
10	1.192/1.162 (30.3/29.5)	1.104/1.073 (28.0/27.3)	.411 (10.4)	.535/.530 (13.6/13.5)	.388 (9.9)	.515 (13.1)	.696 (17.7)	.137/.097 (3.5/2.5)
12	1.380/1.349 (35.1/34.3)	1.291/1.260 (32.8/32.0)	.581 (14.8)	.705/.700 (17.9/17.8)	.558 (14.2)	.685 (17.4)	.875 (22.2)	.137/.097 (3.5/2.5)
14	1.516/1.485 (38.5/37.7)	1.391/1.360 (35.3/34.5)	.650 (16.5)	.774/.769 (19.7/19.5)	.627 (15.9)	.754 (19.2)	.936 (23.9)	.137/.097 (3.5/2.5)
16	1.641/1.610 (41.7/40.9)	1.516/1.485 (38.5/37.7)	.777 (19.7)	.901/.896 (22.9/22.8)	.772 (19.6)	.881 (22.4)	1.062 (27.0)	.137/.097 (3.5/2.5)
18	1.766/1.735 (44.9/44.1)	1.641/1.610 (41.7/40.9)	.864 (21.9)	1.007/1.002 (25.6/25.5)	.860 (21.8)	.987 (25.1)	1.187 (30.1)	.137/.097 (3.5/2.5)
22	2.078/2.047 (52.8/52.0)	1.954/1.923 (49.6/48.8)	1.133 (28.8)	1.257/1.252 (31.9/31.8)	1.110 (28.2)	1.237 (31.4)	1.437 (36.5)	.148/.128 (3.8/3.3)

TABLE I: CONNECTOR AND CUT-OUT DIMENSIONS (Continued From Above)

Shell Size	N Thread	R Thread	JJ Mounting Flat	Panel Cut-Out EE +.000 -.002 (.05)	Panel Cut-Out FF DIA ±.005 (0.1)	Jam Nut MS3186	X	Y
8	.625-20 UN-2A	.562-24 UNEF-2A	.596/.590 (15.1/15.0)	.605 (15.4)	.635 (16.1)	-105	.180/.120 (4.6/3.0)	.210/.150 (5.3/3.8)
10	.750-20 UNEF-2A	.688-24 UNEF-2A	.721/.715 (18.3/18.2)	.730 (18.5)	.760 (19.3)	-107	.180/.120 (4.6/3.0)	.210/.150 (5.3/3.8)
12	.937-20 UNEF-2A	.875-20 UNEF-2A	.908/.902 (23.1/22.9)	.917 (23.3)	.947 (24.1)	-110	.180/.120 (4.6/3.0)	.210/.150 (5.3/3.8)
14	1.000-20 UNEF-2A	.938-20 UNEF-2A	.971/.965 (24.7/24.5)	.980 (24.9)	1.010 (25.7)	-111	.180/.120 (4.6/3.0)	.210/.150 (5.3/3.8)
16	1.125-20 UNEF-2A	1.062-18 UNEF-2A	1.096/1.090 (27.8/27.7)	1.105 (28.1)	1.135 (32.1)	-112	.180/.120 (4.6/3.0)	.210/.150 (5.3/3.8)
18	1.250-18 UNEF-2A	1.188-18 UNEF-2A	1.220/1.214 (31.0/30.8)	1.230 (31.2)	1.260 (32.0)	-116	.180/.120 (4.6/3.0)	.210/.150 (5.3/3.8)
22	1.500-18 UNEF-2A	1.438-18 UNEF-2A	1.470/1.464 (37.3/37.2)	1.480 (37.6)	1.510 (38.4)	-120	.169/.109 (4.3/2.8)	.199/.139 (5.1/3.5)

© 2013 Glenair, Inc.

230-030
MIL-DTL-83723/90 Series III Type Hermetic
Threaded Coupling Solder Flange Mount Receptacle with Solder Cup Terminations

230	-	030	FT	12	-	3	P	1

Series 230 MIL-DTL-83723 Type

Connector Style
030 = Hermetic Solder Flange Mount Receptacle

Material Designation
FT = Carbon Steel/Tin Plated
Z1 = Stainless Steel/Passivated
ZL = Stainless Steel/Nickel Plated

Shell Size

Insert Arrangement
Per MIL-STD-1554

Contact Type
P = Solder Cup
X = Eyelet

Alternate Key Position
1,2,3,4,5,6,7,8,9,
(Omit for Normal)

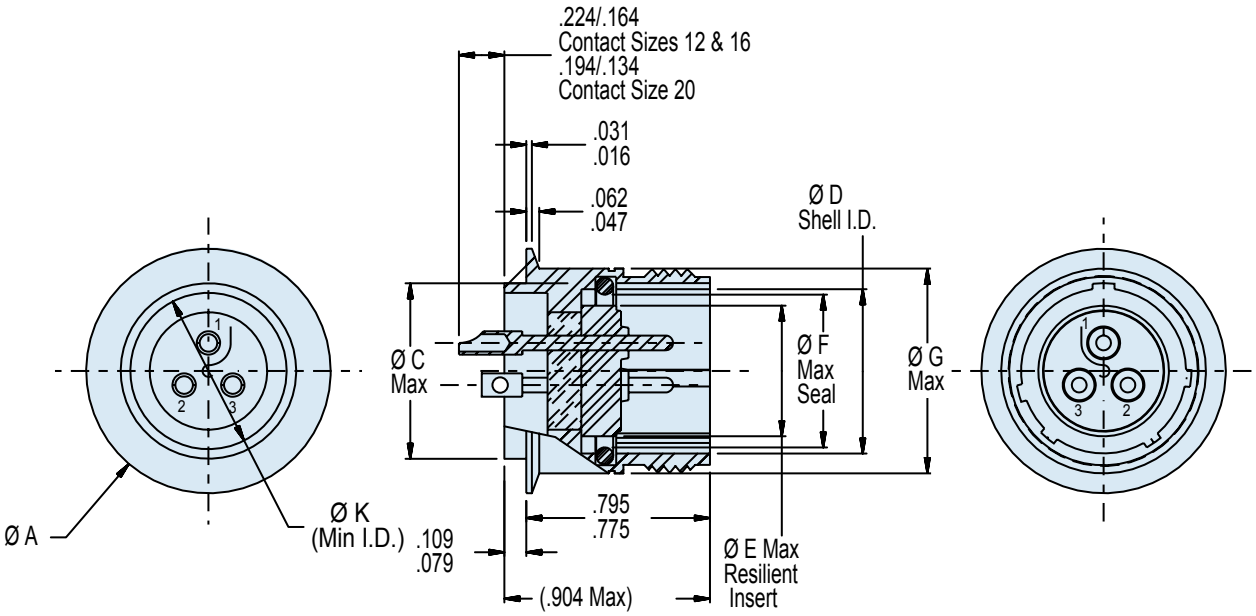

APPLICATION NOTES

1. To be identified with manufacturer's name, part number and date code, space permitting.
2. Material/Finish:
   Shell* and Jam-Nut:
   Z1 - Stainless steel/passivated.
   FT - Carbon steel/tin plated.
   ZL - Stainless steel/nickel plated.
   Contacts - 52 Nickel alloy/gold plated.
   Seals - Silicone elastomer/N.A.
   Insulation - Glass/N.A.
3. Glenair 230-030 will mate with any QPL MIL-DTL-83723/86, /91, /95 and /97 Series III threaded coupling plug of same size, keyway, and insert polarization.
4. Performance:
   Hermeticity <1 x 10^{-7} cc He/sec @ 1 atmosphere differential.
   Dielectric withstanding voltage - Consult factory or MIL-STD-1554.
   Insulation resistance - 5000 MegOhms min @ 500VDC.
5. Consult factory and/or MIL-STD-1554 for arrangement, keyway, and insert position options.
6. Metric Dimensions (mm) are indicated in parentheses.

* Additional shell materials available, including titanium and Inconel®. Consult factory for ordering information.

© 2013 Glenair, Inc.
U.S. CAGE Code 06324 Printed in U.S.A.

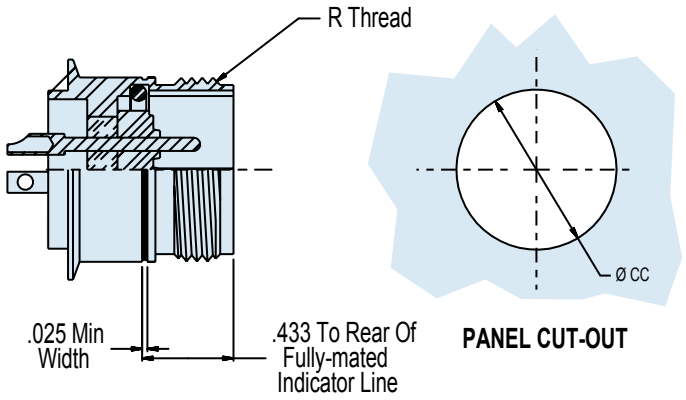

HERMETIC LEAK RATE MOD CODES	
Designator	**Required Leak Rate**
–585A	1 x 10^{-10} cc Helium per second
–585B	1 x 10^{-9} cc Helium per second
–585C	1 x 10^{-8} cc Helium per second

TABLE I: CONNECTOR AND CUT-OUT DIMENSIONS

Shell Size	A Dia	C Dia	D Dia Shell I.D.	E Dia Resilient Insert	F Dia Max Seal	G Dia Max	K Dia Min	Ø CC Panel Cut-Out	R Coupling Thread
8	.723/.703 (18.4/17.9)	.500/.494 (12.7/12.5)	.418/.413 (10.6/10.5)	.290 (7.4)	.394 (10.0)	.562 (14.3)	.400 (10.2)	.515/.505 (13.1/12.8)	.562-24 UNEF-2A
10	.850/.830 (21.6/21.1)	.562/.556 (14.3/14.1)	.535/.530 (13.6/13.5)	.388 (9.9)	.515 (13.1)	.696 (17.7)	.411 (10.4)	.577/.567 (14.7/14.4)	.688-24 UNEF-2A
12	1.055/1.035 (26.8/26.3)	.750/.744 (19.1/18.9)	.705/.700 (17.9/17.8)	.558 (14.2)	.685 (17.4)	.875 (22.2)	.581 (14.8)	.765/.755 (19.3/19.2)	.875-20 UNEF-2A
14	1.100/1.080 (27.9/27.4)	.812/.806 (20.6/20.5)	.774/.769 (19.7/19.5)	.627 (15.9)	.754 (19.2)	.936 (23.8)	.650 (16.5)	.827/.817 (21.0/20.8)	.938-20 UNEF-2A
16	1.220/1.200 (31.0/30.5)	.937/.931 (23.8/23.6)	.901/.896 (22.9/22.8)	.772 (19.6)	.881 (22.4)	1.062 (27.0)	.777 (19.7)	.952/.942 (24.2/23.9)	1.062-18 UNEF-2A
18	1.350/1.330 (34.3/33.8)	1.062/1.056 (27.0/26.8)	1.007/1.002 (25.6/25.5)	.860 (21.8)	.987 (25.1)	1.187 (30.1)	.864 (21.9)	1.077/1.067 (27.4/27.1)	1.188-18 UNEF-2A
22	1.600/1.580 (40.6/40.1)	1.312/1.306 (36.5/33.2)	1.257/1.252 (31.9/31.8)	1.110 (28.2)	1.237 (31.4)	1.437 (36.5)	1.133 (28.8)	1.327/1.317 (33.7/33.5)	1.438-18 UNEF-2A

© 2013 Glenair, Inc.

BAYONET AND THREADED

MIL-DTL-26500

Type Glass Seal Hermetic Connectors



The MIL-DTL-26500 type connector is ideally suited for use on commercial, military and aerospace interconnect systems that demand hermetic sealing and high vibration resistance in a medium density cylindrical connector. Thirty-four insert arrangements are available in both threaded and bayonet coupling styles for a wide range of applications. Glenair makes all its hermetic connectors in-house from design to finished product, affording you outstanding availability on stock products and fast turnaround on special orders.

GLASS-SEALED
Hermetic
CONNECTORS

Glenair®

Glenair, Inc.
1211 Air Way
Glendale, CA
91201-2497
818-247-6000
sales@glenair.com
www.glenair.com

Selected MIL-DTL-26500 Type Glass Sealed Hermetic Receptacles—Popular Connector Designs Superseded by MIL-DTL-83723

Glenair MIL-DTL-26500 Hermetic connectors are offered in either passivated stainless steel or fused tin over stainless steel, with glass insulators fused to the connector shell, and contacts meeting a leak rate of 1 X 10^{-7} cc/helium per second. Maximum design flexibility is built into the MIL-DTL-26500 hermetic connector– with a minimum of 2 to a maximum of 61 circuits per connector in a wide variety of contact arrangements IAW MIL-STD-1554.

Fluorosilicone elastomer interfacial and peripheral seals ensure positive sealing with plug connectors. Nickel-iron alloy 52 contacts—available in sizes 12, 16 and 20—depending on the layout chosen—offer a broad selection of insert arrangement options. Optional solder cup or eyelet contact terminations are standard. Contacts for other applications such as thermocouple or flex prints are also available.

Quick Selection Guide

Part Number	Description	Page
	MIL-DTL-26500 Type Insert Arrangements	F-2
	MIL-DTL-26500 Type Insert Arrangements and Keyway Positions	F-3
	Glenair Hermetic Connector Products Special Leak Rate Mod Codes	F-4
	Glenair Hermetic Connector Products Space Grade Mod Codes	F-5
	MIL-DTL-26500 Type Materials and Finishes	F-6
	MIL-DTL-26500 Type Bayonet and Threaded Coupling and Electrical Service Data	F-7
230-036 MS27034H*B**	MIL-DTL-26500 Type Bayonet Coupling Solder Flange Mount Receptacle	F-8
230-038 MS27034H*T**	MIL-DTL-26500 Type Threaded Coupling Solder Flange Mount Receptacle	F-10
230-039 MS24265*B**	MIL-DTL-26500 Type Bayonet Coupling Single Hole Mount Receptacle	F-12
230-040 MS24265H*T**	MIL-DTL-26500 Type Threaded Coupling Single Hole Mount Receptacle	F-14
230-041 MS24264H*B**	MIL-DTL-26500 Type Bayonet Coupling Square Flange Mount Receptacle	F-16
237-165	MIL-DTL-26500 Type Threaded Coupling Square Flange Mount Receptacle	F-18

© 2013 Glenair, Inc.

MIL-DTL-26500 Type
Hermetic Class Connectors
Threaded and Bayonet Coupling Insert Arrangements
(IAW MIL-STD-1554)

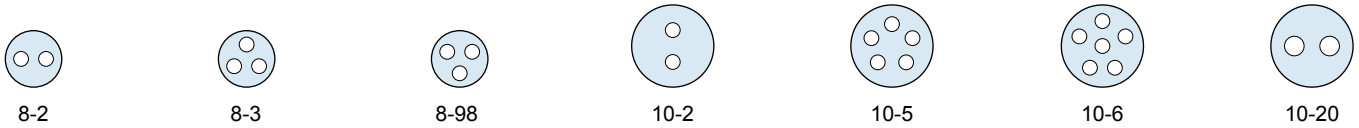
8-2 8-3 8-98 10-2 10-5 10-6 10-20

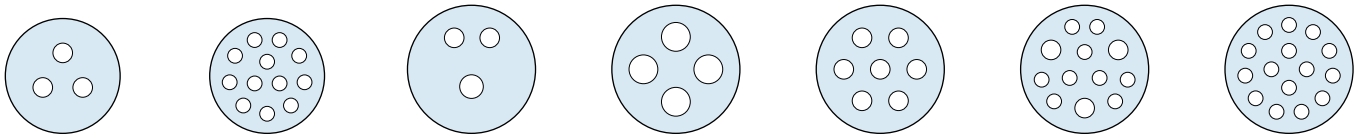
12-3 12-12 14-3 14-4 14-7 14-12 14-15

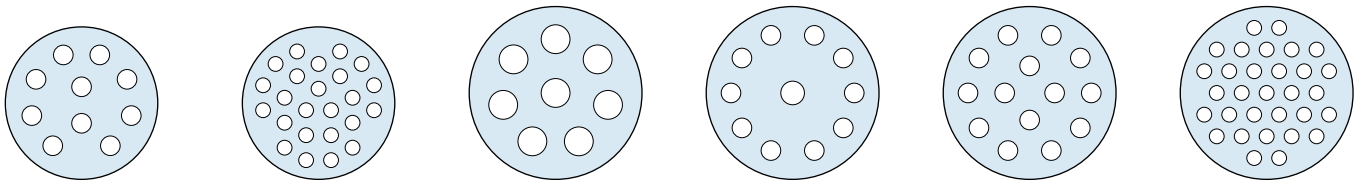
16-10 16-24 18-8 18-11 18-14 18-31

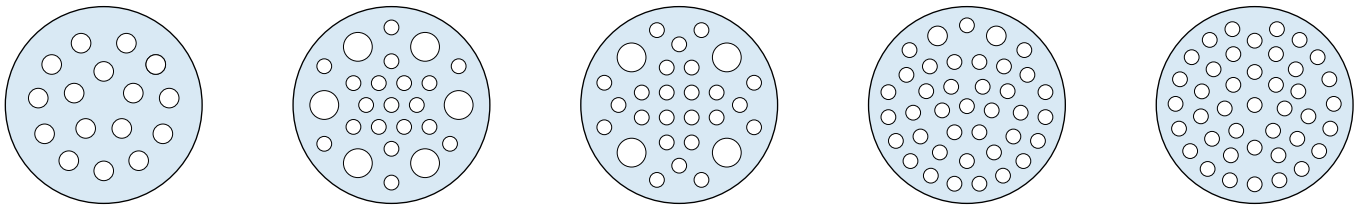
20-16 20-25 20-28 20-39 20-41

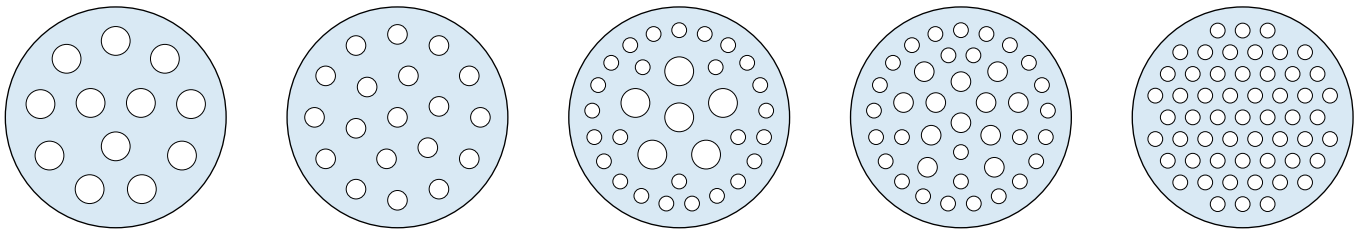
22-12 22-19 22-32 22-39 22-55

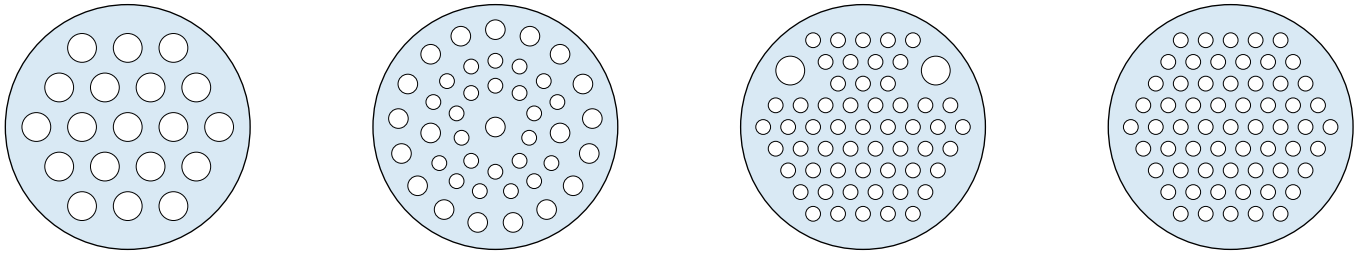
24-19 24-43 24-57 24-61

Dimensions in Inches (millimeters) are subject to change without notice.

© 2013 Glenair, Inc.
U.S. CAGE Code 06324
Printed in U.S.A.

MIL-DTL-26500 Type
Hermetic Class Connectors
Threaded and Bayonet Coupling Insert Arrangements and Keyway Positions (IAW MIL-STD-1554)

Insert Arrangements					
Shell Size Designator	Insert Arrangement Dash Number	Service Rating	Contact Size and Quantity		
			20	16	12
08	08-02	I	2		
	08-03	I	3		
	08-98	I	3		
10	10-02	I	2		
	10-05	I	5		
	10-06	I	6		
	10-20	I		2	
12	12-03	I		3	
	12-12	I	12		
14	14-03*	I		3*	
	14-04	I			4
	14-07	I		7	
	14-12	I	9	3	
	14-15	I	15		
16	16-10	I		10	
	16-24	I	24		
18	18-08	I			8
	18-11*	I		11*	
	18-14	I		14	
	18-31	I	31		
20	20-16	I		16	
	20-25	I	19		6
	20-28	I	24		4
	20-39	I	37	2	
	20-41	I	41		
22	22-12	I			12
	22-19	I		19	
	22-32	I	26		6
	22-39	I	27	12	
	22-55	I	55		
24	24-19	I			19
	24-43	I	23	20	
	24-57	I	55		2
	24-61	I	61		

*1 shielded.

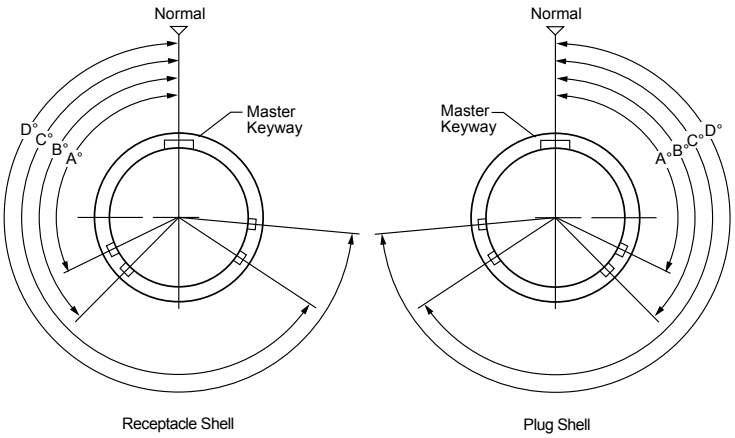

Keyway Positions (Front Face of Pin Insert)					
Shell Size	Keyway Position	A°	B°	C°	D°
08 through 10	Normal	105°	140°	215°	265°
	6	102°	132°	248°	320°
	7	80°	118°	230°	312°
	8	35°	140°	205°	275°
	9	64°	155°	234°	304°
	Y or 10	25°	115°	220°	270°
12 through 24	Normal	105°	140°	215°	265°
	6	18°	149°	192°	259°
	7	92°	152°	222°	342°
	8	84°	152°	204°	334°
	9	24°	135°	199°	240°
	Y or 10	98°	152°	268°	338°

Y Position not available for shell size 8.
Use "Y" when ordering military parts, "10" when ordering commercial parts

Dimensions in Inches (millimeters) are subject to change without notice.

© 2013 Glenair, Inc.
U.S. CAGE Code 06324
Printed in U.S.A.

Glenair Hermetic Connector Products
Special Leak Rate Mod Codes

Leak Rate Designator
B *– (See Table Below)*

– 585 B

Mod Code
585 *– Increased Hermeticity Mod Code*

What is the –585 Mod Code?

Glenair offers an array of hermetic connectors with more stringent leak rate requirements. By adding "**–585**" and the designator letter "**A**", "**B**" or "**C**"—depending on the hermeticity desired—to the end of a standard part number, connectors will be built to exceed the standard 1 x 10^{-7} cc Helium per second leak rate specified on most Glenair hermetics.

HERMETIC LEAK RATE MOD CODES

Designator	Required Leak Rate
A	1 x 10^{-10} cc's Helium per second
B	1 x 10^{-9} cc's Helium per second
C	1 x 10^{-8} cc's Helium per second

Catalog Notes

For all parts in this catalog:

- All parts will be identified with manufacturer's name and part number, space permitting.
- Glenair 600 series backshell assembly tools are recommended for assembly and installation.
- Dimensions are subject to change without notice. Metric dimensions appear in parentheses in diagrams and tables, based on 1 inch = 25.4 mm, for reference only. Unless otherwise specified, the following other dimensional tolerances apply:

  .xx = ± .03 (0.8) Lengths = ± .060 (1.52)
  .xxx = ± .015 (0.4) Angles = ± 5°

Customers are advised to consult the factory for the latest specifications, particularly to confirm critical dimensions such as connector lengths, threads, and so on. When errors or mistakes are brought to our attention, corrected content is posted immediately to www.glenair.com.

Dimensions in Inches (millimeters) are subject to change without notice.

© 2013 Glenair, Inc.

Glenair Hermetic Connector Products
Space Grade Mod Codes

What is outgassing?

Plastic and rubber materials give off gaseous molecules. For example, the smell inside a new car is caused by polymer outgassing. Heat and vacuum increase the rate of diffusion. In a spacecraft the gases coming off polymers can contaminate optical surfaces and instruments. The result is degraded performance.

How is outgassing measured?

The space industry has adopted a standardized test procedure, ***ASTM E 595***, to evaluate out-gassing properties of polymers. Small samples of material are heated to 125° C. at a vacuum of 5 X 10^{-5} torr for 24 hours. Then the sample is weighed to calculate the ***Total Mass Loss*** (TML). The TML cannot exceed 1.00% of the total initial mass. During the test, outgassed matter condenses on a cooled collector plate. The quantity of outgassed matter is caluclated to determine the ***Collected Volatile Condensable Material*** (CVCM). The CVCM cannot exceed 0.10% of the original specimen mass.

What is NASA screening?

NASA specification EEE-INST-002 provides instructions on selecting, screening and qualifying parts for use on NASA GSFC space flight projects.

What screening level is required?

NASA defines three levels of screening: level 1 for highest reliability, level 2 for high reliability, and level 3 for standard reliability. Level 3 equates to standard lot acceptance inspection. Levels 1 and 2 call for additional testing.

HOW TO ORDER SPACE GRADE CONNECTORS

Step 1: Find a Standard Part Number

Electroless nickel plated shells are preferred for space flight. Cadmium plating is prohibited.

Step 2: Select a NASA Screening Level

The term "Screening Level" refers to the final inspection procedure.

Level 1 for mission-critical highest reliability
Level 2 for high reliability
Level 3 for standard reliability

Step 3: Choose Outgassing Processing

A detailed explanation of outgassing is on the following pages. The fluorosilicone rubber seals commonly used on aerospace-grade connectors such as MIL-DTL-38999 and Series 79 connectors, along with certain bonding agents and inks, do not meet NASA outgassing requirements unless the connector is specially processed. Glenair outgassing tests have shown oven baking or thermal vacuum outgassing processing are sufficient to reduce outgassing levels to NASA standards. Oven baking is more economical than thermal vacuum outgassing.

Step 4: Select the Mod 429 Code that Matches the Desired Level of Screening and Outgassing

Use the following table to choose the right modification code. Add the mod code to the connector part number. Example: 790-024PC-13ML-***429C***

NASA SCREENING LEVELS AND MODIFICATION CODES

NASA Screening Level	Special Screening Only	Special Screening Plus Outgassing Processing	
		8 Hour Oven Bake 400° F.	Thermal Vacuum Outgassing 24 hrs. 125° C.
Level 1 Highest Reliability	Mod 429B	Mod 429J	Mod 429C
Level 2 High Reliability	Mod 429	Mod 429K	Mod 429A
Level 3 Standard Reliability	(Use standard part number)	Mod 186	Mod 186M

Dimensions in Inches (millimeters) are subject to change without notice.

© 2013 Glenair, Inc.
U.S. CAGE Code 06324
Printed in U.S.A.

MIL-DTL-26500 Type
Hermetic Class Connectors
Standard Materials and Finishes

TABLE I: HERMETIC CLASS MATERIALS	
Shell, Barrel Coupling Nut and Jam Nut (Hermetic)	Cold rolled steel per ASTM 108
Interfacial Seals and O-Rings	Fluorosilicone rubber
Contacts	Nickel-iron alloy per MIL-I-23011, Class 2
Bayonet Pins	Corrosion resistant steel per QQ-S-764, Type 303
Inserts	Glass

TABLE II: HERMETIC CLASS FINISHES			
Plating Code	**Material**	**Finish**	**Specification**
Glenair Commercial Equivalent Plating Codes			
Z1	Stainless Steel	Passivate	AMS-QQ-P-35
FT	Carbon Steel	Fused Tin Plate	ASTM-B545 or ASTM-B339
SM	Carbon Steel	Electroless Nickel	
ZL	Stainless Steel	Electrodeposited Nickel	SAE-AMS-QQ-N-290, Class 2
MIL-DTL-26500 Plating Codes			
D	Cold Rolled Steel	Fused Tin over Copper over Nickel	MIL-T-10727, MIL-C-14550, QQ-N-290
E	Stainless Steel	Passivate	QQ-S-764, Type 303
N	Stainless Steel	Electrodeposited Nickel	SAE-AMS-QQ-N-290, Class 2

*Additional materials are available, including titanium and Inconel®. Consult factory for ordering information.

© 2013 Glenair, Inc.

BAYONET COUPLING		
Description	**Military Designation**	**Glenair Designation**
Jam Nut Mount	MS24265H*B*CN MS24265H*B*EN	230-039 230-039
Solder Mount	MS247034H*B*CN MS27034H*B*EN	230-036 230-036
Square Flange	MS24264H*B*CN MS24264H*B*EN	230-041 230-041
Mating Plug	MS24266R*B*SN	

THREAD COUPLING		
Description	**Military Designation**	**Glenair Designation**
Jam Nut Mount	MS24265H*T*CN MS24265H*T*EN	230-040 230-040
Solder Mount	MS27034H*T*CN MS27034H*T*EN	230-038 230-038
Square Flange	MS24264H*T*CN MS24264H*T*EN	237-165 237-165
Mating Plug	MS24266R*T*SN	

F

Based on contact size, the maximum current carried by the connector is the same permitted by the wire bundle. Maximum current ratings and voltage drops demonstrated in tests of fully assembled connectors are shown in the following table:

ELECTRICAL SERVICE DATA		
Contact Size	**Test Current (Amps)**	**Potential Drop (Millivolts)**
20	5	100
16	10	95
12	17	95

Method 3001 of MIL-STF-1344 specifying high potential test voltage mandates that tested unmated connectors will not exceed 2 milliamperes in leakage and present no sign of electrical breakdown or flashover per the following table:

HIGH POTENTIAL TEST VOLTAGE	
Service Rating	**Test Voltage (RMS 60 CPS)**
1	1500

Dimensions in Inches (millimeters) are subject to change without notice.

© 2013 Glenair, Inc.
U.S. CAGE Code 06324
Printed in U.S.A.

Glenair®

230-036
MIL-DTL-26500 Type Hermetic Class Receptacle
MS27034H*B** Type Solder Flange Mount, Bayonet Coupling

How To Order: *Commercial*

230-036	Z1	12	-	3	P	6

Basic Series: 230-036

Connector Material / Finish
- *FT - Cold Rolled Steel - Fused Tin Finish*
- *Z1 - Stainless Steel - Passivate Finish*
- *ZL - Stainless Steel - Nickel Finish*

Shell Size *(See Table I)*: 12

Insert Arrangement
MIL-STD-1554
See Pages F-2 – F-3
: 3

Contact Termination
- *P - Pin, Solder Cup*
- *X - Pin, Eyelet*

: P

Alternate Key Position
6, 7, 8, 9, 10
(Omit for Normal)
: 6

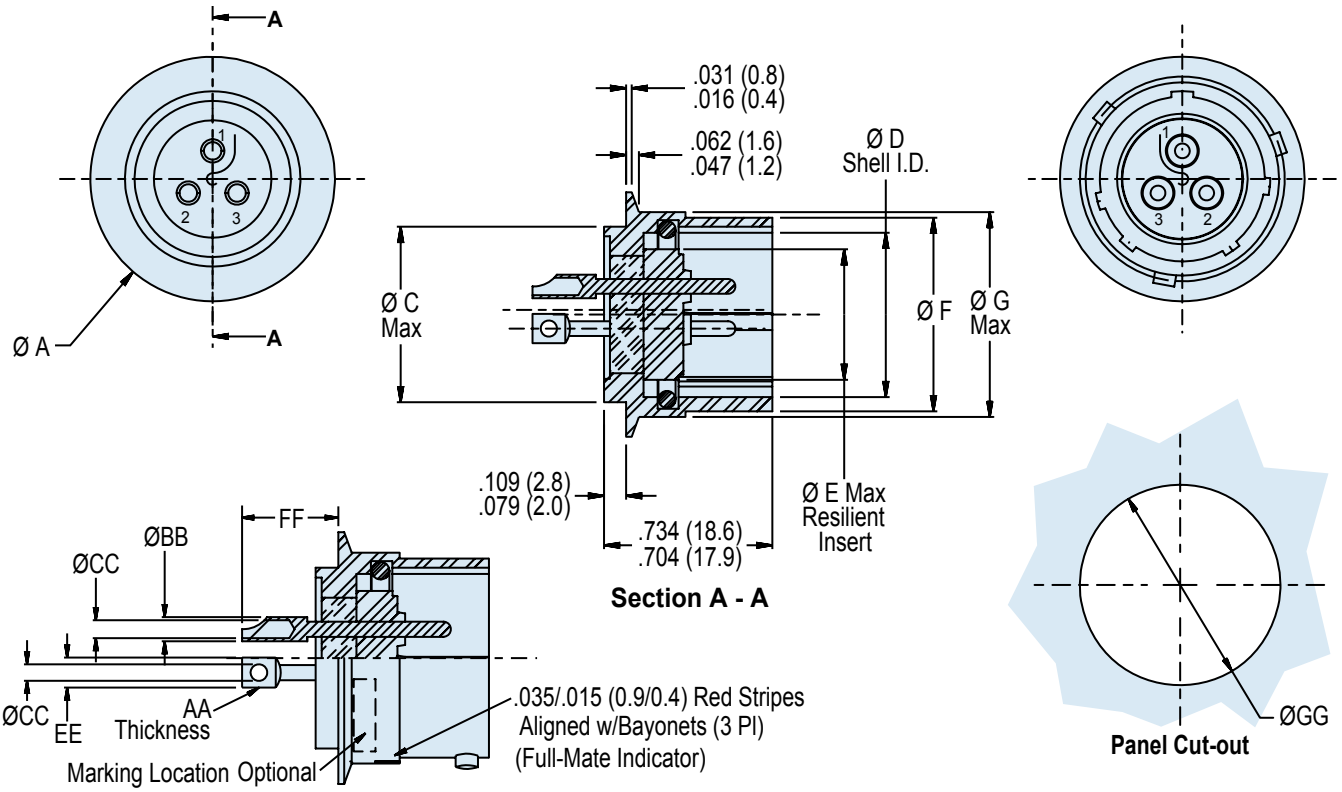

Dimensions in Inches (millimeters) are subject to change without notice.

© 2013 Glenair, Inc.
U.S. CAGE Code 06324
Printed in U.S.A.

TABLE I: Shell Size, Connector Dimensions and Panel Cut-Out							
Shell Size	Ø A	Ø C Max	Ø D Shell I.D.	Ø E Resilient Insert	Ø F	Ø G Max	Panel Cut-Out Ø GG
8	.725/.685 (18.4/17.4)	.437 (11.1)	.433/.428 (11.0/10.9)	.312 (7.9)	.536/.531 (13.6/13.5)	.561 (14.2)	.452/.442 (11.5/11.2)
10	.860/.820 (21.8/20.8)	.562 (14.3)	.535/.530 (13.6/13.5)	.388 (9.9)	.659/.654 (16.7/16.6)	.696 (17.7)	.577/.567 (14.7/14.4)
12	1.065/1.025 (27.1/26.0)	.750 (19.1)	.705/.700 (17.9/17.8)	.558 (14.2)	.829/.824 (21.1/20.9)	.875 (22.2)	.765/.755 (19.4/19.2)
14	1.110/1.070 (28.2/27.2)	.812 (20.6)	.774/.769 (19.7/19.5)	.627 (15.9)	.898/.893 (22.8/22.7)	.935 (23.7)	.827/.817 (21.0/20.8)
16	1.230/1.190 (31.2/30.2)	.937 (23.8)	.901/.896 (22.9/22.8)	.754 (19.2)	1.025/1.020 (26.0/25.9)	1.062 (27.0)	.952/.942 (24.2/23.9)
18	1.360/1.320 (34.5/33.5)	1.062 (27.0)	1.007/1.002 (25.6/25.5)	.860 (21.8)	1.131/1.126 (28.7/28.6)	1.187 (30.1)	1.077/1.067 (27.4/27.1)
20	1.495/1.455 (38.0/37.0)	1.182 (30.0)	1.132/1.127 (28.8/28.6)	.985 (25.0)	1.256/1.251 (31.9/31.8)	1.312 (33.3)	1.197/1.187 (30.4/30.1)
22	1.610/1.570 (40.9/39.9)	1.312 (33.3)	1.257/1.252 (31.9/31.8)	1.110 (28.2)	1.381/1.376 (35.1/35.0)	1.437 (36.5)	1.327/1.317 (33.7/33.5)
24	1.745/1.705 (44.3/43.3)	1.432 (36.4)	1.382/1.377 (35.1/35.0)	1.235 (31.4)	1.506/1.501 (38.3/38.1)	1.562 (39.7)	1.447/1.437 (36.8/36.5)

TABLE II: Contacts						
Con-tact Size	Contact Type	AA	ØØ BB	ØØ CC Min	DD	FF Max
12	Cup	--	.150 (3.8)	.112 (2.8)	.200 (5.1)	.400 (10.2)
12	Eyelet	.035 (0.9)	--	.112 (2.8)	--	.400 (10.2)
16	Cup	--	.103 (2.6)	.069 (1.8)	.125 (3.2)	.400 (10.2)
16	Eyelet	.025 (0.6)	--	.069 (1.8)	--	.400 (10.2)
20	Cup	--	.077 (2.0)	.042 (1.1)	.080 (2.0)	.330 (8.4)
20	Eyelet	.015 (0.4)	--	.042 (1.1)	--	.330 (8.4)

APPLICATION NOTES

1. Assembly identified with manufacturer's name and part number, space permitting.
2. Glenair 230-036 will mate with any QPL MIL-DTL-26500, MS24266 and MS27615 series bayonet coupling plug of same size, keyway and insert polarization.
3. Performance:
   Hermeticity - <x10^{-7} ccHe/sec @ 1 atmosphere differential
   Dielectric withstanding voltage - consult factory or MIL-STD-1554
   Insulation resistance - 5000 megohms min @ 500VDC
4. Material/ Finish:
   Bayonets—Cres/Passivated
   Contacts—52 Nickel alloy/Gold plated
   Insulators—Glass/NA
   Seals—fluorosilicone elastomer N.A.
5. Metric Dimensions (mm) are indicated in parentheses.

Dimensions in Inches (millimeters) are subject to change without notice.

© 2013 Glenair, Inc.

U.S. CAGE Code 06324

Printed in U.S.A.

230-038
MIL-DTL-26500 Type Hermetic Class Receptacle
MS27034H*T** Type Solder Flange Mount, Threaded Coupling

How To Order: *Commercial*

Basic Series	Shell Size (See Table I)		Contact Termination	Connector Material / Finish	Alternate Key Position
230-038	12	- 3	P	Z1	6

Connector Material / Finish
FT - Cold Rolled Steel - Fused Tin Finish
Z1 - Stainless Steel - Passivate Finish
ZL - Stainless Steel - Nickel Finish

Insert Arrangement
MIL-STD-1554
See Pages F-2 – F-3

Alternate Key Position
6, 7, 8, 9, 10
(Omit for Normal)

Basic Series

Shell Size
(See Table I)

Contact Termination
P - Pin, Solder Cup
X - Pin, Eyelet

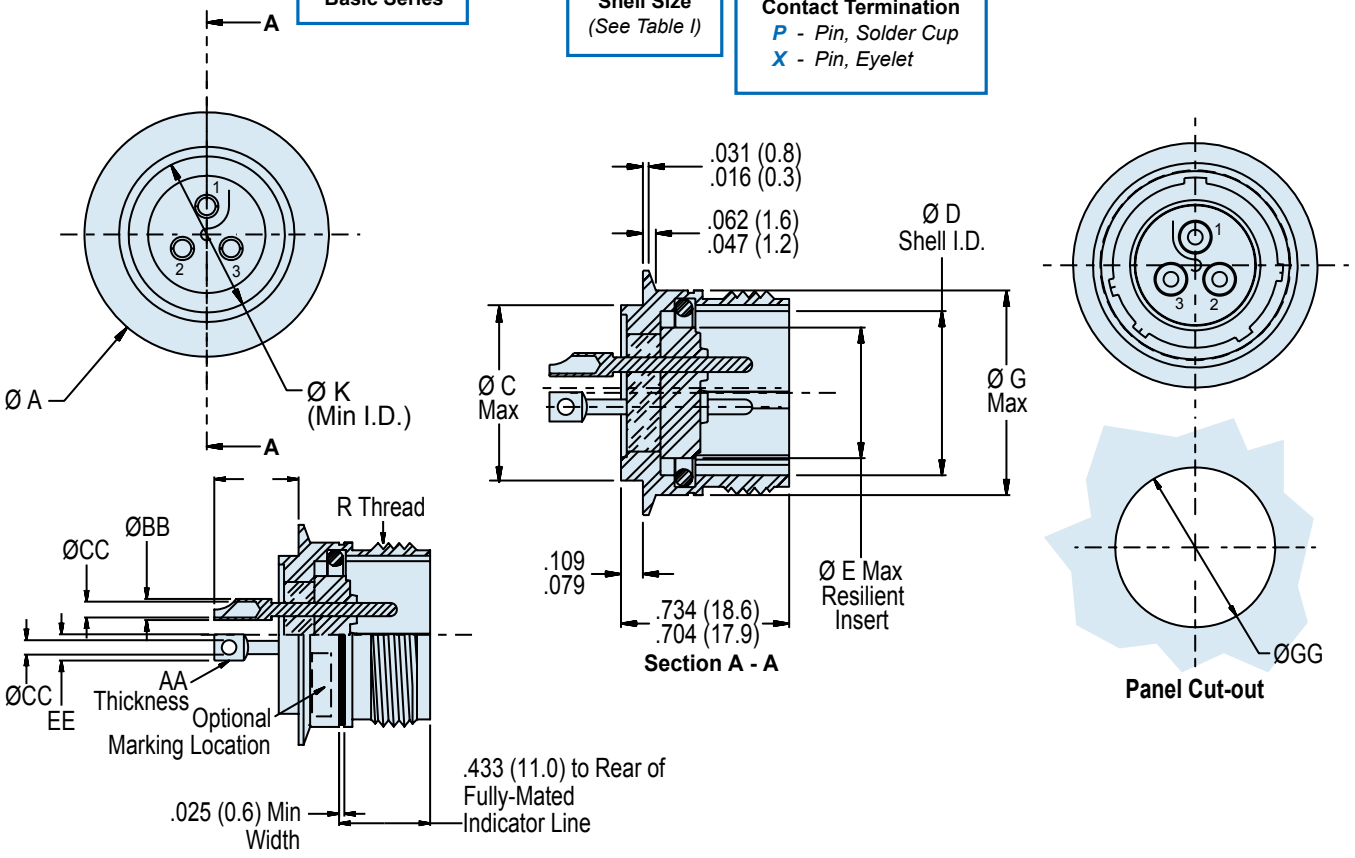

APPLICATION NOTES

1. Assembly identified with manufacturer's name and part number, space permitting.
2. Glenair 230-038 will mate with any QPL MIL-DTL-26500, MS24266 and MS27615 series bayonet coupling plug of same size, keyway and insert polarization.
3. Performance:
   Hermeticity - <x10^{-7} ccHe/sec @ 1 atmosphere differential
   Dielectric withstanding voltage - consult factory or MIL-STD-1554
   Insulation resistance - 5000 megohms min @ 500VDC
4. Material/ Finish:
   Contacts—52 Nickel alloy/Gold plated
   Insulators—Glass/NA
   Seals—fluorosilicone elastomer N.A.
5. Metric Dimensions (mm) are indicated in parentheses.

Dimensions in Inches (millimeters) are subject to change without notice.

© 2013 Glenair, Inc.
U.S. CAGE Code 06324
Printed in U.S.A.

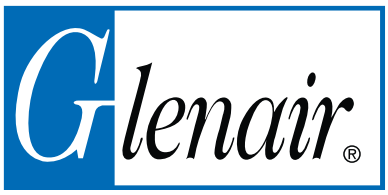

TABLE I: Shell Size, Connector Dimensions and Panel Cut-Out							
Shell Size	Ø A	Ø C Max	Ø D Shell I.D.	Ø E Resilient Insert	Ø G Max	Panel Cut-Out Ø GG	R Coupling Thread UNEF-2A
8	.725/.705 (18.4/17.9)	.437 (11.1)	.433/.428 (11.0/10.9)	.312 (7.9)	.561 (14.2)	.452/.442 (11.5/11.2)	.562-24
10	.860/.840 (21.8/21.3)	.562 (14.3)	.535/.530 (13.6/13.5)	.388 (9.9)	.696 (17.7)	.577/.567 (14.7/14.4)	.687-24
12	1.065/1.045 (27.1/26.5)	.750 (19.1)	.705/.700 (17.9/17.8)	.558 (14.2)	.875 (22.2)	.765/.755 (19.4/19.2)	.875-20
14	1.110/1.090 (28.2/27.7)	.812 (20.6)	.774/.769 (19.7/19.5)	.627 (15.9)	.935 (23.7)	.827/.817 (21.0/20.8)	.937-20
16	1.230/1.210 (31.2/30.7)	.937 (23.8)	.901/.896 (22.9/22.8)	.754 (19.2)	1.062 (27.0)	.957/.942 (24.3/23.9)	1.062-18
18	1.360/1.340 (34.5/34.0)	1.062 (27.0)	1.007/1.002 (25.6/25.5)	.860 (21.8)	1.187 (30.1)	1.077/1.067 (27.4/27.1)	1.187-18
20	1.495/1.475 (38.0/37.5)	1.182 (30.0)	1.132/1.127 (28.8/28.6)	.965 (24.5)	1.312 (33.3)	1.197/1.187 (30.4/30.1)	1.312-18
22	1.610/1.590 (40.9/40.4)	1.312 (33.3)	1.257/1.252 (31.9/31.8)	1.110 (28.2)	1.437 (36.5)	1.327/1.317 (33.7/33.5)	1.437-18
24	1.745/1.725 (44.3/43.8)	1.432 (36.4)	1.382/1.377 (35.1/35.0)	1.235 (31.4)	1.262 (32.1)	1.447/1.437 (36.8/36.5)	1.562-18

TABLE II: Contacts						
Contact Size	Contact Type	AA	ØØ BB	ØØ CC Min	DD	FF Max
12	Cup	--	.150 (3.8)	.112 (2.8)	.200 (5.1)	.400 (10.2)
12	Eyelet	.035 (0.9)	--	.112 (2.8)	--	.400 (10.2)
16	Cup	--	.103 (2.6)	.069 (1.8)	.125 (3.2)	.400 (10.2)
16	Eyelet	.025 (0.6)	--	.069 (1.8)	--	.400 (10.2)
20	Cup	--	.077 (2.0)	.042 (1.1)	.080 (2.0)	.330 (8.4)
20	Eyelet	.015 (0.4)	--	.042 (1.1)	--	.330 (8.4)

Dimensions in Inches (millimeters) are subject to change without notice.

© 2013 Glenair, Inc.
U.S. CAGE Code 06324
Printed in U.S.A.

230-039
MIL-DTL-26500 Type Hermetic Class Receptacle
Single Hole Mount, Bayonet Coupling, MS24265H*B* Type

How To Order: *Commercial*

Basic Series	Shell Size	Contact Termination	Alternate Key Position
230-039	12 - 3	P	6

Connector Material / Finish
FT - Cold Rolled Steel - Fused Tin Finish
Z1 - Stainless Steel - Passivate Finish
ZL - Stainless Steel - Nickel Plated

Insert Arrangement
Per MIL-STD-1554
See Pages F-2 – F-3

Alternate Key Position
6, 7, 8, 9, 10
(Omit for Normal)

Basic Series

Shell Size
See Table I

Contact Termination
P - Pin, Solder Cup
X - Pin, Eyelet

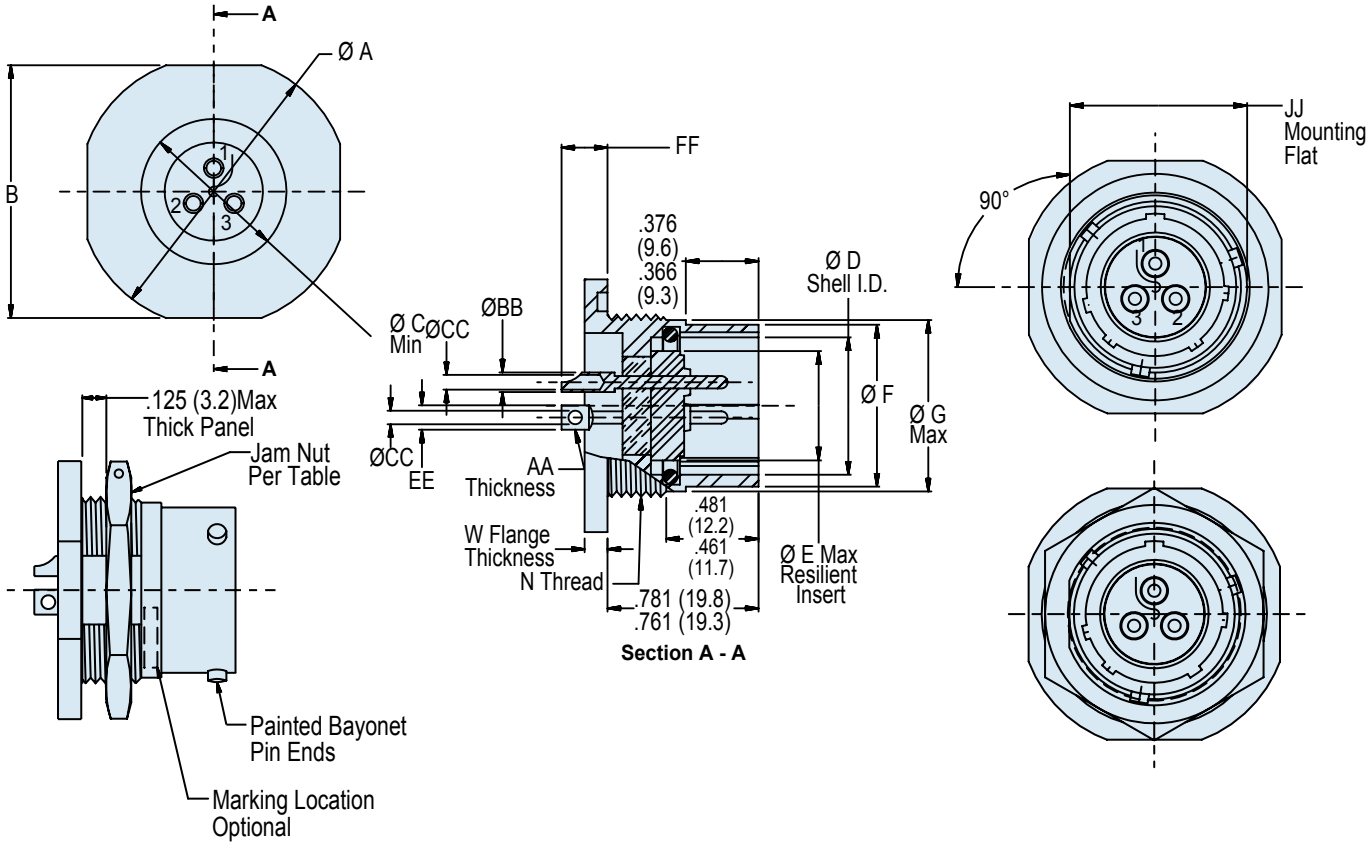

Dimensions in Inches (millimeters) are subject to change without notice.

© 2013 Glenair, Inc.

230-039
MIL-DTL-26500 Type Hermetic Class Receptacle
Single Hole Mount, Bayonet Coupling, MS24265H*B* Type

TABLE I: Shell Size, Connector Dimensions and Panel Cut-Out

Shell Size	Ø A Max	B	Ø C Min	Ø D Shell I.D.	Ø E Resilient Insert	Ø F	Ø G Max	N Thread	JJ Mounting Flat	Flange Thickness W ± .020 (0.5)	Panel Cut-Out EE	Panel Cut-Out FF	Jam Nut MS3186
8	1.068 (27.1)	.979 (24.9)	.493 (12.5)	.433/.428 (11.0/10.9)	.312 (7.9)	.536/.531 (13.6/13.5)	.561 (14.2)	.625-20 UN-2A	.596/.590 (15.1/15.0)	.117 (3.0)	.605 (15.4)	.635 (16.1)	-105
10	1.192 (30.3)	1.104 (28.0)	.555 (14.1)	.535/.530 (13.6/13.5)	.388 (9.9)	.659/.654 (16.7/16.6)	.696 (17.7)	.750-20 UNEF 2A	.721/.715 (18.3/18.2)	.117 (3.0)	.730 (18.5)	.760 (19.3)	-107
12	1.380 (35.1)	1.291 (32.8)	.743 (18.9)	.705/.700 (17.9/17.8)	.558 (14.2)	.829/.824 (21.1/20.9)	.875 (22.2)	.937-20 UNEF-2A	.908/.902 (23.1/22.9)	.117 (3.0)	.917 (23.3)	.947 (24.1)	-110
14	1.505 (28.2)	1.391 (35.3)	.805 (20.4)	.774/.769 (19.7/19.5)	.627 (15.9)	.898/.893 (22.8/22.7)	.935 (23.7)	1.000-20 UNEF-2A	.971/.965 (24.7/24.5)	.117 (3.0)	.980 (24.9)	1.010 (25.7)	-111
16	1.630 (41.4)	1.516 (38.5)	.931 (23.6)	.901/.896 (22.9/22.8)	.772 (19.6)	1.025/1.020 (26.0/25.9)	1.062 (27.0)	1.125-20 UNEF-2A	1.096/1.090 (27.8/27.7)	.117 (3.0)	1.105 (28.1)	1.135 (28.8)	-112
18	1.765 (44.8)	1.641 (41.7)	1.055 (26.8)	1.007/1.002 (25.6/25.5)	.860 (21.8)	1.131/1.126 (28.7/28.6)	1.187 (30.1)	1.250-18 UNEF-2A	1.220/1.214 (31.0/30.8)	.117 (3.0)	1.229 (31.2)	1.260 (32.0)	-116
20	1.860 (47.2)	1.766 (44.9)	1.243 (31.6)	1.132/1.125 (28.8/28.6)	.985 (25.0)	1.256/1.251 (31.9/31.8)	1.312 (33.3)	1.375-18 UNEF-2A	1.345/1.339 (34.2/34.0)	.117 (3.0)	1.354 (34.4)	1.385 (35.2)	-117
22	2.068 (52.5)	1.954 (49.6)	1.305 (33.1)	1.257/1.252 (31.9/31.8)	1.110 (28.2)	1.381/1.376 (35.1/35.0)	1.437 (36.5)	1.500-18 UNEF-2A	1.470/1.464 (37.3/37.2)	.148 (3.8)	1.497 (38.0)	1.510 (38.4)	-120
24	2.160 (54.9)	2.079 (52.8)	1.493 (37.9)	1.382/1.377 (35.1/35.0)	1.235 (31.4)	1.506/1.501 (38.3/38.1)	1.562 (39.7)	1.625-18 UNEF-2A	1.595/1.589 (40.5/40.4)	.148 (3.8)	1.604 (40.7)	1.635 (41.5)	-121

TABLE II: Contacts

Con-tact Size	Contact Type	AA	ØØ BB	ØØ CC Min	DD	FF Max
12	Cup	--	.150 (3.8)	.112 (2.8)	--	.235 (6.0)
12	Eyelet	.035 (0.9)	--	--	.200 (5.1)	.235 (6.0)
16	Cup	--	.103 (2.6)	.069 (1.8)	--	.235 (6.0)
16	Eyelet	.025 (0.6)	--	--	.125 (3.2)	.235 (6.0)
20	Cup	--	.077 (2.0)	.042 (1.1)	--	.165 (4.2)
20	Eyelet	.015 (0.4)	--	--	.080 (2.0)	.165 (4.2)

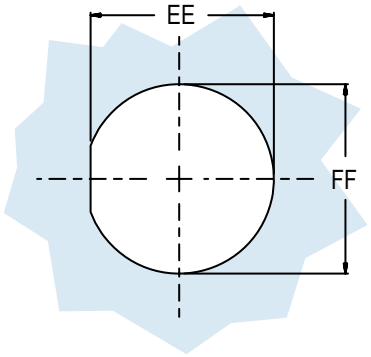

APPLICATION NOTES

1. Assembly identified with manufacturer's name and part number, space permitting.
2. Glenair 230-039 will mate with any QPL MIL-DTL-MS24266 type bayonet coupling plug of same size, keyway and insert polarization.
3. Performance:
   Hermeticity - <x10^{-7} ccHe/sec @ 1 atmosphere differential
   Dielectric withstanding voltage - consult factory or MIL-STD-1554
   Insulation resistance - 5000 megohms min @ 500VDC
4. Material/ Finish:
   Shell and Jam Nut—specified by class
   Pin contacts—nickel-iron alloy 52/gold
   Bayonets—Cres/Passivated
   Contacts—52 Nickel alloy/Gold plated
   Insulators—Glass/NA
   Seals—fluorosilicone elastomer N.A.
5. Metric Dimensions (mm) are indicated in parentheses.

Dimensions in Inches (millimeters) are subject to change without notice.

© 2013 Glenair, Inc.
U.S. CAGE Code 06324
Printed in U.S.A.

230-040
MIL-DTL-26500 Type Hermetic Class Receptacle
Single Hole Mount, Threaded Coupling, MS24265 Type

How To Order: *Commercial*

Connector Material / Finish		Insert Arrangement		Alternate Key Position
FT - Carbon Steel - Fused Tin Finish *Z1 - Stainless Steel - Passivate Finish* *ZL - Stainless Steel - Nickel Plated*		Per MIL-STD-1554 *See Pages F-2 – F-3*		*6, 7, 8, 9, 10* *(Omit for Normal)*
230-040	**Z1**	**12** -	**3**	**P**	**6**
Basic Series		**Shell Size** *See Table I*		**Contact Termination** *P - Pin, Solder Cup* *X - Pin, Eyelet*	

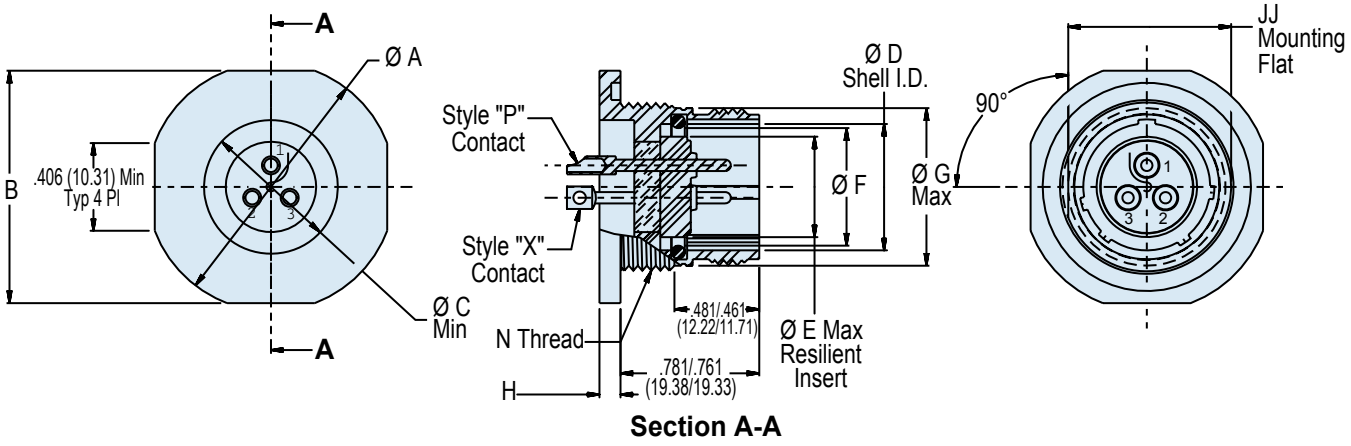

Section A-A

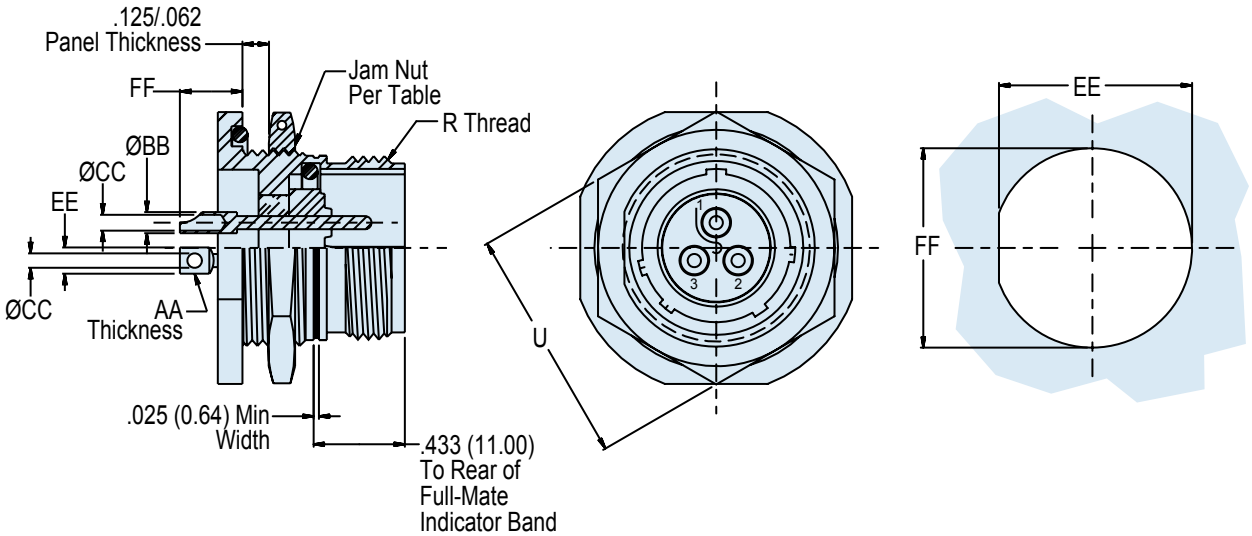

Dimensions in Inches (millimeters) are subject to change without notice.

© 2013 Glenair, Inc.
U.S. CAGE Code 06324
Printed in U.S.A.

230-040
MIL-DTL-26500 Type Hermetic Class Receptacle
Single Hole Mount, Threaded Coupling, MS24265 Type

TABLE I: Shell Size, Connector Dimensions and Panel Cut-Out

Shell Size	Ø A Max	B	Ø D Shell I.D.	Ø E Resilient Insert	Ø G Max	H Flange Thickness	N Thread	R Thread	JJ Mounting Flat	Panel Cut-Out EE	Panel Cut-Out FF	U Hex Max
8	1.068 (27.1)	.984/.974 (24.99/24.74)	.433/.428 (11.0/10.9)	.318 (8.08)	.561 (14.2)	.137/.097 (3.48/2.46)	.625-20 UN-2A	.562-24 UNEF-2A	.596/.590 (15.1/15.0)	.605 (15.37)	.635 (16.1)	.828 (21.03)
10	1.192 (30.3)	1.109/1.099 (28.17/27.91)	.535/.530 (13.6/13.5)	.394 (10.01)	.696 (17.7)	.137/.097 (3.48/2.46)	.750-20 UNEF 2A	.687-24 UNEF 2A	.721/.715 (18.3/18.2)	.730 (18.54)	.760 (19.3)	.953 (24.21)
12	1.380 (35.1)	1.296/1.286 (32.92/32.66)	.705/.700 (17.9/17.8)	.564 (14.33)	.875 (22.2)	.137/.097 (3.48/2.46)	.937-20 UNEF-2A	.875-20 UNEF-2A	.908/.902 (23.1/22.9)	.917 (23.29)	.947 (24.1)	1.140 (28.96)
14	1.505 (38.2)	1.399/1.386 (35.53/35.20)	.774/.769 (19.7/19.5)	.633 (16.08)	.935 (23.7)	.137/.097 (3.48/2.46)	1.000-20 UNEF-2A	.937-20 UNEF-2A	.971/.965 (24.7/24.5)	.980 (24.89)	1.010 (25.7)	1.250 (31.75)
16	1.630 (41.4)	1.521/1.511 (38.63/38.38)	.901/.896 (22.9/22.8)	.780 (19.81)	1.062 (27.0)	.137/.097 (3.48/2.46)	1.125-20 UNEF-2A	1.062-18 UNEF-2A	1.096/1.090 (27.8/27.7)	1.105 (28.07)	1.135 (28.8)	1.329 (33.76)
18	1.740 (44.2)	1.646/1.636 (41.81/41.55)	1.007/1.002 (25.6/25.5)	.866 (22.00)	1.187 (30.1)	.137/.097 (3.48/2.46)	1.250-20 UNEF-2A	1.187-18 UNEF-2A	1.220/1.214 (31.0/30.8)	1.225 (31.12)	1.260 (32.0)	1.455 (36.96)
20	1.860 (47.2)	1.771/1.761 (44.98/44.73)	1.132/1.127 (28.8/28.6)	.991 (25.17)	1.312 (33.3)	.137/.097 (3.48/2.46)	1.375-18 UNEF-2A	1.312-18 UNEF-2A	1.345/1.339 (34.2/34.0)	1.350 (34.29)	1.385 (35.2)	1.642 (41.71)
22	2.040 (51.8)	1.959/1.949 (49.76/49.50)	1.257/1.252 (31.9/31.8)	1.116 (28.35)	1.437 (36.5)	.168/.128 (4.27/3.25)	1.500-18 UNEF-2A	1.437-18 UNEF-2A	1.470/1.464 (37.3/37.2)	1.475 (37.47)	1.510 (38.4)	1.705 (43.31)
24	2.160 (54.9)	2.084/2.074 (52.93/52.68)	1.382/1.377 (35.1/35.0)	1.241 (31.52)	1.562 (39.7)	.168/.128 (4.27/3.25)	1.625-18 UNEF-2A	1.562-18 UNEF-2A	1.595/1.589 (40.5/40.4)	1.600 (40.64)	1.635 (41.5)	1.892 (48.06)

TABLE II: Contacts

Con-tact Size	Contact Type	AA	ØØ BB	ØØ CC Min	DD	FF Max
12	Cup	--	.150 (3.8)	.112 (2.8)	--	.235 (6.0)
12	Eyelet	.035 (0.9)	--	--	.200 (5.1)	.235 (6.0)
16	Cup	--	.103 (2.6)	.069 (1.8)	--	.235 (6.0)
16	Eyelet	.025 (0.6)	--	--	.125 (3.2)	.235 (6.0)
20	Cup	--	.077 (2.0)	.042 (1.1)	--	.165 (4.2)
20	Eyelet	.015 (0.4)	--	--	.080 (2.0)	.165 (4.2)

APPLICATION NOTES

1. Assembly identified with manufacturer's name and part number, space permitting.
2. Glenair 230-040 will mate with any QPL MIL-DTL-MS26500/MS24266 type threaded coupling plug of same size, keyway and insert polarization.
3. Performance:
   Hermeticity - <x10^{-7} ccHe/sec @ 1 atmosphere differential
   Dielectric withstanding voltage - consult factory or MIL-STD-1554
   Insulation resistance - 5000 megohms min @ 500VDC
4. Material/ Finish:
   Shell and Jam Nut—specified by class
   Contacts—52 Nickel alloy/Gold plated
   Insulators—Glass/N.A.
   Seals—fluorosilicone elastomer/N.A.
5. Metric Dimensions (mm) are indicated in parentheses.

Dimensions in Inches (millimeters) are subject to change without notice.

© 2013 Glenair, Inc.
U.S. CAGE Code 06324
Printed in U.S.A.

230-041
MIL-DTL-26500 Type Hermetic Class Receptacle
Square Flange Mount, Bayonet Coupling

How To Order: *Commercial*

Basic Series	Shell Size	Contact Termination	Alternate Key Position
230-041	12 - 3	P	6

Connector Material / Finish
FT - Carbon Steel, Tin Plate
Z1 - Stainless Steel - Passivate Finish
ZL - Stainless Steel - Nickel Plated

Insert Arrangement
Per MIL-STD-1554
See Pages F-2 – F-3

Alternate Key Position
6, 7, 8, 9, 10
(Omit for Normal)

Basic Series

Shell Size
See Table I

Contact Termination
P - Pin, Solder Cup
X - Pin, Eyelet

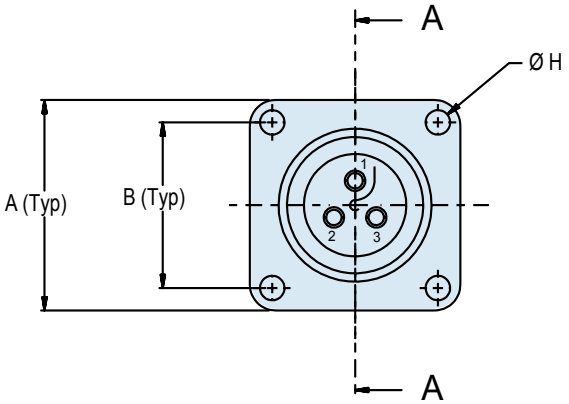

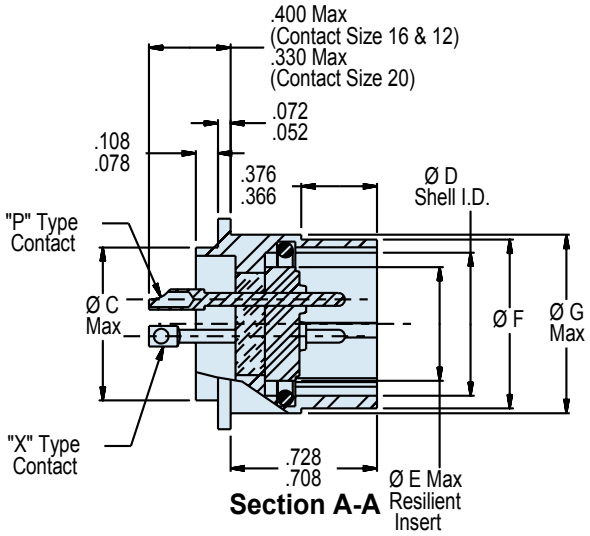

Section A-A

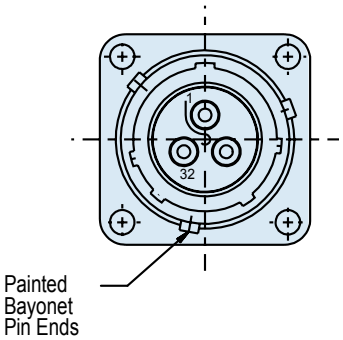

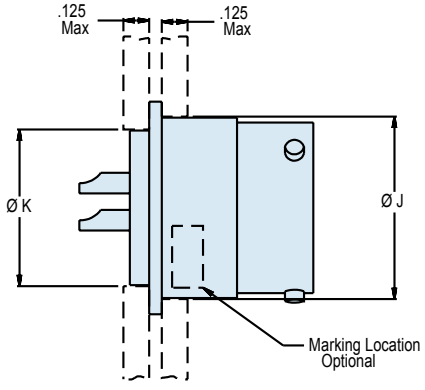

Panel Cutout

Dimensions in Inches (millimeters) are subject to change without notice.

© 2013 Glenair, Inc.

TABLE I: Shell Size, Connector Dimensions and Panel Cut-Out										
Shell Size	A	B	CØ Max	DØ Shell I.D.	EØ Resilient Insert	FØ	GØ Max	HØ Thru 4 Pl.	Panel Cutout Rear Mount JØ	Panel Cutout Front Mount K Ø
8	0.812 (20.6)	0.594 (15.1)	0.437 (11.1)	.433/.428 (11.0/10.9)	0.312 (7.9)	.536/.531 (13.6/13.5)	0.561 (14.2)	0.120 (3.0)	.630/.620 (16.0/15.7)	.457/.447 (11.6/11.4)
10	0.937 (23.8)	0.719 (18.3)	0.562 (14.3)	.535/.530 (13.6/13.5)	0.388 (9.9)	.659/.654 (16.7/16.6)	0.696 (17.7)	0.120 (3.0)	.758/.748 (19.3/19.0)	.582/.572 (14.8/14.5)
12	1.031 (26.2)	0.812 (20.6)	0.750 (19.1)	.705/.700 (17.9/17.8)	0.558 (14.2)	.829/.824 (21.1/20.9)	0.875 (22.2)	0.120 (3.0)	.923/.913 (23.4/23.2)	.770/.760 (19.6/19.3)
14	1.125 (28.6)	0.906 (23.0)	0.812 (20.6)	.774/.769 (19.7/19.5)	0.627 (15.9)	.898/.893 (22.8/22.7)	0.935 (23.7)	0.120 (3.0)	.990/.980 (25.1/24.9)	.832/.822 (21.1/20.9)
16	1.250 (31.8)	0.969 (24.6)	0.937 (23.8)	.901/.896 (22.9/22.8)	0.772 (19.6)	1.025/1.020 (26.0/25.9)	1.062 (27.0)	0.120 (3.0)	1.117/1.107 (28.4/28.1)	.958/.948 (24.3/24.1)
18	1.343 (34.1)	1.062 (27.0)	1.062 (27.0)	1.007/1.002 (25.6/25.5)	0.860 (21.8)	1.131/1.126 (28.7/28.6)	1.187 (30.1)	0.120 (3.0)	1.219/1.209 (31.0/30.7)	1.082/1.072 (27.5/27.2)
20	1.437 (36.5)	1.156 (29.4)	1.187 (30.1)	1.132/1.125 (28.8/28.6)	0.985 (25.0)	1.256/1.251 (31.9/31.8)	1.312 (33.3)	0.120 (3.0)	1.347/1.337 (34.2/34.0)	1.202/1.192 (30.5/30.3)
22	1.562 (39.7)	1.250 (31.8)	1.312 (33.3)	1.257/1.252 (31.9/31.8)	1.110 (28.2)	1.381/1.376 (35.1/35.0)	1.437 (36.5)	0.120 (3.0)	1.462/1.452 (37.1/36.9)	1.332/1.322 (33.8/33.6)
24	1.703 (43.3)	1.375 (34.9)	1.437 (36.5)	1.382/1.377 (35.1/35.0)	1.235 (31.4)	1.506/1.501 (38.3/38.1)	1.562 (39.7)	0.149 (3.8)	1.587/1.577 (40.3/40.1)	1.452/1.442 (36.9/36.6)

APPLICATION NOTES

1. Assembly identified with manufacturer's name and part number, space permitting.
2. Glenair 230-041 will mate with any QPL MIL-DTL-MS24266 type bayonet coupling plug of same size, keyway and insert polarization.
3. Performance:
   Hermeticity - $<x10^{-7}$ ccHe/sec @ 1 atmosphere differential
   Dielectric withstanding voltage - consult factory or MIL-STD-1554
   Insulation resistance - 5000 megohms min @ 500VDC
4. Material/ Finish:
   Shell—specified by class
   Bayonets—Stainless Steel/Passivated
   Contacts—52 Nickel alloy/Gold plated
   Insulators—Glass/NA
   Seals—fluorosilicone elastomer N.A.
5. Metric Dimensions (mm) are indicated in parentheses.

Dimensions in Inches (millimeters) are subject to change without notice.

© 2013 Glenair, Inc.

237-165
MIL-DTL-26500 Type Hermetic Class Receptacle
MS26424H*T** Type Square Flange Mount, Threaded Coupling

How To Order: *Commercial*

Connector Material / Finish	Insert Arrangement		Alternate Key Position	
SM - Carbon Steel/Electroless Nickel	MIL-STD-1554 *See Pages F-2 – F-3*		*6, 7, 8, 9, 10* *(Omit for Normal)*	
237-165	**SM**	**12** - **3**	**P**	**6**
Basic Series	**Shell Size** *(See Table I)*		**Contact Termination** *P - Pin, Solder Cup* *X - Pin, Eyelet*	

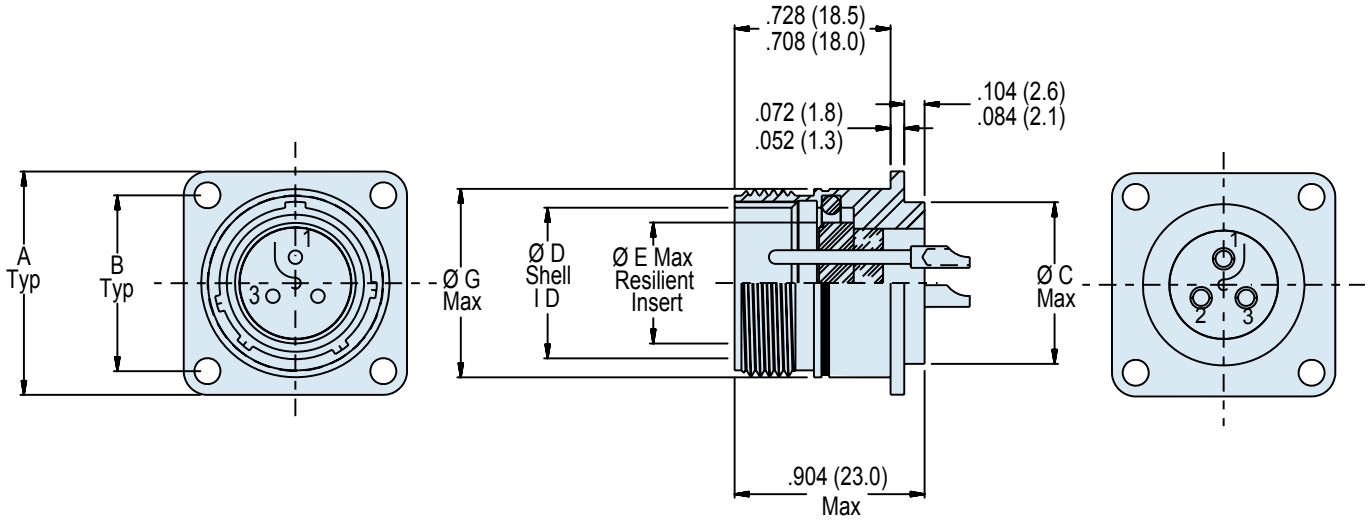

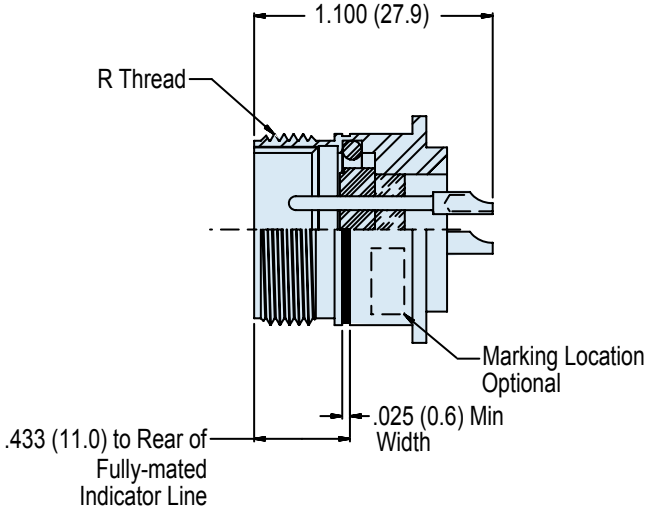

Dimensions in Inches (millimeters) are subject to change without notice.

© 2013 Glenair, Inc.
U.S. CAGE Code 06324
Printed in U.S.A.

TABLE I: Shell Size, Connector Dimensions and Panel Cut-Out									
Shell Size	A	B	Ø C	Ø D Shell I.D.	Ø E Max Resilient Insert	Ø G Max	Ø H Through 4 Places	R Coupling Thread UNEF-2A	Panel Cut-Out Min Ø
8	.812 (20.6)	.594 (15.1)	.500/.494 (12.7/12.5)	.433/.428 (11.0/10.9)	.318 (8.1)	.561 (14.2)	.125/.116 (3.2/2.9)	.562-24	.572 (14.5)
10	.937 (23.8)	.719 (18.3)	.562/.556 (14.3/14.1)	.535/.530 (13.6/13.5)	.394 (10.0)	.696 (17.7)	.125/.116 (3.2/2.9)	.688-24	.706 (17.9)
12	1.031 (26.2)	.812 (20.6)	.750/.744 (19.1/18.9)	.705/.700 (17.9/17.8)	.564 (14.3)	.875 (22.2)	.125/.116 (3.2/2.9)	.875-20	.885 (22.5)
14	1.125 (28.6)	.906 (23.0)	.812/.806 (20.6/20.5)	.774/.769 (19.7/19.5)	.633 (16.1)	.935 (23.7)	.125/.116 (3.2/2.9)	.938-20	.946 (24.0)
16	1.250 (31.8)	.969 (24.6)	.937/.931 (23.8/23.6)	.901/.896 (22.9/22.8)	.760 (19.3)	1.062 (27.0)	.125/.116 (3.2/2.9)	1.062-18	1.072 (27.2)
18	1.343 (34.1)	1.062 (27.0)	1.062/1.056 (27.0/26.8)	1.007/1.002 (25.6/25.5)	.866 (22.0)	1.187 (30.1)	.125/.116 (3.2/2.9)	1.188-18	1.197 (30.4)
20	1.437 (36.5)	1.156 (29.4)	1.187/1.181 (30.1/30.0)	1.132/1.125 (28.8/28.6)	.991 (25.2)	1.312 (33.3)	.125/.116 (3.2/2.9)	1.312-18	1.322 (33.6)
22	1.562 (39.7)	1.250 (31.8)	1.312/1.306 (33.3/33.2)	1.257/1.252 (31.9/31.8)	1.116 (28.3)	1.437 (36.5)	.125/.116 (3.2/2.9)	1.438-18	1.447 (36.8)
24	1.703 (43.3)	1.375 (34.9)	1.437/1.431 (36.5/36.3)	1.382/1.377 (35.1/35.0)	1.241 (31.5)	1.562 (39.7)	.154/.145 (3.9/3.7)	1.562-18	1.572 (39.9)

APPLICATION NOTES

1. Assembly identified with manufacturer's name and part number, space permitting.
2. Glenair 237-165 will mate with any QPL MIL-DTL-26500 type threaded coupling plug of same size, keyway and insert polarization.
3. Performance:
   Hermeticity - $<x10^{-7}$ ccHe/sec @ 1 atmosphere differential
   Dielectric withstanding voltage - consult factory or MIL-STD-1554
   Insulation resistance - 5000 megohms min @ 500VDC
4. Material/ Finish:
   Shell—C1215 Steel/Electroless nickel
   Contacts—52 Nickel alloy/Gold plated
   Insulators—Glass/NA
   Seals—fluorosilicone elastomer N.A.
5. Metric Dimensions (mm) are indicated in parentheses.

Dimensions in Inches (millimeters) are subject to change without notice.

© 2013 Glenair, Inc.

U.S. CAGE Code 06324

Printed in U.S.A.

POWER AND SIGNAL

MIL-DTL-5015

Type Glass Seal Hermetic Connectors

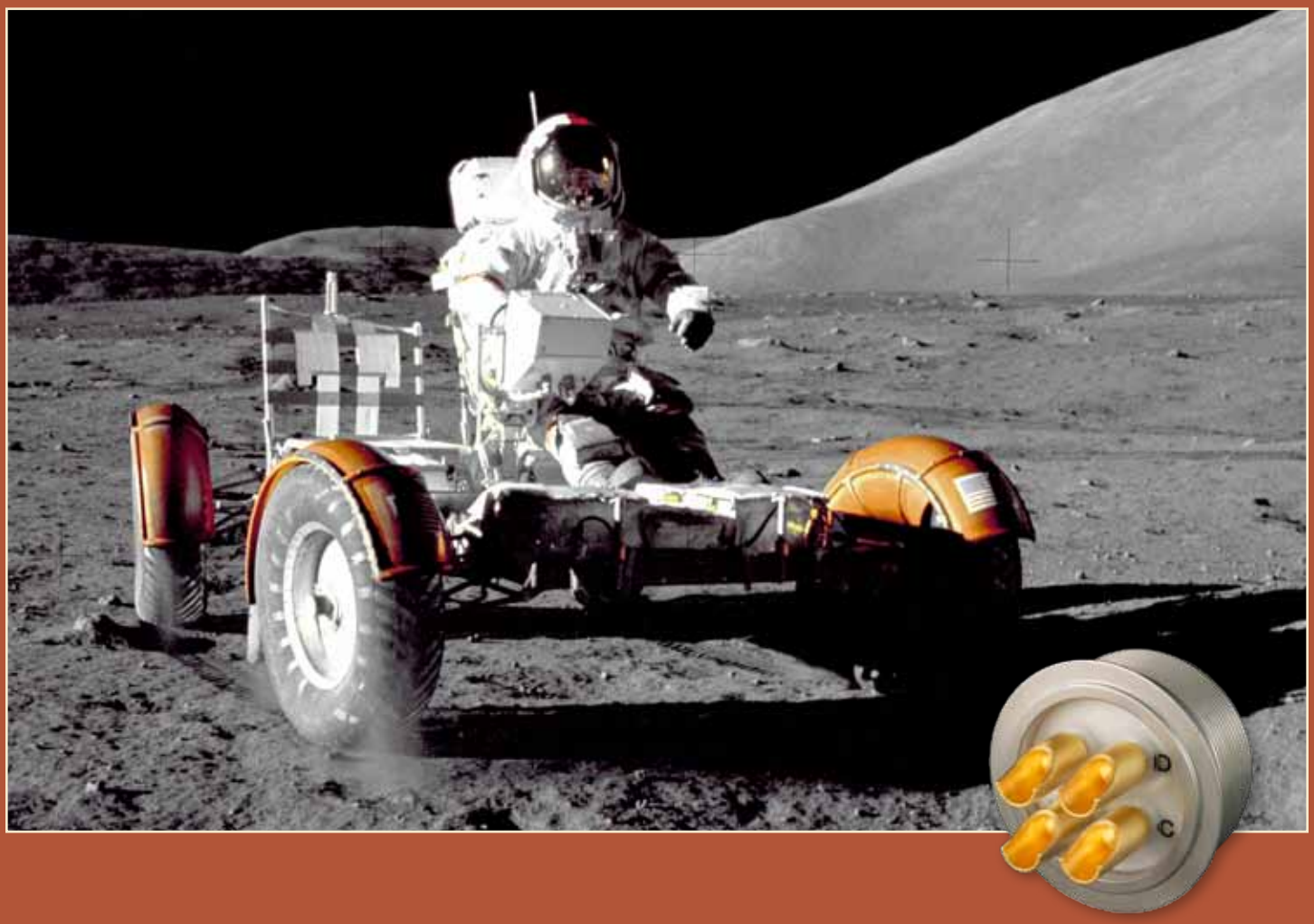

Glenair MIL-DTL-5015 type commercial hermetic connectors are general purpose, low-density circular connectors ideally suited for applications that require power and signal contacts in a glass sealed hermetic package. This series is available in a wide range of shell sizes and contact layouts that are compatible with all standard environmental MIL-DTL-5015 plug connectors. Because Glenair makes all its hermetic connectors in-house, including the machining of shells, molding of interfacial seals and firing of hermetic components, we can offer you outstanding availability on stock products and fast turnaround on special orders. Glenair also makes and stocks all the standard connector accessory backshells typically specified with 5015 type connectors.

GLASS-SEALED
Hermetic
CONNECTORS

Glenair®

Glenair, Inc.
1211 Air Way
Glendale, CA
91201-2497
818-247-6000
sales@glenair.com
www.glenair.com

Corrosion Resistant Stainless Steel Harsh Environment Glass Seal Hermetic Connectors for Power and Signal Applications

Glenair MIL-DTL-5015 type hermetic connectors are made from passivated stainless steel or ferrous steel shells, with glass insulators fused to the connector shell, and contacts meeting a leak rate of 1 X 10-7 cc/helium per second. The Glenair MIL-DTL-5015 type hermetic connector is equipped with fluorosilicone elastomer interfacial and peripheral seals which provide positive sealing with plug connectors. Gold plated nickel-iron alloy 52 contacts are available in sizes 0, 4, 8, 10, 12 and 16, depending on the layout chosen. Solder cup and eyelet contact styles are standard.

Quick Selection Guide

Part Number	Description	Page
	MIL-DTL-5015 Type Insert Arrangements	G-2
	MIL-DTL-5015 Type Alternate Key Positions	G-5
250-013	Threaded Coupling Square Flange Receptacle MS3142 Type	G-6
250-014	Threaded Coupling Solder Mount Receptacle MS3143 Type	G-8
250-015	Threaded Coupling Box Mount Receptacle Connector MS3142 Type	G-10
250-016	Threaded Coupling Solder Mount Receptacle Connector MS3143 Type Sockets	G-12
250-025	Threaded Coupling Flangeless Mount Receptacle Connector MS3143 Type	G-14
257-384	Jam Nut Mount Receptacle Connector MS3404 Type	G-16
947-042	Jam Nut Mount Bulkhead Feed-Thru Connector with Pin/Socket Contacts	G-18
947-056	Jam Nut Mount Bulkhead Feed-Thru Connector with Pin/Pin Contacts	G-20
947-259	Panel Mount Bulkhead Feed-Thru Receptacle	G-22
947-371	Jam Nut Mount Bulkhead Feed-Thru Receptacle	G-24

© 2013 Glenair, Inc.

MIL-DTL-5015 Type Hermetic Power and Signal Connectors

Insert Arrangements per MIL-STD-1651

Insert Arrangements						
Pattern Number	Contact Size and Quantity					Service Rating
	16	12	8	4	0	
8S-1	1					A
10S-2	1					A
10SL-3	3					INST
10SL-4	2					A
12S-3	2					A
12S-4	1					D
12-5		1				D
14S-1	3					A
14S-2	4					INST
14-3			1			A
14S-4	1					O
14S-5	5					INST
14S-6	6					INST
14S-7	3					A
14S-9	2					A
16S-1	7					A
16-2		1				E
16S-3	1					B
16S-4	2					D
16S-5	3					A
16S-6	3					A
16-7	2		1			A
16S-8	5					A
16-9	2	2				A
16-10		3				A
16-11		2				A
16-12				1		A
16-13		2				A
18-1	10					A/INST
18-3		2				D
18-4	4					D
18-5	1	2				D
18-6				1		D
18-7			1			B
18-8	7	1				A
18-9	5	2				INST
18-10		4				A
18-11		5				A
18-12	6					A
18-13		3	1			A
18-14	1			1		A
18-15		4				A

Insert Arrangements						
Pattern Number	Contact Size and Quantity					Service Rating
	16	12	8	4	0	
18-16		1				C
18-20	5					A
18-22	3					D
18-29	5					A
20-2					1	D
20-3		3				D
20-4		4				D
20-5	2					E
20-6	3					D
20-7	8					D/A
20-8	4		2			INST
20-9	7	1				D/A
20-11	13					INST
20-12	1			1		A
20-13	4					A
20-14		3	2			A
20-15		7				A
20-16	7	2				A
20-17	1	5				A
20-18	6	3				A
20-19			3			A
20-22	3		3			A
20-23			2			A
20-24	2		2			A
20-27	14					A
20-29	17					A
20-31	11					A
20-33	11					A
22-1			2			D
22-2			3			D
22-3	1			1		D
22-4		2	2			A
22-5	4	2				D
22-6	1		2			D
22-7					1	E
22-8		2				E
22-9		3				E
22-10	4					E
22-11	2					B
22-12	3		2			D
22-13	1	4				D
22-14	19					A

Dimensions in Inches (millimeters) are subject to change without notice.

© 2013 Glenair, Inc.

U.S. CAGE Code 06324

Printed in U.S.A.

Insert Arrangements						
Pattern Number	Contact Size and Quantity					Service Rating
	16	12	8	4	0	
22-15	1	5				E/A
22-17	8	1				D/A
22-18	8					A/D
22-19	14					A
22-20	9					A
22-21	2				1	A
22-22			4			A
22-23		8				D/A
22-24	4	2				D/A
22-25	2				1	A
24-1		1			1	D
24-2		7				D
24-3	5	2				D
24-4	3				1	D
24-5	16					A
24-6		8				D/A
24-7	14	2				A
24-9				2		A
24-10			7			A
24-11		6	3			A
24-12		3		2		A
24-14		2			1	A
24-16	3	3	1			D/A
24-17	3	2				D
24-19	12					A
24-20	9	2				D
24-21	9		1			D
24-22			4			D
24-23	2		3			D
24-27	7					E
24-28	24					INST
24-80	23					INST
28-1		6	3			D/A
28-2	12	2				D
28-3			3			E
28-4	7	2				E/D
28-5	2	1		2		D
28-6				3		D
28-8	10	2				E/D/A
28-9	6	6				D
28-10		3	2	2		D/A
28-11	18	4				A

Insert Arrangements						
Pattern Number	Contact Size and Quantity					Service Rating
	16	12	8	4	0	
28-12	26					A
28-14	11					D
28-15	35					A
28-16	20					A
28-17	15					B/D/A
28-18	12					D/C/A/N
28-19	6	4				D/B/A
28-20	4	10				A
28-21	37					A
28-22	3			3		D
32-1		3			2	E/D
32-2	2			3		E
32-3	4	2		2	1	D
32-4	12	2				D/A
32-5					2	D
32-6	16	2	3	2		A
32-7	28	7				INST/A
32-8	24	6				A
32-9	12			2		
32-10	3		2	2		E/D/B/A
32-12	10	5				D/A
32-13	18	5				D
32-14		5		2		D
32-15		6			2	D
32-17				4		D
32-22	54					A
32-63				5		D
32-73	46					A
36-1	18	4				D
36-3		3			3	D
36-4					3	D/A
36-5					4	A
36-6				4	2	A
36-7	40	7				A
36-8	46	1				A
36-9	14	14	2	1		A
36-10	48					A
36-13	15	2				E/A
36-14	6	5	5			D
36-15	35					D/A
36-19	10	5		1	1	D
36-52	52					A

Dimensions in Inches (millimeters) are subject to change without notice.

© 2013 Glenair, Inc.

MIL-DTL-5015 Type Hermetic Power and Signal Connectors

Insert Arrangements per MIL-STD-1651

Insert Arrangements						
Pattern Number	Contact Size and Quantity					Service Rating
	16	12	8	4	0	
36-66	52	4				A
40-1	24	6				D
40-2	23					D/B
40-3	18	4		1		D
40-4	16	2	3	2		D
40-5		6	4	2	3	A
40-6	24	1			1	D
40-7	18	2			2	D/A
40-9	24	22	1			A
40-10	16		9	4		A
40-11	18	4	1	1	1	D
40-56	85					A
40-62	60					A
44-1	36	6				D
44-2	14	14	2	1		D
44-3	24	3	2	2		D
44-4	31	8			2	D
44-52	104					A
48-1		6	4	2	3	E/D
48-2	46	1				E/D
48-3	18	1	3		3	D
48-4	47	16	3		2	D/A
48-62	85					D

Dimensions in Inches (millimeters) are subject to change without notice.

© 2013 Glenair, Inc.

Alternate Key Positions				
Dash Number	W°	X°	Y°	Z°
8S-1	–	–	–	–
10S-2	–	–	–	–
10SL-3	–	–	–	–
10SL-4	–	–	–	–
12S-3	70	145	215	290
12S-4	–	–	–	–
14S-1	–	–	–	–
14S-2	–	120	240	–
14S-4	–	–	–	–
14S-5	–	110	–	–
14S-6	–	–	–	–
14S-7	90	180	270	–
14S-9	70	145	215	290
16S-1	80	–	–	280
16S-3	–	–	–	–
16S-4	35	110	250	325
16S-5	70	145	215	290
16S-6	90	180	270	–
16S-8	–	170	265	–
16-9	35	110	250	325
16-10	90	180	270	–
16-11	35	110	250	325
18-1	70	145	215	290
18-4	35	110	250	325
18-8	70	–	–	290
18-9	80	110	250	280
18-10	–	120	240	–
18-11	–	170	265	–
18-12	80	–	–	280
20-4	45	110	250	–
20-7	80	110	250	280
20-8	80	110	250	280
20-14	80	110	250	280
20-15	80	–	–	280
20-16	80	110	250	280
20-17	90	180	270	–
20-18	35	110	250	325
20-19	90	180	270	–

Alternate Key Positions				
Dash Number	W°	X°	Y°	Z°
20-22	80	110	250	280
20-24	35	110	250	325
20-27	35	110	250	325
20-29	80	–	–	280
20-33	–	–	–	–
22-2	70	145	215	290
22-5	35	110	250	325
22-9	70	145	215	290
22-14	80	–	–	280
22-18	80	110	250	280
22-19	80	110	250	280
22-20	35	110	250	325
22-22	–	110	250	–
22-23	35	–	250	–
24-2	80	–	–	280
24-4	80	110	250	280
24-7	80	110	250	280
24-10	80	–	–	280
24-11	35	110	250	325
24-19	–	–	–	–
24-20	80	110	250	280
24-27	80	–	–	280
24-28	80	110	250	280
28-9	80	110	250	280
28-11	80	110	250	280
28-12	90	180	280	–
28-15	80	110	250	280
28-17	80	110	250	280
28-20	80	110	250	280
28-21	80	110	250	280
32-6	80	110	250	280
32-7	80	125	235	280
32-8	80	125	235	280
32-15	35	110	250	280
32-17	45	110	250	–
36-5	–	120	240	–
36-7	80	110	250	280
36-9	80	125	235	280
36-10	80	125	235	280

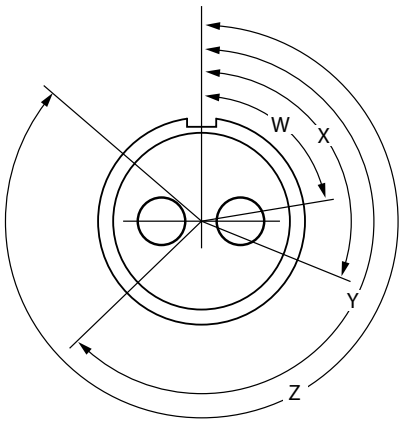

Pin Insert Face View
Normal Insert
Keying Shown

Dimensions in Inches (millimeters) are subject to change without notice.

© 2013 Glenair, Inc.

250-013
MIL-DTL-5015 Type Hermetic
Threaded Coupling Box Mount Receptacle Connector
MS3142 Type

250	-	013	Z1	14	-	6	P	X

Series 250 MIL-DTL-5015 Type Hermetic

Material Designation
FT = Fused Tin over Ferrous Steel
Z1 = Passivated Stainless Steel

Shell Size

Connector Style
Box Mount Hermetic Receptacle

Insert Arrangement
Per MIL-STD-1651 (See Page G-2)

Termination Type
P = Solder Cup
X = Eyelet

Alternate Key Position
W, X, Y, or Z (Omit for Normal) (See Page G-4)

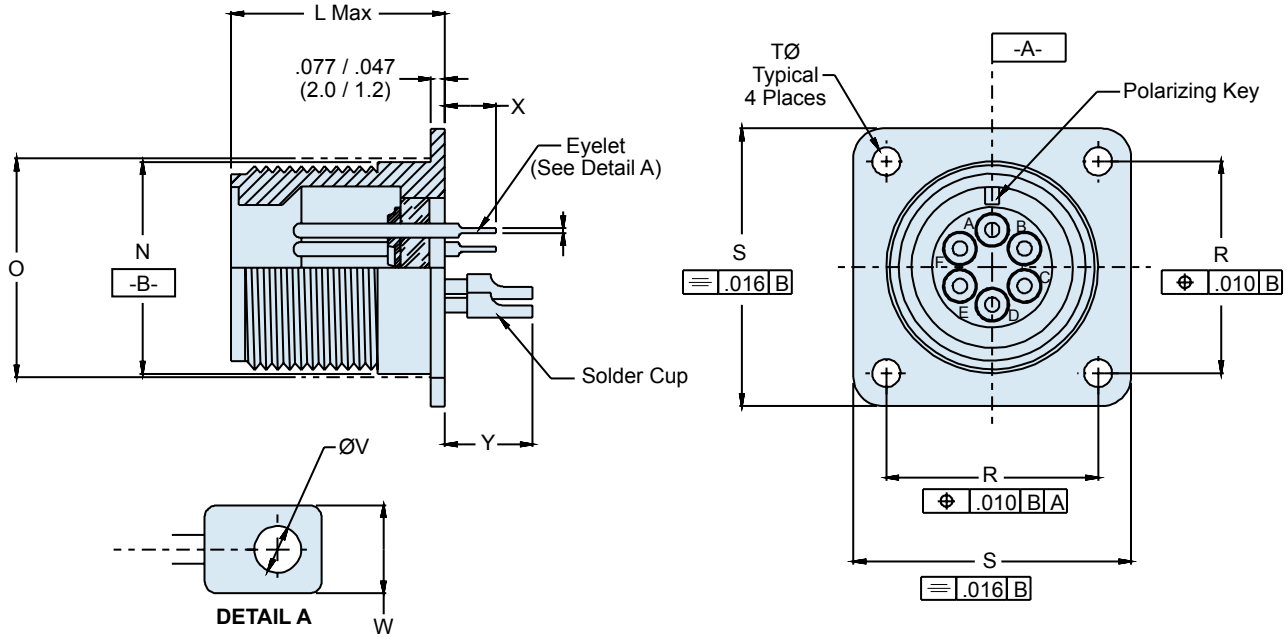

APPLICATION NOTES

1. To be identified with manufacturer's name, part number and date code, space permitting.
2. Front panel mount square flange receptacle with through mounting holes.
3. Material/Finish:

   Shell* - Fused tin over ferrous steel/Z1 passivated stainless steel.
   Contacts - 52 Nickel alloy/gold plate
   Seals - Silicone elastomer/N.A.
   Insulation - Glass beads, NOIBN/N.A.
4. Glenair 250-013 will mate with any MIL-DTL-5015 Series threaded coupling plug of same size and insert polarization.
5. Performance:

   Hermeticity - <1 x 10^{-7} cc/Sec @ 1 Atm. differential.
   Dielectric Withstanding Voltage - See Table II.
   Insulation Resistance - 5000 Megohms min @ 500VDC.
6. Metric Dimensions (mm) are indicated in parentheses.

* Additional shell materials available, including titanium and Inconel®. Consult factory for ordering information.

Dimensions in Inches (millimeters) are subject to change without notice.

© 2013 Glenair, Inc. U.S. CAGE Code 06324 Printed in U.S.A.



TABLE I: CONTACT DIMENSIONS

Contact Size	X Max	Y Max	Z Min	V Min	W Max
16	.219 (5.6)	.375 (9.5)	.020 (0.5)	.065 (1.7)	.115 (2.9)
12	.281 (7.1)	.516 (13.1)	.020 (0.5)	.096 (2.4)	.190 (4.8)
8	-	.719 (18.3)	-	-	-
4	-	.980 (24.9)	-	-	-
0	-	.980 (24.9)	-	-	-

HERMETIC LEAK RATE MOD CODES	
Designator	Required Leak Rate
–585A	1 x 10^{-10} cc Helium per second
–585B	1 x 10^{-9} cc Helium per second
–585C	1 x 10^{-8} cc Helium per second

TABLE II: SERVICE RATING

Service Rating	Working Voltage (Volts RMS)
INST	200
A	500
D	900
E	1250
B	1750
C	3000

TABLE III: CONNECTOR DIMENSIONS

Size	L Maximum Contact Size		ØN +.000 -.062 (+ 0 -1.6)	ØO (Ref) Mounting Hole	R T.P C —— C	S ±.031 (0.8)	ØT ±.005 (0.1)
	16, 12, 8	4, 0					
8S	.730 (18.5)	-	.532 (13.5)	.562 (14.3)	.594 (15.1)	.875 (22.2)	.120 (3.0)
10S	.730 (18.5)	-	.656 (16.7)	.688 (17.5)	.719 (18.3)	1.000 (25.4)	.120 (3.0)
10SL	.730 (18.5)	-	.656 (16.7)	.688 (17.5)	.719 (18.3)	1.000 (25.4)	.120 (3.0)
12S	.730 (18.5)	-	.782 (19.9)	.812 (20.6)	.812 (20.6)	1.094 (27.8)	.120 (3.0)
12	.915 (23.2)	-	.782 (19.9)	.812 (20.6)	.812 (20.6)	1.094 (27.8)	.120 (3.0)
14S	.730 (18.5)	-	.906 (23.0)	.938 (23.8)	.906 (23.0)	1.188 (30.2)	.120 (3.0)
14	.915 (23.2)	-	.906 (23.0)	.938 (23.8)	.906 (23.0)	1.188 (30.2)	.120 (3.0)
16S	.730 (18.5)	1.040 (26.4)	1.032 (26.2)	1.062 (27.0)	.969 (24.6)	1.281 (32.5)	.120 (3.0)
16	.915 (23.2)	1.040 (26.4)	1.032 (26.2)	1.062 (27.0)	.969 (24.6)	1.281 (32.5)	.120 (3.0)
18	.915 (23.2)	1.040 (26.4)	1.156 (29.4)	1.188 (30.2)	1.062 (27.0)	1.375 (34.9)	.120 (3.0)
20	.915 (23.2)	1.040 (26.4)	1.282 (32.6)	1.312 (33.3)	1.156 (29.4)	1.500 (38.1)	.120 (3.0)
22	.915 (23.2)	1.040 (26.4)	1.406 (35.7)	1.483 (36.5)	1.250 (31.8)	1.625 (41.3)	.120 (3.0)
24	.915 (23.2)	1.040 (26.4)	1.532 (38.9)	1.562 (39.7)	1.375 (34.9)	1.750 (44.5)	.147 (3.7)
28	.915 (23.2)	1.040 (26.4)	1.782 (45.3)	1.812 (46.0)	1.562 (39.7)	2.000 (50.8)	.147 (3.7)
32	.915 (23.2)	1.040 (26.4)	2.032 (51.6)	2.062 (52.4)	1.750 (44.5)	2.250 (57.2)	.173 (4.4)
36	.915 (23.2)	1.040 (26.4)	2.282 (58.0)	2.312 (58.7)	1.938 (49.2)	2.500 (63.5)	.173 (4.4)
40	.915 (23.2)	1.040 (26.4)	2.532 (64.3)	2.562 (65.1)	2.188 (55.6)	2.750 (69.9)	.173 (4.4)
44	.915 (23.2)	1.040 (26.4)	2.782 (70.7)	2.812 (71.4)	2.375 (60.3)	3.000 (76.2)	.173 (4.4)
48	.915 (23.2)	1.040 (26.4)	3.032 (77.0)	3.062 (77.8)	2.625 (66.7)	3.250 (82.6)	.173 (4.4)

Dimensions in Inches (millimeters) are subject to change without notice.

© 2013 Glenair, Inc.
U.S. CAGE Code 06324
Printed in U.S.A.

250-014
MIL-DTL-5015 Type Hermetic
Threaded Coupling Solder Mount Receptacle Connector
MS3143 Type

250	-	014	Z1	14	-	6	P	X

Series 250 MIL-DTL-5015 Type Hermetic

Connector Style
Solder Mount Hermetic Receptacle

Material Designation
FT = Fused Tin over Ferrous Steel
Z1 = Passivated Stainless Steel

Shell Size

Insert Arrangement
Per MIL-STD-1651 (See Page G-2)

Termination Type
P = Solder Cup
X = Eyelet

Alternate Key Position
W, X, Y, or Z (Omit for Normal) (See Page G-4)

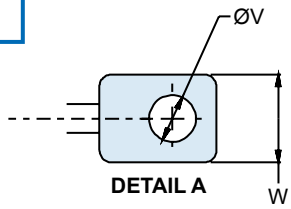

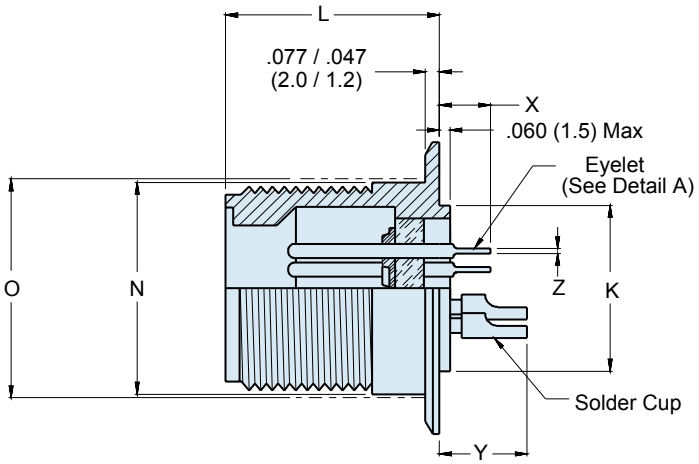

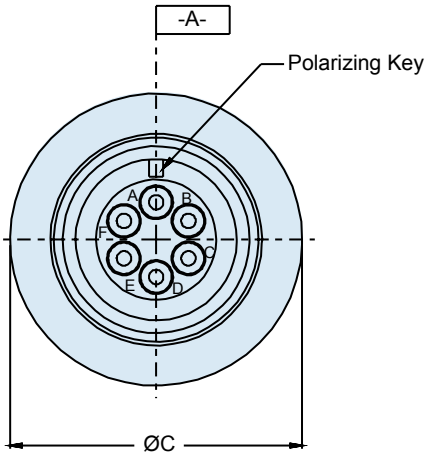

APPLICATION NOTES

1. To be identified with manufacturer's name, part number and date code, space permitting.
2. Front panel mount square flange receptacle with through mounting holes.
3. Material/Finish:

   Shell* - Fused tin over ferrous steel; Z1 passivated stainless steel; Nickel Plated Stainless Steel
   Contacts - 52 Nickel alloy/gold plate
   Seals - Silicone elastomer/N.A.
   Insulation - Glass beads, NOIBN/N.A.
4. Glenair 250-014 will mate with any MIL-DTL-5015 Series threaded coupling plug of same size and insert polarization.
5. Performance:

   Hermeticity - <1 x 10^{-7} cc/Sec @ 1 ATM differential.
   Dielectric Withstanding Voltage - See Table II.
   Insulation Resistance - 5000 Megohms min @ 500VDC.
6. Metric Dimensions (mm) are indicated in parentheses.

* Additional shell materials available, including titanium and Inconel®. Consult factory for ordering information.

Dimensions in Inches (millimeters) are subject to change without notice.

© 2013 Glenair, Inc. U.S. CAGE Code 06324 Printed in U.S.A.

250-014
MIL-DTL-5015 Type Hermetic
Threaded Coupling Solder Mount Receptacle Connector
MS3143 Type

TABLE I: CONTACT DIMENSIONS

Contact Size	X Max	Y Max	Z Min	V Min	W Max
16	.219 (5.6)	.375 (9.5)	.020 (0.5)	.065 (1.7)	.115 (2.9)
12	.281 (7.1)	.516 (13.1)	.020 (0.5)	.096 (2.4)	.190 (4.8)
8	-	.719 (18.3)	-	-	-
4	-	.980 (24.9)	-	-	-
0	-	.980 (24.9)	-	-	-

HERMETIC LEAK RATE MOD CODES	
Designator	**Required Leak Rate**
–585A	1 x 10^{-10} cc Helium per second
–585B	1 x 10^{-9} cc Helium per second
–585C	1 x 10^{-8} cc Helium per second

TABLE II: SERVICE RATING

Service Rating	Working Voltage (Volts RMS)
INST	200
A	500
D	900
E	1250
B	1750
C	3000

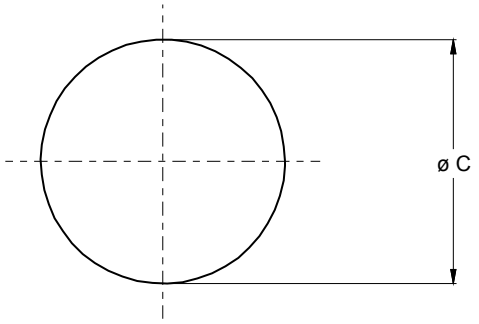

Recommended Panel Cut-Out

TABLE III: CONNECTOR DIMENSIONS

Size	C Dia ±.010 (0.25)	K Dia ±.010 (0.25)	L Max Contact Size		N Dia +.000 -.062 (+.000 -.1.6)	O Dia (Ref) Mtg Hole
			16, 12 & 8	4 & 0		
8S	.750 (19.1)	.428 (10.9)	.730 (18.5)	-	.532 (13.5)	.562 (14.3)
10S	.875 (22.2)	.490 (12.4)	.730 (18.5)	-	.656 (16.7)	.688 (17.5)
10SL	.875 (22.2)	.490 (12.4)	.730 (18.5)	-	.656 (16.7)	.688 (17.5)
12S	1.000 (25.4)	.646 (16.4)	.730 (18.5)	-	.782 (19.9)	.812 (20.6)
12	1.000 (25.4)	.646 (16.4)	.915 (23.2)	-	.782 (19.9)	.812 (20.6)
14S	1.125 (28.6)	.709 (18.0)	.730 (18.5)	-	.906 (23.0)	.938 (23.8)
14	1.125 (28.6)	.709 (18.0)	.915 (23.2)	-	.906 (23.0)	.938 (23.8)
16S	1.250 (31.8)	.834 (21.2)	.730 (18.5)	1.040 (26.4)	1.032 (26.2)	1.062 (27.0)
16	1.250 (31.8)	.834 (21.2)	.834 (21.2)	1.040 (26.4)	1.032 (26.2)	1.062 (27.0)
18	1.375 (34.9)	.959 (24.4)	.915 (23.2)	1.040 (26.4)	1.156 (29.4)	1.188 (30.2)
20	1.500 (38.1)	1.146 (29.1)	.915 (23.2)	1.040 (26.4)	1.282 (32.6)	1.312 (33.3)
22	1.625 (41.3)	1.240 (31.5)	.915 (23.2)	1.040 (26.4)	1.406 (35.7)	1.438 (36.5)
24	1.750 (44.5)	1.365 (34.7)	.915 (23.2)	1.040 (26.4)	1.532 (38.9)	1.562 (39.7)
28	2.000 (50.8)	1.615 (41.0)	.915 (23.2)	1.040 (26.4)	1.782 (45.3)	1.812 (46.0)
32	2.250 (57.2)	1.865 (47.4)	.915 (23.2)	1.040 (26.4)	2.032 (51.6)	1.062 (27.0)
36	2.500 (63.5)	2.115 (53.7)	.915 (23.2)	1.040 (26.4)	2.282 (58.0)	2.500 (63.5)
40	2.750 (69.9)	2.365 (60.1)	.915 (23.2)	1.040 (26.4)	2.532 (64.3)	2.750 (69.9)
44	3.000 (76.2)	2.615 (66.4)	.915 (23.2)	1.040 (26.4)	2.782 (70.7)	3.000 (76.2)
48	3.250 (82.6)	2.865 (72.8)	.915 (23.2)	1.040 (26.4)	3.032 (77.0)	3.250 (82.6)

Dimensions in Inches (millimeters) are subject to change without notice.

© 2013 Glenair, Inc.
U.S. CAGE Code 06324
Printed in U.S.A.

250-015
MIL-DTL-5015 Type Hermetic
Threaded Coupling Box Mount Receptacle Connector
MS3142 Type

Connector Style
Box Mount Hermetic Receptacle

Insert Arrangement
Per MIL-STD-1651 (See Page G-2)

Alternate Key Position
W, X, Y, or Z *(Omit for Normal) (See Page G-4)*

250	-	015	Z1	14	-	6	P	X

Series 250 MIL-DTL-5015 Type Hermetic

Material Designation
FT *= Fused Tin over Ferrous Steel*
Z1 *= Passivated Stainless Steel*
P *= Stainless Steel, Nickel Plated*

Shell Size

Termination Type
P *= Solder Cup*
X *= Eyelet*

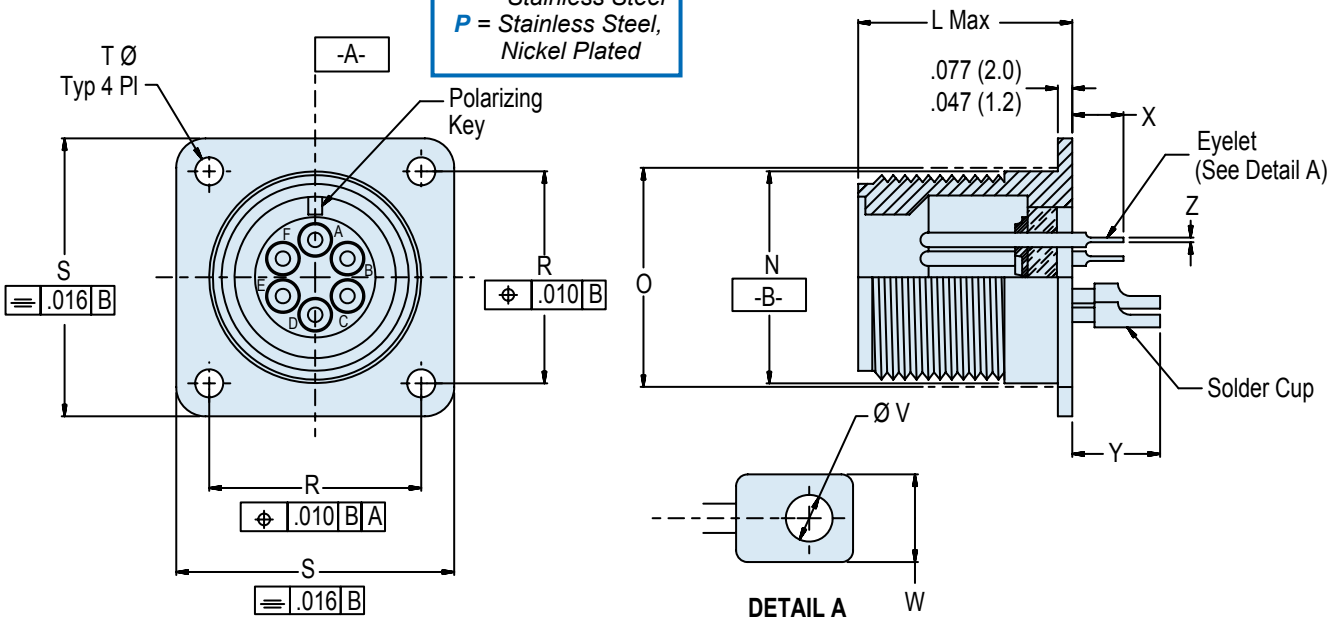

APPLICATION NOTES

1. Material/Finish:
   Shell: FT - Fused Tin over Carbon Steel
   Z1 - Passivated Stainless Steel
   P - Stainless Steel,Nickel Plated
2. Assembly to be identified with Glenair's name, part number and date code, space permitting.
3. Performance:
   Hermeticity - <1_X10^-7 cca/Sec @ 1 atmosphere differential.
   Dielectric Withstanding Voltage - See Table II.
   Insulation Resistance - 5000 Megohms minimum @ 500VDC.
4. Glenair 250-015 will mate with any MIL-DTL-5015 threaded coupling plug of same size and insert polarization.
5. Metric dimensions (mm) are in parenthesis.

Dimensions in Inches (millimeters) are subject to change without notice.

© 2013 Glenair, Inc.

TABLE I: CONTACT DIMENSIONS

Contact Size	X Max	Y Max	Z Min	V Min	W Max
16	.219 (5.6)	.375 (9.5)	.020 (0.5)	.065 (1.7)	.115 (2.9)
12	.281 (7.1)	.516 (13.1)	.020 (0.5)	.096 (2.4)	.190 (4.8)
8	-	.719 (18.3)	-	-	-
4	-	.980 (24.9)	-	-	-
0	-	.980 (24.9)	-	-	-

TABLE II: SERVICE RATING

Service Rating	Working Voltage (Volts RMS)
INST	200
A	500
D	900
E	1250
B	1750
C	3000

HERMETIC LEAK RATE MOD CODES

Designator	Required Leak Rate
–585A	1 x 10^{-10} cc Helium per second
–585B	1 x 10^{-9} cc Helium per second
–585C	1 x 10^{-8} cc Helium per second

TABLE III: CONNECTOR DIMENSIONS

Size	L Max Contact Size		N Dia +.000 -.062 (+.000 -.1.6)	O Dia (Ref) Mtg Hole	R T.P C——C	S .031 (0.79)	T Dia ± .005 (0.13)
	16, 12 & 8	4 & 0					
8S	.730 (18.5)	-	.532 (13.5)	.562 (14.3)	.594 (15.1)	.875 (22.2)	.120 (3.0)
10S	.730 (18.5)	-	.656 (16.7)	.688 (17.5)	.719 (18.3)	1.000 (25.4)	.120 (3.0)
10SL	.730 (18.5)	-	.656 (16.7)	.688 (17.5)	.719 (18.3)	1.000 (25.4)	.120 (3.0)
12S	.730 (18.5)	-	.782 (19.9)	.812 (20.6)	.812 (20.6)	1.094 (27.8)	.120 (3.0)
12	.915 (23.2)	-	.782 (19.9)	.812 (20.6)	.812 (20.6)	1.094 (27.8)	.120 (3.0)
14S	.730 (18.5)	-	.906 (23.0)	.938 (23.8)	.906 (23.0)	1.188 (30.2)	.120 (3.0)
14	.915 (23.2)	-	.906 (23.0)	.938 (23.8)	.906 (23.0)	1.188 (30.2)	.120 (3.0)
16S	.730 (18.5)	1.040 (26.4)	1.032 (26.2)	1.062 (27.0)	.969 (24.6)	1.281 (32.5)	.120 (3.0)
16	.915 (23.2)	1.040 (26.4)	1.032 (26.2)	1.062 (27.0)	.969 (24.6)	1.281 (32.5)	.120 (3.0)
18	.915 (23.2)	1.040 (26.4)	1.156 (29.4)	1.188 (30.2)	1.062 (27.0)	1.375 (34.9)	.120 (3.0)
20	.915 (23.2)	1.040 (26.4)	1.282 (32.6)	1.312 (33.3)	1.156 (29.4)	1.500 (38.1)	.120 (3.0)
22	.915 (23.2)	1.040 (26.4)	1.406 (35.7)	1.438 (36.5)	1.250 (31.8)	1.625 (41.3)	.120 (3.0)
24	.915 (23.2)	1.040 (26.4)	1.532 (38.9)	1.562 (39.7)	1.375 (34.9)	1.750 (44.5)	.147 (3.7)
28	.915 (23.2)	1.040 (26.4)	1.782 (45.3)	1.812 (46.0)	1.562 (39.7)	2.000 (50.8)	.147 (3.7)
32	.915 (23.2)	1.040 (26.4)	2.032 (51.6)	2.062 (52.3)	1.750 (44.5)	2.250 (57.2)	.173 (4.4)
36	.915 (23.2)	1.040 (26.4)	2.282 (58.0)	2.312 (58.7)	1.938 (49.2)	2.500 (63.5)	.173 (4.4)
40	.915 (23.2)	1.040 (26.4)	2.532 (64.3)	2.562 (65.1)	2.188 (55.6)	2.750 (69.9)	.173 (4.4)
44	.915 (23.2)	1.040 (26.4)	2.782 (70.7)	2.812 (71.4)	2.375 (60.3)	3.000 (76.2)	.173 (4.4)
48	.915 (23.2)	1.040 (26.4)	3.032 (77.0)	3.062 (77.8)	2.625 (66.7)	3.250 (82.6)	.173 (4.4)

Dimensions in Inches (millimeters) are subject to change without notice.

© 2013 Glenair, Inc.

250-016
MIL-DTL-5015 Type Hermetic
Threaded Coupling Solder Mount Receptacle Connector
MS3143 Type Sockets

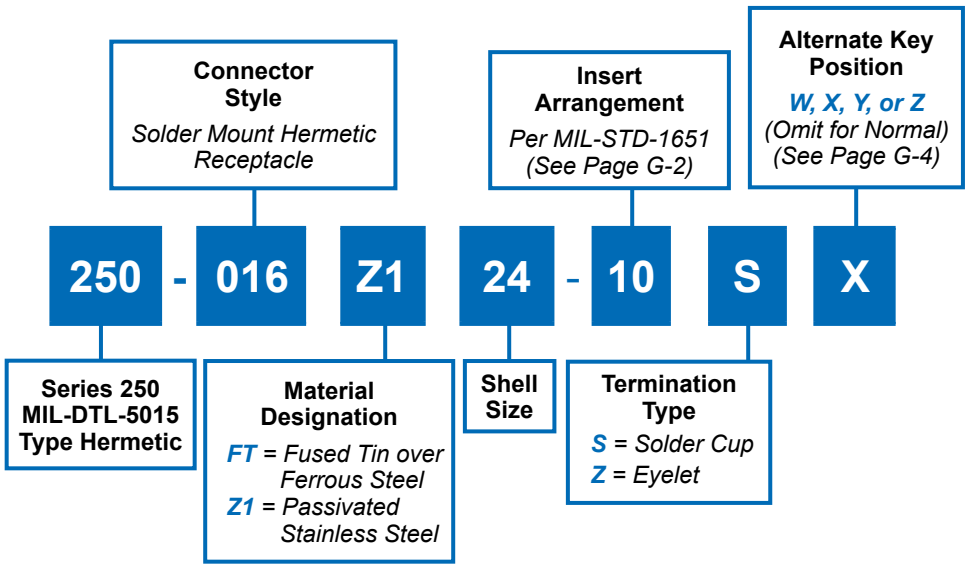

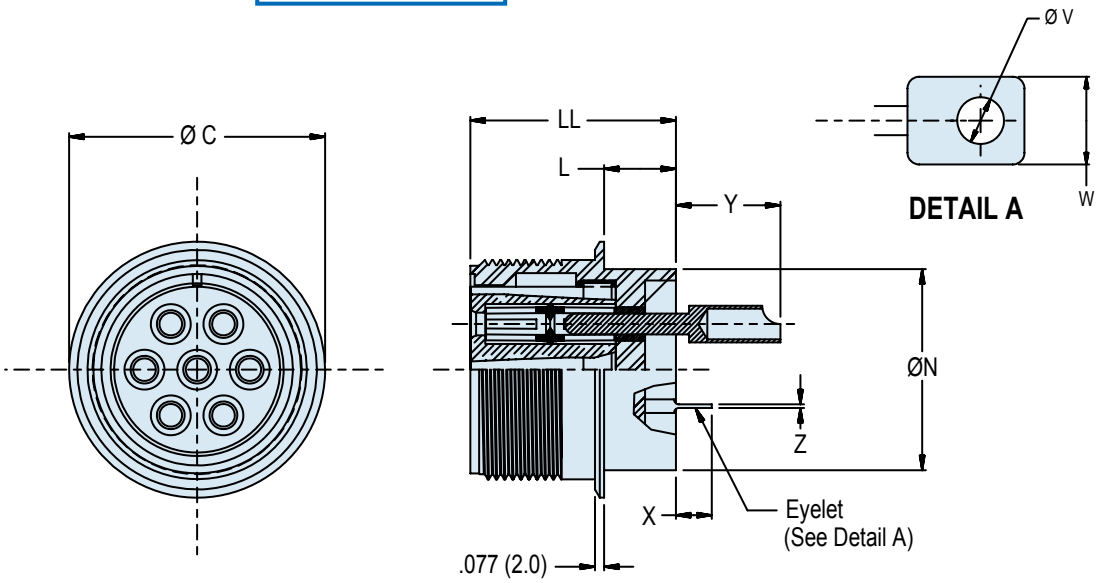

APPLICATION NOTES

1. Material/Finish:
   Shell: FT - Fused Tin over Carbon Steel
   Z1 - Passivated Stainless Steel
   Contacts - 52 Nickel Alloy/Gold Plate
   Sockets - Copper Alloy/Gold Plate
   Insulator - Glass/N.A.
   Socket Insulator - Rigid Dielectric/N.A.
2. Assembly to be identified with Glenair's name, part number and date code, space permitting.
3. Performance:
   Hermeticity - <1_X10^-7 cc/Sec @ 1 atmosphere differential.
   Dielectric Withstanding Voltage - See Table II.
   Insulation Resistance - 5000 Megohms minimum @ 500VDC.
4. Glenair 250-016 will mate with any MIL-DTL-5015 threaded coupling plug of same size and insert polarization.
5. Metric dimensions (mm) are in parenthesis.

Dimensions in Inches (millimeters) are subject to change without notice.

© 2013 Glenair, Inc.

TABLE I: CONTACT DIMENSIONS					
Contact Size	X Max	Y Max	Z Min	V Min	W Max
16	.219 (5.6)	.375 (9.5)	.020 (0.5)	.065 (1.7)	.115 (2.9)
12	.281 (7.1)	.516 (13.1)	.020 (0.5)	.096 (2.4)	.190 (4.8)
8	-	.719 (18.3)	-	-	-
4	-	.980 (24.9)	-	-	-
0	-	.980 (24.9)	-	-	-

TABLE II: SERVICE RATING	
Service Rating	Working Voltage (Volts RMS)
INST	200
A	500
D	900
E	1250
B	1750
C	3000

HERMETIC LEAK RATE MOD CODES	
Designator	Required Leak Rate
–585A	1 x 10^{-10} cc Helium per second
–585B	1 x 10^{-9} cc Helium per second
–585C	1 x 10^{-8} cc Helium per second

TABLE III: CONNECTOR DIMENSIONS					
Size	C Dia ± .010 (0.3)	L ± .010 (0.3)	LL Max	N Dia + .000 - .062	O Dia (Ref) Mtg Hole
12S	1.000 (25.4)	.438 (11.1)	1.094 (27.8)	.782 (19.9)	.812 (20.6)
12	1.000 (25.4)	.438 (11.1)	1.282 (32.6)	.782 (19.9)	.812 (20.6)
14S	1.125 (28.6)	.438 (11.1)	1.094 (27.8)	.906 (23.0)	.938 (23.8)
14	1.125 (28.6)	.438 (11.1)	1.282 (32.6)	.906 (23.0)	.938 (23.8)
16S	1.250 (31.8)	.438 (11.1)	1.094 (27.8)	1.032 (26.2)	1.062 (27.0)
16	1.250 (31.8)	.438 (11.1)	1.282 (32.6)	1.032 (26.2)	1.062 (27.0)
18	1.375 (34.9)	.438 (11.1)	1.282 (32.6)	1.156 (29.4)	1.188 (30.2)
20	1.500 (38.1)	.438 (11.1)	1.282 (32.6)	1.282 (32.6)	1.312 (33.3)
22	1.625 (41.3)	.438 (11.1)	1.282 (32.6)	1.406 (35.7)	1.438 (36.5)
24	1.750 (44.5)	.563 (14.3)	1.406 (35.7)	1.532 (38.9)	1.562 (39.7)
28	2.000 (50.8)	.563 (14.3)	1.406 (35.7)	1.782 (45,3)	1.812 (46.0)
32	2.250 (57.2)	.563 (14.3)	1.406 (35.7)	2.032 (51.6)	2.062 (53.4)
36	2.500 (63.5)	.563 (14.3)	1.406 (35.7)	2.282 (58.0)	2.500 (63.5)
40	2.750 (69.9)	.563 (14.3)	1.406 (35.7)	2.532 (64.3)	2.750 (69.9)
44	3.000 (76.2)	.563 (14.3)	1.406 (35.7)	2.782 (70.7)	3.000 (76.2)
48	3.250 (82.6)	.563 (14.3)	1.406 (35.7)	3.032 (77.0)	3.250 (82.6)

Dimensions in Inches (millimeters) are subject to change without notice.

© 2013 Glenair, Inc.
U.S. CAGE Code 06324
Printed in U.S.A.

250-025
MIL-DTL-5015 Type Hermetic
Threaded Coupling Flangeless Mount Receptacle Connector
MS3143 Type

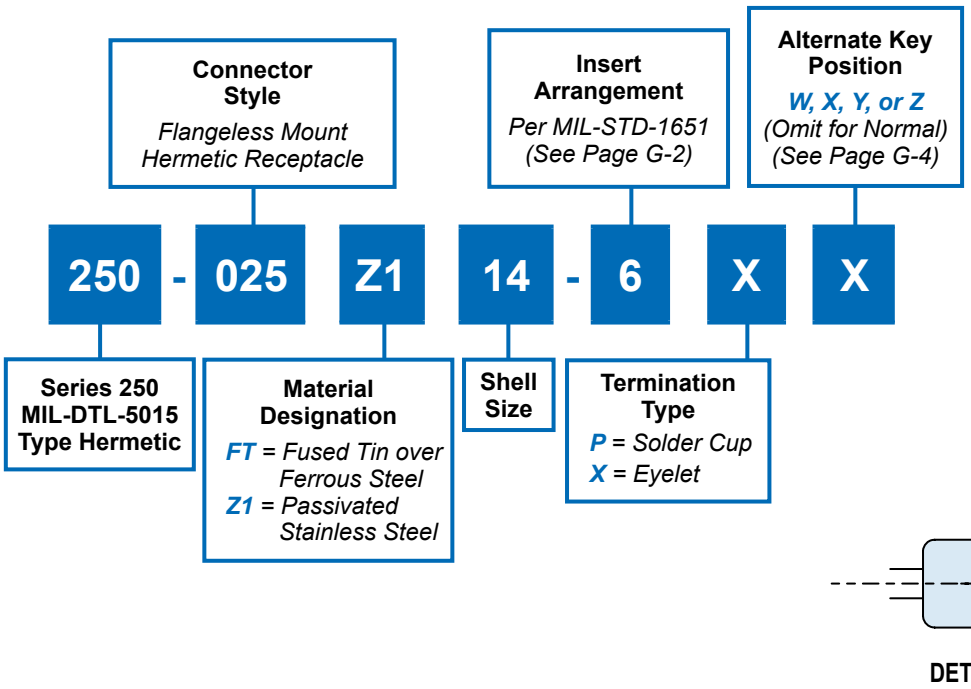

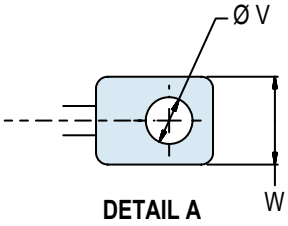

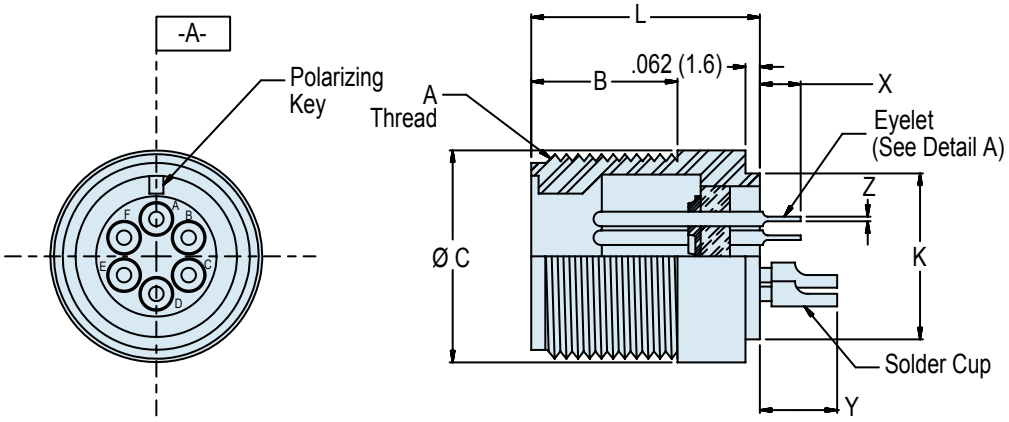

APPLICATION NOTES

1. Material/Finish:
   Shell: FT - Fused Tin over Carbon Steel
   Z1 - Passivated Stainless Steel
   Contacts - 52 Nickel Alloy/Gold Plate
   Seals - Silicone Elastomer/N.A.
   Insulator - Full Glass
2. Assembly to be identified with Glenair's name, part number and date code, space permitting.
3. Performance:
   Hermeticity - <1_X10^-7 cc/Sec @ 1 atmosphere differential.
   Dielectric Withstanding Voltage - See Table II.
   Insulation Resistance - 5000 Megohms minimum @ 500VDC.
4. Glenair 250-016 will mate with any MIL-DTL-5015 threaded coupling plug of same size and insert polarization.
5. Metric dimensions (mm) are in parenthesis.

Dimensions in Inches (millimeters) are subject to change without notice.

© 2013 Glenair, Inc.

250-025
MIL-DTL-5015 Type Hermetic
Threaded Coupling Flangeless Mount Receptacle Connector
MS3143 Type

TABLE I: CONTACT DIMENSIONS					
Contact Size	X Max	Y Max	Z Min	V Min	W Max
16	.219 (5.6)	.375 (9.5)	.020 (0.5)	.065 (1.7)	.115 (2.9)
12	.281 (7.1)	.516 (13.1)	.020 (0.5)	.096 (2.4)	.190 (4.8)
8	-	.719 (18.3)	-	-	-
4	-	.980 (24.9)	-	-	-
0	-	.980 (24.9)	-	-	-

TABLE II: SERVICE RATING	
Service Rating	Working Voltage (Volts RMS)
INST	200
A	500
D	900
E	1250
B	1750
C	3000

HERMETIC LEAK RATE MOD CODES	
Designator	Required Leak Rate
–585A	1 x 10^{-10} cc Helium per second
–585B	1 x 10^{-9} cc Helium per second
–585C	1 x 10^{-8} cc Helium per second

TABLE III: CONNECTOR DIMENSIONS						
Size	A Thread Class 2A	B Min Thread	C Dia ± .010 (0.3)	K Dia ± .010 (0.3)	L Max Contact Size	
					16, 12, 8	4 and 0
8S	.500-28 UNEF	.375 (9.5)	.500 (12.7)	.438 (11.1)	.730 (18.5)	—
10S	.625-24 UNEF	.375 (9.5)	.625 (15.9)	.500 (12.7)	.730 (18.5)	—
10SL	.625-24 UNEF	.375 (9.5)	.625 (15.9)	.500 (12.7)	.730 (18.5)	—
12S	.750-20 UNEF	.375 (9.5)	.750 (19.1)	.656 (16.7)	.730 (18.5)	—
12	.750-20 UNEF	.625 (15.9)	.750 (19.1)	.656 (16.7)	.915 (23.2)	—
14S	.875-20 UNEF	.375 (9.5)	.875 (22.2)	.719 (18.3)	.730 (18.5)	—
14	.875-20 UNEF	.625 (15.9)	.875 (22.2)	.719 (18.3)	.915 (23.2)	—
16S	1.000-20 UNEF	.375 (9.5)	1.000 (25.4)	.844 (21.4)	.730 (18.5)	1.040 (26.4)
16	1.000-20 UNEF	.625 (15.9)	1.000 (25.4)	.844 (21.4)	.915 (23.2)	1.040 (26.4)
18	1.125-18 UNEF	.625 (15.9)	1.125 (28.6)	.969 (24.6)	.915 (23.2)	1.040 (26.4)
20	1.250-18 UNEF	.625 (15.9)	1.250 (31.8)	1.156 (29.4)	.915 (23.2)	1.040 (26.4)
22	1.375-18 UNEF	.625 (15.9)	1.375 (34.9)	1.250 (31.8)	.915 (23.2)	1.040 (26.4)
24	1.500-18 UNEF	.625 (15.9)	1.500 (38.1)	1.375 (34.9)	.915 (23.2)	1.040 (26.4)
28	1.750-18 UNS	.625 (15.9)	1.750 (44.5)	1.625 (41.3)	.915 (23.2)	1.040 (26.4)
32	2.000-18 UNS	.625 (15.9)	2.000 (50.8)	1.875 (47.6)	.915 (23.2)	1.040 (26.4)
36	2.250-16 UN	.625 (15.9)	2.250 (57.2)	2.125 (54.0)	.915 (23.2)	1.040 (26.4)
40	2.500-16 UN	.625 (15.9)	2.500 (63.5)	2.375 (60.3)	.915 (23.2)	1.040 (26.4)
44	2.750-16 UN	.625 (15.9)	2.750 (69.9)	2.625 (66.7)	.915 (23.2)	1.040 (26.4)
48	3.000-16 UN	.625 (15.9)	3.000 (76.2)	2.875 (73.0)	.915 (23.2)	1.040 (26.4)

Dimensions in Inches (millimeters) are subject to change without notice.

© 2013 Glenair, Inc.
U.S. CAGE Code 06324
Printed in U.S.A.

257-384
MIL-DTL-5015 Type Hermetic
Jam Nut Mount Mount Receptacle Connector
MS3404 Type

257	-	384	Z1	14	-	6	C	X	V

Connector Style
Jam Nut Mount Hermetic Receptacle

Insert Arrangement
Per MIL-STD-1651 (See Page G-2)

Alternate Key Position
W, X, Y, or Z (Omit for Normal) (See Page G-4)

Series 257 MIL-DTL-5015 Type Hermetic

Material Designation
FT = Fused Tin over Ferrous Steel
Z1 = Passivated Stainless Steel
ZL = Nickel Plated Stainless Steel

Shell Size

Termination Type
P = Solder Cup
C = PC Tail

O-Ring Material
(See Table III)

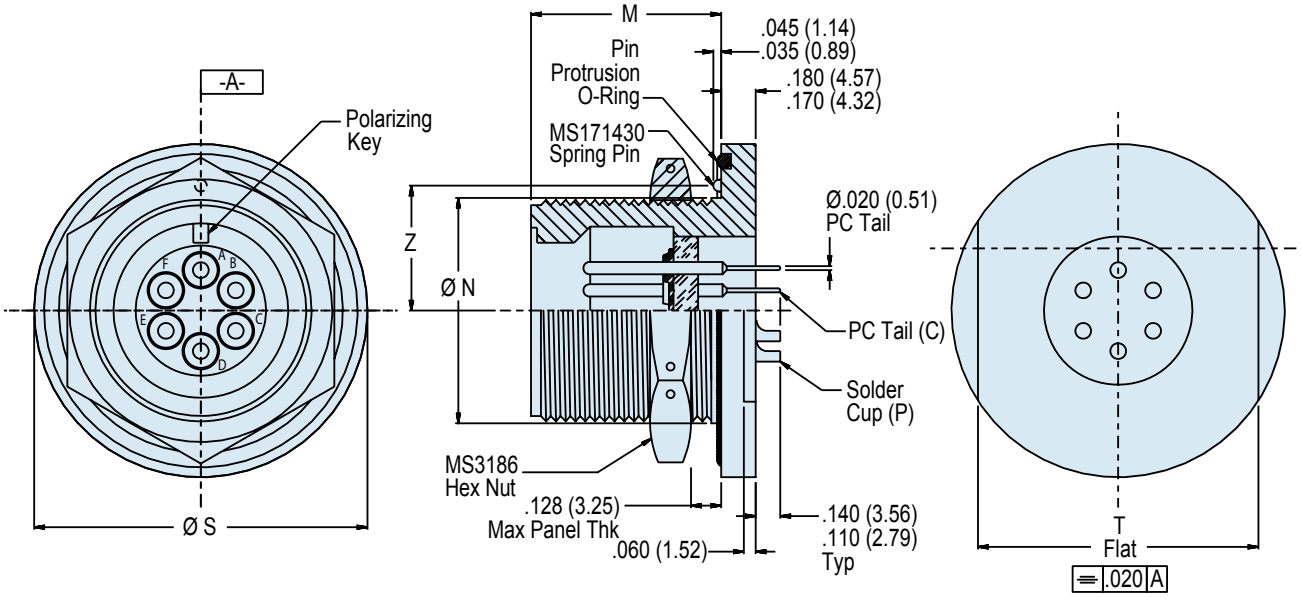

APPLICATION NOTES

1. Material/Finish:
   Shell: FT - Fused tin over Carbon steel
   Z1 - Passivated stainless steel
   ZL - Nickel plated stainless steel
   Contacts - 52 Nickel alloy/Gold plate
   Seals - Fluorosilicone elastomer/N.A.
   Insulator - Full vitreous glass
   O-Ring - Specify per Table III
2. Assembly to be identified with Glenair's name, part number and date code, space permitting.
3. Performance:
   Hermeticity - <1_X10^-7 cc/Sec @ 1 atmosphere differential.
   Dielectric Withstanding Voltage - See Table II.
   Insulation Resistance - 5000 Megohms minimum @ 500VDC.
4. Glenair 257-384 will mate with any MIL-DTL-5015 threaded coupling plug of same size and insert polarization.
5. Metric dimensions (mm) are in parenthesis.

Dimensions in Inches (millimeters) are subject to change without notice.

© 2013 Glenair, Inc.
U.S. CAGE Code 06324
Printed in U.S.A.

TABLE I: CONNECTOR DIMENSIONS

Size	M ± .005 (0.1)	Ø N +.000 -.005 (+0.0 -0.1)	Ø O +.015 -.000 (+0.4 -0.0)	Ø S ± .005 (0.1)	T ± .010 (0.3) Flats	Z ± .005 (0.1)
8S	.720 (9.5)	.500 (12.7)	.505 (12.8)	1.072 (27.2)	.865 (22.0)	.326 (8.3)
10S	.720 (9.5)	.625 (15.9)	.630 (16.0)	1.193 (30.3)	.990 (25.1)	.385 (9.8)
10SL	.720 (9.5)	.625 (15.9)	.630 (16.0)	1.193 (30.3)	.990 (25.1)	.385 (9.8)
12S	.720 (9.5)	.750 (19.1)	.755 (19.2)	1.317 (33.5)	1.050 (26.7)	.448 (11.4)
12	.966 (24.5)	.750 (19.1)	.755 (19.2)	1.317 (33.5)	1.050 (26.7)	.448 (11.4)
14S	.720 (9.5)	.875 (22.2)	.880 (22.4)	1.443 (36.7)	1.175 (29.8)	.510 (13.0)
14	.966 (24.5)	.875 (22.2)	.880 (22.4)	1.443 (36.7)	1.175 (29.8)	.510 (13.0)
16S	.720 (9.5)	1.000 (25.4)	1.005 (25.5)	1.567 (39.8)	1.300 (33.0)	.573 (14.6)
16	.966 (24.5)	1.000 (25.4)	1.005 (25.5)	1.567 (39.8)	1.300 (33.0)	.573 (14.6)
18	.966 (24.5)	1.125 (28.6)	1.130 (28.7)	1.693 (43.0)	1.425 (36.2)	.635 (16.1)
20	.966 (24.5)	1.250 (31.8)	1.255 (31.9)	1.817 (46.2)	1.550 (39.4)	.698 (17.7)
22	.966 (24.5)	1.375 (34.9)	1.380 (35.1)	1.943 (49.4)	1.550 (39.4)	.760 (19.3)
24	.966 (24.5)	1.500 (38.1)	1.505 (38.2)	2.067 (52.5)	1.800 (45.7)	.823 (20.9)
28	.966 (24.5)	1.750 (44.5)	1.755 (44.6)	2.317 (58.9)	1.925 (48.9)	.948 (24.1)
32	.966 (24.5)	2.000 (50.8)	2.005 (50.9)	2.567 (65.2)	2.175 (55.2)	1.073 (27.3)
36	.966 (24.5)	2.250 (57.2)	2.255 (57.3)	2.817 (71.6)	2.550 (64.8)	1.198 (30.4)
40	.966 (24.5)	2.500 (63.5)	2.505 (63.6)	3.061 (77.7)	2.800 (71.1)	1.323 (33.6)
44	.966 (24.5)	2.750 (69.9)	2.755 (70.0)	3.311 (84.1)	3.050 (77.5)	1.448 (36.8)
48	.966 (24.5)	3.000 (76.2)	3.005 (76.3)	3.561 (90.4)	3.300 (83.8)	1.573 (40.0)

TABLE II: SERVICE RATING

Service Rating	Test Voltages (Sea-Level) (Volts-RMS)	Working Voltage (Sea-Level) (Volts RMS)
INST	1000	200
A	2000	500
D	2800	900
E	3500	1250
B	4500	1750
C	7000	3000

HERMETIC LEAK RATE MOD CODES

Designator	Required Leak Rate
–585A	1 x 10^{-10} cc Helium per second
–585B	1 x 10^{-9} cc Helium per second
–585C	1 x 10^{-8} cc Helium per second

TABLE III: O-RINGS

Sym	Material
F	Fluorosilicone (Non-Conductive)
E	EPDM (Ethylene-Propylene)
V	Viton (Fluorocarbon, FKM)
N	Nitrile (Buna-N, NBR)
S	Silicone (ZZ-R-765)
B	Butyl Rubber (IIR)
K	Kalrez (FFKM)

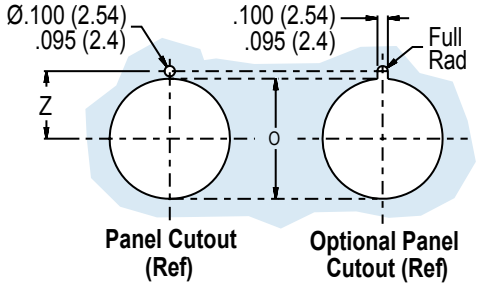

Dimensions in Inches (millimeters) are subject to change without notice.

© 2013 Glenair, Inc.

947-042
MIL-DTL-5015 Type Hermetic
Jam Nut Mount Bulkhead Feed-Through D Series Connector with Pin/Socket Contacts

Series 947 MIL-DTL-5015 D Series

Shell Size

Termination Type
P = Pin on Jam-Nut Side, Socket Opposite
S = Socket on Jam-Nut Side, Pin Opposite
PP = Pin on Both Sides (See Note 2)

947	-	042	-	36	-	12	P	X

Connector Style
042 = Jam-Nut Mount Hermetic Receptacle

Insert Arrangement
Per MIL-DTL-5015D (See Page G-2)

Alternate Key Position
W, X, Y, or Z (Omit for Normal) (See Page G-4)

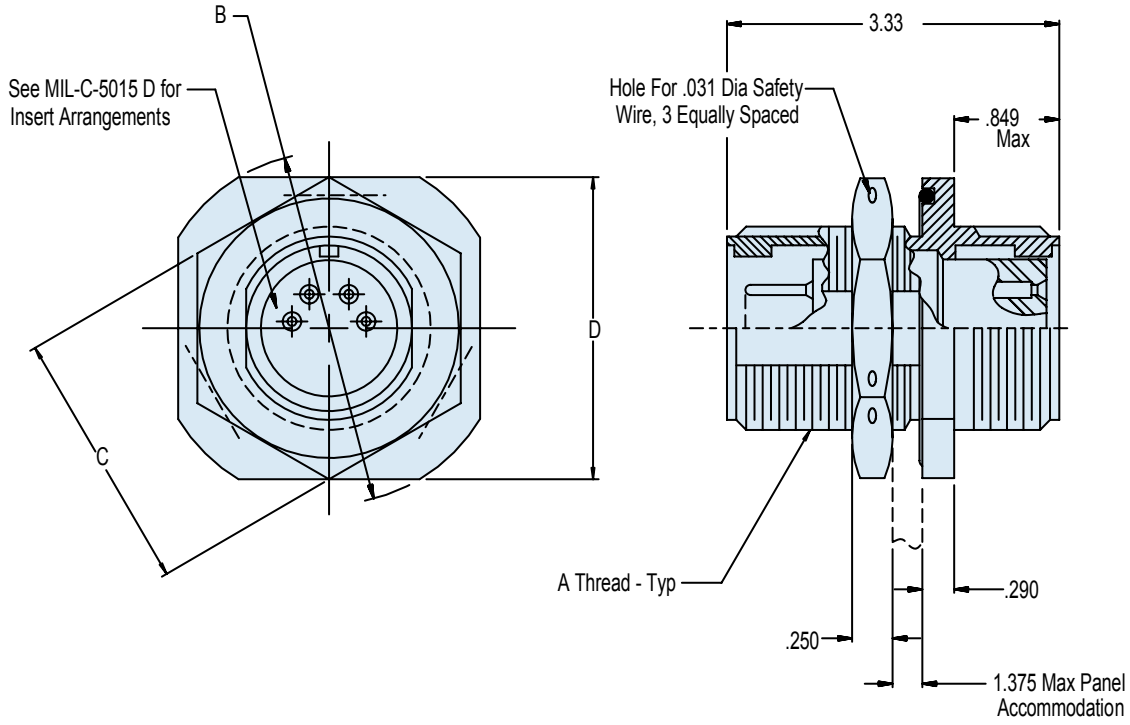

APPLICATION NOTES

1. Material/Finish:
   Jam-nut, hoods, lock-ring, shell* - Stainless steel/passivated.
   Contacts - Alloy 52/gold plated.
   Insulators - High-grade rigid dielectric, full glass or glass bead.
   O-Rings - Silicone/N.A.
2. For pin-to-pin, symmetrical layouts only. Power to a given contact on one end will result in power to contact directly opposite regardless of identification letter.
3. Hermeticity - Less than 1 x 10^{-7} cc/sec at one atmosphere. Not for use in liquid atmosphere. Connector rated to 200° C and 1000 PSI max.
4. Outgas for space application.
5. To be identified with manufacturer's name, part number and date code, space permitting.
6. Metric Dimensions (mm) are indicated in parentheses.

* Additional shell materials available, including titanium and Inconel®. Consult factory for ordering information.

Dimensions in Inches (millimeters) are subject to change without notice.

© 2013 Glenair, Inc.

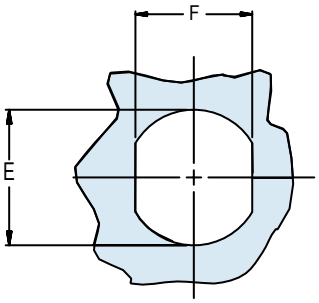

RECOMMENDED PANEL CUT-OUT

HERMETIC LEAK RATE MOD CODES	
Designator	**Required Leak Rate**
–585A	1 x 10^{-10} cc Helium per second
–585B	1 x 10^{-9} cc Helium per second
–585C	1 x 10^{-8} cc Helium per second

TABLE I: CONNECTOR AND CUT-OUT DIMENSIONS

Shell Size	A Thread Class 2A	B Dia Max	C Hex	D Flats	E Dia ± .005 (0.1)	F + .005 -.000 (+0.1 - 0.0)
08	1/2-28 UNEF	1.000 (25.4)	.688 (17.5)	.875 (22.2)	.510 (13.0)	.460 (11.7)
10	5/8-24 UNEF	1.125 (28.6)	.812 (20.6)	1.000 (25.4)	.635 (16.1)	.578 (14.7)
12	3/4-20 UNEF	1.250 (31.8)	.938 (23.8)	1.125 (28.6)	.760 (19.3)	.692 (17.6)
14	7/8-20 UNEF	1.375 (34.9)	1.062 (27.0)	1.250 (31.8)	.885 (22.5)	.817 (20.8)
16	1-20 UNEF	1.500 (38.1)	1.250 (31.8)	1.375 (34.9)	1.010 (25.7)	.942 (23.9)
18	1 1/8-18 UNEF	1.750 (44.5)	1.375 (34.9)	1.625 (41.3)	1.135 (28.8)	1.060 (26.9)
20	1 1/4-18 UNEF	1.875 (47.6)	1.500 (38.1)	1.750 (44.5)	1.260 (32.0)	1.185 (30.1)
22	1 3/8-18 UNEF	2.000 (50.8)	1.625 (41.3)	1.875 (47.6)	1.385 (35.2)	1.310 (33.3)
24	1 1/2-18 UNEF	2.188 (55.6)	1.750 (44.5)	2.000 (50.8)	1.510 (38.4)	1.435 (36.4)
28	1 3/4-18 UNEF	2.438 (61.9)	2.000 (50.8)	2.250 (57.2)	1.760 (44.7)	1.687 (42.8)
32	2-18 UNEF	2.688 (68.3)	2.250 (57.2)	2.500 (63.5)	2.010 (51.1)	1.937 (48.6)
36	2 1/4-18 UN	2.938 (74.6)	2.500 (63.5)	2.750 (69.9)	2.260 (57.4)	2.177 (55.3)

Dimensions in Inches (millimeters) are subject to change without notice.

© 2013 Glenair, Inc.
U.S. CAGE Code 06324
Printed in U.S.A.

947-056
MIL-DTL-5015 Type Hermetic
Jam Nut Mount Bulkhead Feed-Thru D Series Connector with Pin/Pin Contacts

Connector Style	Insert Arrangement
056 = Jam-Nut Mount Hermetic Receptacle	*Per MIL-DTL-5015 (See Page G2)*

947 - 056 - 16 - 12 X

- **947** — Series 947 MIL-DTL-5015 D Series
- **16** — Shell Size
- **X** — Alternate Key Position: *W, X, Y, or Z (Omit for Normal) (See Page G-4)*

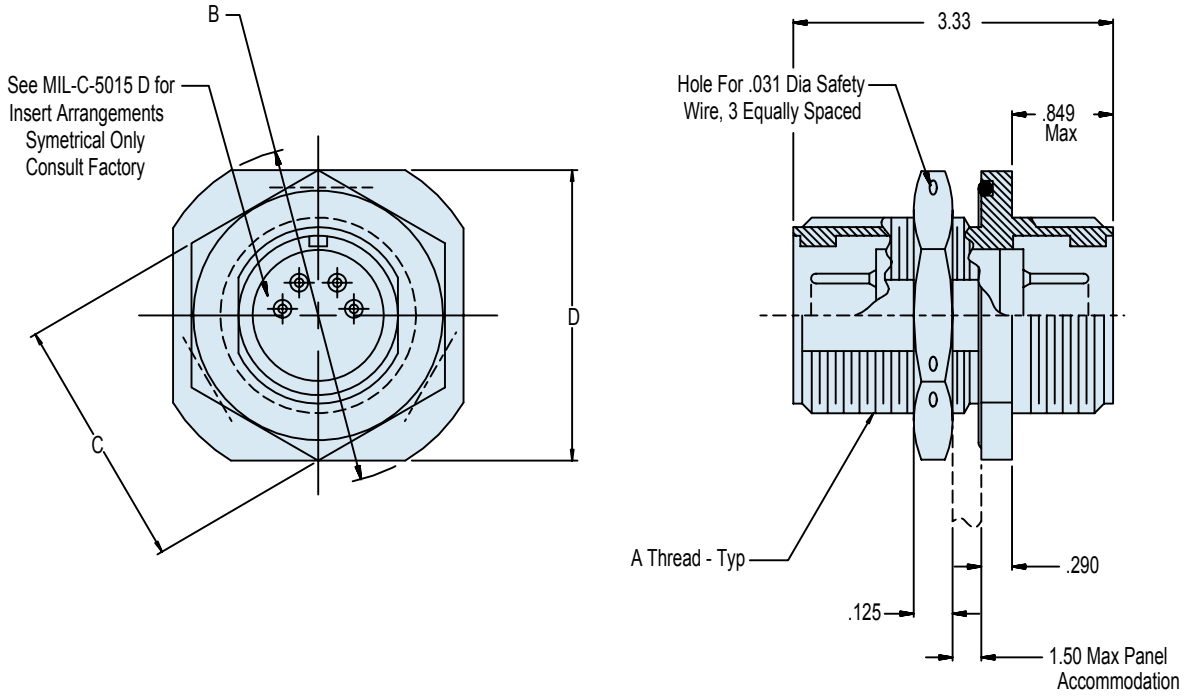

APPLICATION NOTES

1. Material/Finish:
   Jam-nut, lock-ring, shell* - Stainless steel/passivated.
   Contacts - Alloy 52/gold plated.
   Insulators - High-grade rigid dielectric, full glass or glass bead.
   O-Rings - Silicone/N.A.
2. For pin-to-pin, symmetrical layouts only. Power to a given contact on one end will result in power to contact directly opposite regardless of identification letter.
3. Hermeticity - Less than 1 x 10^{-7} cc/sec at one atmosphere. Not for use in liquid atmosphere.
4. Outgas for space application.
5. To be identified with manufacturer's name, part number and date code, space permitting.
6. Metric Dimensions (mm) are indicated in parentheses.

* Additional shell materials available, including titanium and Inconel®. Consult factory for ordering information.

Dimensions in Inches (millimeters) are subject to change without notice.

© 2013 Glenair, Inc.
U.S. CAGE Code 06324
Printed in U.S.A.

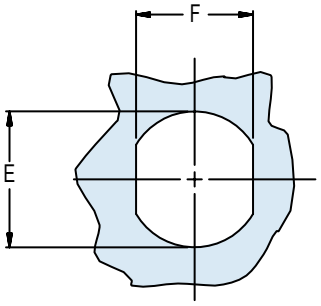

RECOMMENDED PANEL CUT-OUT

HERMETIC LEAK RATE MOD CODES	
Designator	**Required Leak Rate**
–585A	1 x 10^{-10} cc Helium per second
–585B	1 x 10^{-9} cc Helium per second
–585C	1 x 10^{-8} cc Helium per second

TABLE I: CONNECTOR AND CUT-OUT DIMENSIONS

Shell Size	A Thread Class 2A	B Dia Max	C Hex	D Flats	E Dia ± .005 (0.1)	F + .005 -.000 (+0.1 - 0.0)
08	1/2-28 UNEF	1.000 (25.4)	.688 (17.5)	.875 (22.2)	.510 (13.0)	.460 (11.7)
10	5/8-24 UNEF	1.125 (28.6)	.812 (20.6)	1.000 (25.4)	.635 (16.1)	.578 (14.7)
12	3/4-20 UNEF	1.250 (31.8)	.938 (23.8)	1.125 (28.6)	.760 (19.3)	.692 (17.6)
14	7/8-20 UNEF	1.375 (34.9)	1.062 (27.0)	1.250 (31.8)	.885 (22.5)	.817 (20.8)
16	1-20 UNEF	1.500 (38.1)	1.250 (31.8)	1.375 (34.9)	1.010 (25.7)	.942 (23.9)
18	1 1/8-18 UNEF	1.750 (44.5)	1.375 (34.9)	1.625 (41.3)	1.135 (28.8)	1.060 (26.9)
20	1 1/4-18 UNEF	1.875 (47.6)	1.500 (38.1)	1.750 (44.5)	1.260 (32.0)	1.185 (30.1)
22	1 3/8-18 UNEF	2.000 (50.8)	1.625 (41.3)	1.875 (47.6)	1.385 (35.2)	1.310 (33.3)
24	1 1/2-18 UNEF	2.188 (55.6)	1.750 (44.5)	2.000 (50.8)	1.510 (38.4)	1.435 (36.4)
28	1 3/4-18 UNEF	2.438 (61.9)	2.000 (50.8)	2.250 (57.2)	1.760 (44.7)	1.687 (42.8)
32	2-18 UNEF	2.688 (68.3)	2.250 (57.2)	2.500 (63.5)	2.010 (51.1)	1.937 (48.6)
36	2 1/4-16 UN	2.938 (74.6)	2.500 (63.5)	2.750 (69.9)	2.260 (57.4)	2.177 (55.3)

Dimensions in Inches (millimeters) are subject to change without notice.

© 2013 Glenair, Inc.
U.S. CAGE Code 06324
Printed in U.S.A.

947-259
MIL-DTL-5015 Type Hermetic
Panel Mount Bulkhead Feed-Thru

Basic Number	Shell Size			Contact Type		Panel Thickness
947-259	ZW	18	- 11	P	N	01
Material and Finish		Insert Arrangement *Per MIL-DTL-5015 (See Page G-2)*		Alternate Key Position *W, X, Y, or Z (N for Normal) (See Page G-4)*		

Contact Type
P = Pin on Jam-Nut Side, Socket Opposite
S = Socket on Jam-Nut Side, Pin Opposite
PP = Pin to Pin
SS = Socket to Socket

HERMETIC LEAK RATE MOD CODES	
Designator	**Required Leak Rate**
–585A	1 x 10^{-10} cc Helium per second
–585B	1 x 10^{-9} cc Helium per second
–585C	1 x 10^{-8} cc Helium per second

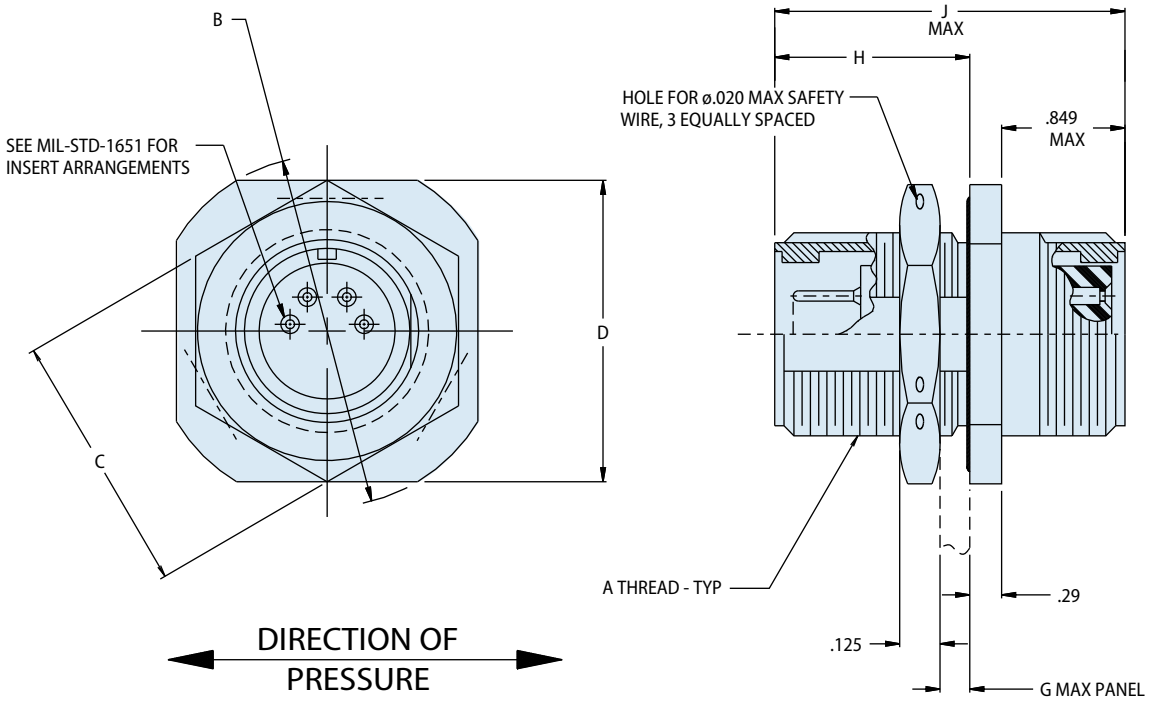

Dimensions in Inches (millimeters) are subject to change without notice.

© 2013 Glenair, Inc.

947-259
MIL-DTL-5015 Type Hermetic
Panel Mount Bulkhead Feed-Thru

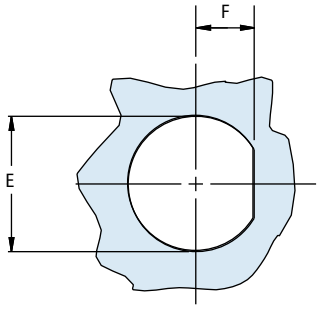

RECOMMENDED PANEL CUT-OUT

TABLE II			
Dash No.	G Max	H	J
01	.250	1.224	2.36
02	.500	1.474	2.62

TABLE I: CONNECTOR AND CUT-OUT DIMENSIONS

Shell Size	A Thread Class 2A	B Dia Max	C Hex	D Flats	E Dia ± .005 (0.1)	F Dim. Min.
8S	1/2-28 UNEF	1.000 (25.4)	.688 (17.5)	.875 (22.2)	.510 (13.0)	.219 (5.6)
10SL	5/8-24 UNEF	1.125 (28.6)	.812 (20.6)	1.000 (25.4)	.635 (16.1)	.281 (7.1)
12	3/4-20 UNEF	1.250 (31.8)	.938 (23.8)	1.125 (28.6)	.760 (19.3)	.344 (8.7)
12S	3/4-20 UNEF	1.250 (31.8)	.938 (23.8)	1.125 (28.6)	.760 (19.3)	.344 (8.7)
14	7/8-20 UNEF	1.375 (34.9)	1.062 (27.0)	1.250 (31.8)	.885 (22.5)	.406 (10.3)
14S	7/8-20 UNEF	1.375 (34.9)	1.062 (27.0)	1.250 (31.8)	.885 (22.5)	.406 (10.3)
16	1-20 UNEF	1.500 (38.1)	1.250 (31.8)	1.375 (34.9)	1.010 (25.7)	.469 (11.9)
16S	1-20 UNEF	1.500 (38.1)	1.250 (31.8)	1.375 (34.9)	1.010 (25.7)	.469 (11.9)
18	1 1/8-18 UNEF	1.650 (44.5)	1.375 (34.9)	1.625 (41.3)	1.135 (28.8)	.531 (13.5)
20	1 1/4-18 UNEF	1.875 (47.6)	1.500 (38.1)	1.750 (44.5)	1.260 (32.0)	.594 (15.1)
22	1 3/8-18 UNEF	2.000 (50.8)	1.625 (41.3)	1.875 (47.6)	1.385 (35.2)	.656 (16.7)
24	1 1/2-18 UNEF	2.188 (55.6)	1.750 (44.5)	2.000 (50.8)	1.510 (38.4)	.719 (18.3)
28	1 3/4-18 UNEF	2.438 (61.9)	2.000 (50.8)	2.250 (57.2)	1.760 (44.7)	.844 (21.4)
32	2-18 UNEF	2.688 (68.3)	2.250 (57.2)	2.500 (63.5)	2.010 (51.1)	.969 (24.6)
36	2 1/4-16 UN	2.938 (74.6)	2.500 (63.5)	2.750 (69.9)	2.260 (57.4)	1.089 (27.7)
40	2 1/2-16 UN	3.188 (81.0)	2.750 (69.9)	3.000 (76.2)	2.510 (63.7)	1.219 (31.0)
44	2 3/4-16 UN	3.438 (87.3)	3.000 (76.2)	3.250 (82.6)	2.760 (70.1)	1.344 (34.1)
48	3-16 UN	3.688 (93.7)	3.250 (82.6)	3.500 (88.9)	3.010 (76.5)	1.469 (37.3)

APPLICATION NOTES

1. To be identified with manufacturer's name, part number and date code, space permitting.
2. For pin/pin and socket/socket symmetrical layouts only, consult factory for available insert arrangements.
3. Power to a given contact on one end will result in power to contact directly opposite regardless of identification letter.
4. Hermeticity - Less than 1 x 10^{-7} cc/sec at one atmosphere.
5. Electrical safety limits must be established by the user. Peak voltage, switching surge, transient voltage, etc. should be used to determine the safety application.
6. Material/Finish*:

   Jam-nut, lock-ring, shell - stainless steel/O.D. cadmium over nickel
   Contacts - copper alloy/gold plated and alloy 52/gold plate
   Insulators - High-grade rigid dielectric/N.A. and full glass
   Interfacial seals and O-rings - silicone
7. Metric Dimensions (mm) are indicated in parentheses.

* Additional shell materials available, including titanium and Inconel®. Consult factory for ordering information.

Dimensions in Inches (millimeters) are subject to change without notice.

© 2013 Glenair, Inc.
U.S. CAGE Code 06324
Printed in U.S.A.

947-371
MIL-DTL-5015 Type Hermetic Receptacle
Jam Nut Mount Bulkhead Feed-Through

Basic Number	Shell Size		Contact Type	Alternate Key Position	Panel Thickness
947-371	Z1	32 -	6	S	N	01

Material and Finish
Z1 = CRES, Passivate
ZL = CRES, Nickel

Insert Arrangement
Per MIL-SD-1651
(See Page G-2)

Contact Type
P = Pin on Jam-Nut Side, Socket Opposite
S = Socket on Jam-Nut Side, Pin Opposite
PP = Pin to Pin
SS = Socket to Socket

Alternate Key Position
W, X, Y, or Z
(N for Normal)
(See Page G-4)

HERMETIC LEAK RATE MOD CODES	
Designator	**Required Leak Rate**
–585A	1 x 10^{-10} cc Helium per second
–585B	1 x 10^{-9} cc Helium per second
–585C	1 x 10^{-8} cc Helium per second

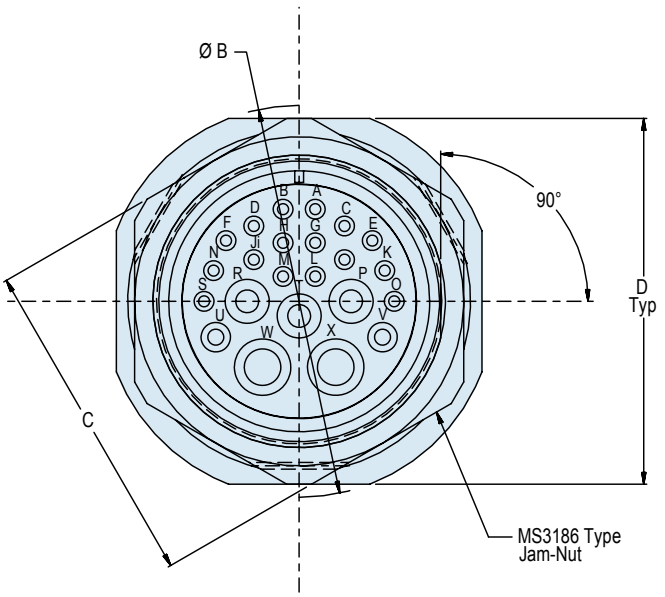

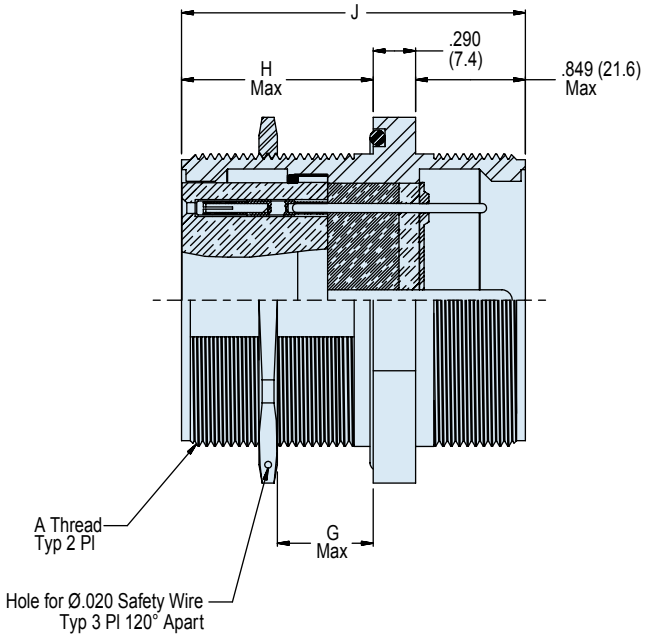

Dimensions in Inches (millimeters) are subject to change without notice.

© 2013 Glenair, Inc.

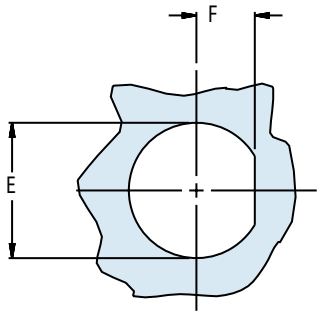

Recommended Panel Cut Out

TABLE II			
Dash No.	G	H	J
01	.125 (3.2)	1.100 (27.9)	2.230 (56.6)
02	.250 (6.4)	1.224 (31.1)	2.360 (59.9)
03	.500 (12.7)	1.474 (37.4)	2.620 (66.5)

TABLE I: CONNECTOR AND CUT-OUT DIMENSIONS

Shell Size	A Thread Class 2A	B Dia Max	C Hex	D Flats	E Dia ± .005 (0.1)	F Dim. Min.
8S	1/2-28 UNEF	1.000 (25.4)	.688 (17.5)	.875 (22.2)	.510 (13.0)	.219 (5.6)
10SL	5/8-24 UNEF	1.125 (28.6)	.812 (20.6)	1.000 (25.4)	.635 (16.1)	.281 (7.1)
12	3/4-20 UNEF	1.250 (31.8)	.938 (23.8)	1.125 (28.6)	.760 (19.3)	.344 (8.7)
12S	3/4-20 UNEF	1.250 (31.8)	.938 (23.8)	1.125 (28.6)	.760 (19.3)	.344 (8.7)
14	7/8-20 UNEF	1.375 (34.9)	1.062 (27.0)	1.250 (31.8)	.885 (22.5)	.406 (10.3)
14S	7/8-20 UNEF	1.375 (34.9)	1.062 (27.0)	1.250 (31.8)	.885 (22.5)	.406 (10.3)
16	1-20 UNEF	1.500 (38.1)	1.250 (31.8)	1.375 (34.9)	1.010 (25.7)	.469 (11.9)
16S	1-20 UNEF	1.500 (38.1)	1.250 (31.8)	1.375 (34.9)	1.010 (25.7)	.469 (11.9)
18	1 1/8-18 UNEF	1.650 (44.5)	1.375 (34.9)	1.625 (41.3)	1.135 (28.8)	.531 (13.5)
20	1 1/4-18 UNEF	1.875 (47.6)	1.500 (38.1)	1.750 (44.5)	1.260 (32.0)	.594 (15.1)
22	1 3/8-18 UNEF	2.000 (50.8)	1.625 (41.3)	1.875 (47.6)	1.385 (35.2)	.656 (16.7)
24	1 1/2-18 UNEF	2.188 (55.6)	1.750 (44.5)	2.000 (50.8)	1.510 (38.4)	.719 (18.3)
28	1 3/4-18 UNEF	2.438 (61.9)	2.000 (50.8)	2.250 (57.2)	1.760 (44.7)	.844 (21.4)
32	2-18 UNEF	2.688 (68.3)	2.250 (57.2)	2.500 (63.5)	2.010 (51.1)	.969 (24.6)
36	2 1/4-16 UN	2.938 (74.6)	2.500 (63.5)	2.750 (69.9)	2.260 (57.4)	1.089 (27.7)
40	2 1/2-16 UN	3.188 (81.0)	2.750 (69.9)	3.000 (76.2)	2.510 (63.7)	1.219 (31.0)
44	2 3/4-16 UN	3.438 (87.3)	3.000 (76.2)	3.250 (82.6)	2.760 (70.1)	1.344 (34.1)
48	3-16 UN	3.688 (93.7)	3.250 (82.6)	3.500 (88.9)	3.010 (76.5)	1.469 (37.3)

APPLICATION NOTES

1. To be identified with manufacturer's name, part number and date code, space permitting.
2. For pin/pin and socket/socket symmetrical layouts only, consult factory for available insert arrangements.
3. Power to a given contact on one end will result in power to contact directly opposite regardless of identification letter.
4. Hermeticity - Less than 1 x 10^{-7} cc/sec at one atmosphere.
5. Metric Dimensions (mm) are indicated in parentheses.
6. Electrical safety limits must be established by the user. Peak voltage, switching surge, transient voltage, etc. should be used to determine the safety application.
7. Material/Finish:

   Jam-nut, lock-ring, shell* - stainless steel/O.D. cadmium over nickel
   Contacts - copper alloy/gold plated and alloy 52/gold plate
   Insulators - High-grade rigid dielectric/N.A. and full glass
   Interfacial seals and O-rings - silicone

* Additional shell materials available, including titanium and Inconel®. Consult factory for ordering information.

Dimensions in Inches (millimeters) are subject to change without notice.

© 2013 Glenair, Inc.
U.S. CAGE Code 06324
Printed in U.S.A.

SERIES 22

GEO-MARINE®

Series III Type Hermetic Connectors



Glenair's Series 22 Geo-Marine® connectors offer high-density insert arrangements for a variety of oceanographic, geophysical and other severe environmental applications. The Mated stainless steel plug and receptacle have a hydrostatic pressure sealing capacity of up to 5000 psi (345 bar), and feature a hermetic glass seal for extremely harsh environments. Because Glenair makes all its hermetic connectors in-house, including the machining of shells, molding of interfacial seals and firing of hermetic components, we can offer you outstanding availability on stock products and fast turnaround on special orders.

Geo Marine®

Glenair, Inc.
1211 Air Way
Glendale, CA
91201-2497
818-247-6000
sales@glenair.com
www.glenair.com

Corrosion Resistant Glass Sealed Hermetic Connectors Designed for Use in Harsh Geophysical, Marine and Oil-Patch Applications

Series 22 Geo-Marine® hermetic connectors feature single-start stub-Acme threads for quick coupling of plug and receptacle, reducing thread fouling and binding as a result of dirt, grit and other foreign debris. Receptacles can be ordered in standard and scoop-proof shell styles for maximum design flexibility. Gold plated nickel-iron alloy 52 solder cup contacts, available in sizes 8, 12, 16, 20 and 22, depending on the layout chosen, offer a wide selection of insert arrangement options.

Quick Selection Guide

Part Number	Description	Page
	Series 22 Geo-Marine® Product Information	H-2
	Glenair Hermetic Connector Products Space Grade Mod Code	H-3
	Geo-Marine® Insert Arrangements	H-4
	Geo-Marine® Alternate Keyway Positions, Materials and Finishes	H-5
220-00 and 220-10	Front Mounted Jam-Nut Bulkhead Connector Receptacle	H-6
220-01 and 220-11	In-Line Connector Receptacle Assembly	H-8
220-02 and 220-12	Square Flange Mount Connector Receptacle Assembly	H-10
220-03 and 220-13	Solder Mount Bulkhead Connector Receptacle Assembly	H-12
220-04 and 220-14	Rear Mounted Jam Nut Wall Mount Connector Receptacle Assembly	H-14
220-07 and 220-17	Rear Mounted Jam Nut Box Mount Receptacle Assembly	H-16
227-092	Special Scoop-Proof Jam Nut Receptacle, Sizes -10, -12 and -14	H-18
227-039 and 227-040	Jam Nut Mount Bulkhead Feed-Through Connector	H-20

Performance Characteristics

Hydrostatic Pressure Rating	5000 psi (fully mated)	
Operating Temperature Range	-65°C to +175°C	
Durability	500 Cycles of mate/demate	
Class H Hermetic Receptacles		
Open-Face Pressure Rating	1000 to 5000 psi (Depending on Insert Arrangement)	
Hermeticity	Less than 1 X 10^{-6} sccHe/second @ 1 Atmosphere	
Current Rating	**Hermetic**	
Contact Size 22 Contact Size 20 Contact Size 16 Contact Size 12	3 amps 5 amps 10 amps 17 amps	

Service Rating	**Suggested Operational Voltage (Sea Level)**		**Test Voltage (Sea Level)**
	AC(RMS)	DC	
M	400	550	1300 VMRS
N	300	450	1000 VMRS
I	600	850	1800 VMRS
II	900	1250	2300 VMRS
Insulation Resistance	1000 Megohms minimum at 500 VDC		

© 2013 Glenair, Inc.

Glenair®

Series 22 Geo-Marine® Connector Products
Product Information

Product Features

- **Marine Grade Alloy 316 Stainless Steel machined Shells**
- **Lockmith Keying Polarization**
- **Full Line of Accessories:**
  Backshells, Protective Covers and Molding Adapters

Background

Glenair's Geo-Marine® Series 22 product offering is a ***third generation*** product development. Having started in the harsh environment and Geo-Marine applications since the early 1970's with its "G" and "GL" series, Glenair continued to develop products meeting the increasing and stringent requirements associated with these markets. In doing so, the products became a favorite with the military, especially the US Navy and manufacturers of oil patch equipment.

Applications

Designed for use in oceanographic, geophysical and other severe commercial/industrial environments, Glenair's line of Geo-Marine® Series 22 Connectors and Cables are designed to withstand hydrostatic pressures up to 5,000 PSI and exposure to extreme temperatures and corrosives.

Our Geo-Marine® products are used in numerous applications, such as US Navy towed array sonar systems, military land vehicles, submersibles and ROV's, offshore oil drilling equipment, seabed exploration, hazardous areas, pipeline inspection systems, well monitoring equipment, and digital seismic streamers.

Benefits

Utilizing Marine Grade Alloy 316 stainless steel, and insulators made from fused glass for the "H" hermetic class, Glenair offers rugged corrosion resistant Geo-Marine® connectors. The products are available as separate interconnects or may be incorporated into custom cable assemblies. Additionally, for varying applications where solvents, oils, hydraulic fluids, etc., are not compatible with the rubber materials offered as the standard, Glenair can offer alternate rubber options to meet the most severe requirements.

Receptacles

Receptacles in "H" hermetic class are available in a wide choice of shell styles and insert arrangements. These connectors are designed to mate with the proper corresponding plug, offering an ideally pressure sealed interconnect. This is achieved by the more positive "O" ring piston seal located inside the receptacle barrel-interfacing on the OD of the plug barrel with the added sealing of the plug's seals as previously noted.

The full-spectrum product line also includes ***Bulkhead Feedthrough Connectors, Connector Savers*** and a complete choice of ***Connector Accessories*** to satisfy various cable or wire bundle terminations requirements.

Metric dimensions (mm) are indicated in parentheses

© 2013 Glenair, Inc.
U.S. CAGE Code 06324
Printed in U.S.A.

Glenair Hermetic Connector Products
Space Grade Mod Codes

What is outgassing?

Plastic and rubber materials give off gaseous molecules. For example, the smell inside a new car is caused by polymer outgassing. Heat and vacuum increase the rate of diffusion. In a spacecraft the gases coming off polymers can contaminate optical surfaces and instruments. The result is degraded performance.

How is outgassing measured?

The space industry has adopted a standardized test procedure, ***ASTM E 595***, to evaluate out-gassing properties of polymers. Small samples of material are heated to 125° C. at a vacuum of 5 X 10^{-5} torr for 24 hours. Then the sample is weighed to calculate the ***Total Mass Loss*** (TML). The TML cannot exceed 1.00% of the total initial mass. During the test, outgassed matter condenses on a cooled collector plate. The quantity of outgassed matter is caluclated to determine the ***Collected Volatile Condensable Material*** (CVCM). The CVCM cannot exceed 0.10% of the original specimen mass.

What is NASA screening?

NASA specification EEE-INST-002 provides instructions on selecting, screening and qualifying parts for use on NASA GSFC space flight projects.

What screening level is required?

NASA defines three levels of screening: level 1 for highest reliability, level 2 for high reliability, and level 3 for standard reliability. Level 3 equates to standard lot acceptance inspection. Levels 1 and 2 call for additional testing.

HOW TO ORDER SPACE GRADE CONNECTORS

Step 1: Find a Standard Part Number

Electroless nickel plated shells are preferred for space flight. Cadmium plating is prohibited.

Step 2: Select a NASA Screening Level

The term "Screening Level" refers to the final inspection procedure.

Level 1 for mission-critical highest reliability
Level 2 for high reliability
Level 3 for standard reliability

Step 3: Choose Outgassing Processing

A detailed explanation of outgassing is on the following pages. The fluorosilicone rubber seals commonly used on aerospace-grade connectors such as MIL-DTL-38999 and Series 79 connectors, along with certain bonding agents and inks, do not meet NASA outgassing requirements unless the connector is specially processed. Glenair outgassing tests have shown oven baking or thermal vacuum outgassing processing are sufficient to reduce outgassing levels to NASA standards. Oven baking is more economical than thermal vacuum outgassing.

Step 4: Select the Mod 429 Code that Matches the Desired Level of Screening and Outgassing

Use the following table to choose the right modification code. Add the mod code to the connector part number. Example: 790-024PC-13ML-***429C***

NASA SCREENING LEVELS AND MODIFICATION CODES

NASA Screening Level	Special Screening Only	Special Screening Plus Outgassing Processing	
		8 Hour Oven Bake 400° F.	Thermal Vacuum Outgassing 24 hrs. 125° C.
Level 1 Highest Reliability	Mod 429B	Mod 429J	Mod 429C
Level 2 High Reliability	Mod 429	Mod 429K	Mod 429A
Level 3 Standard Reliability	(Use standard part number)	Mod 186	Mod 186M

© 2013 Glenair, Inc.

Series 22 Geo-Marine® Connectors
Insert Arrangements

Geo-Marine® Contact Arrangements

Front Face of Pin Inserts Illustrated. Service Ratings Indicated in Parentheses.

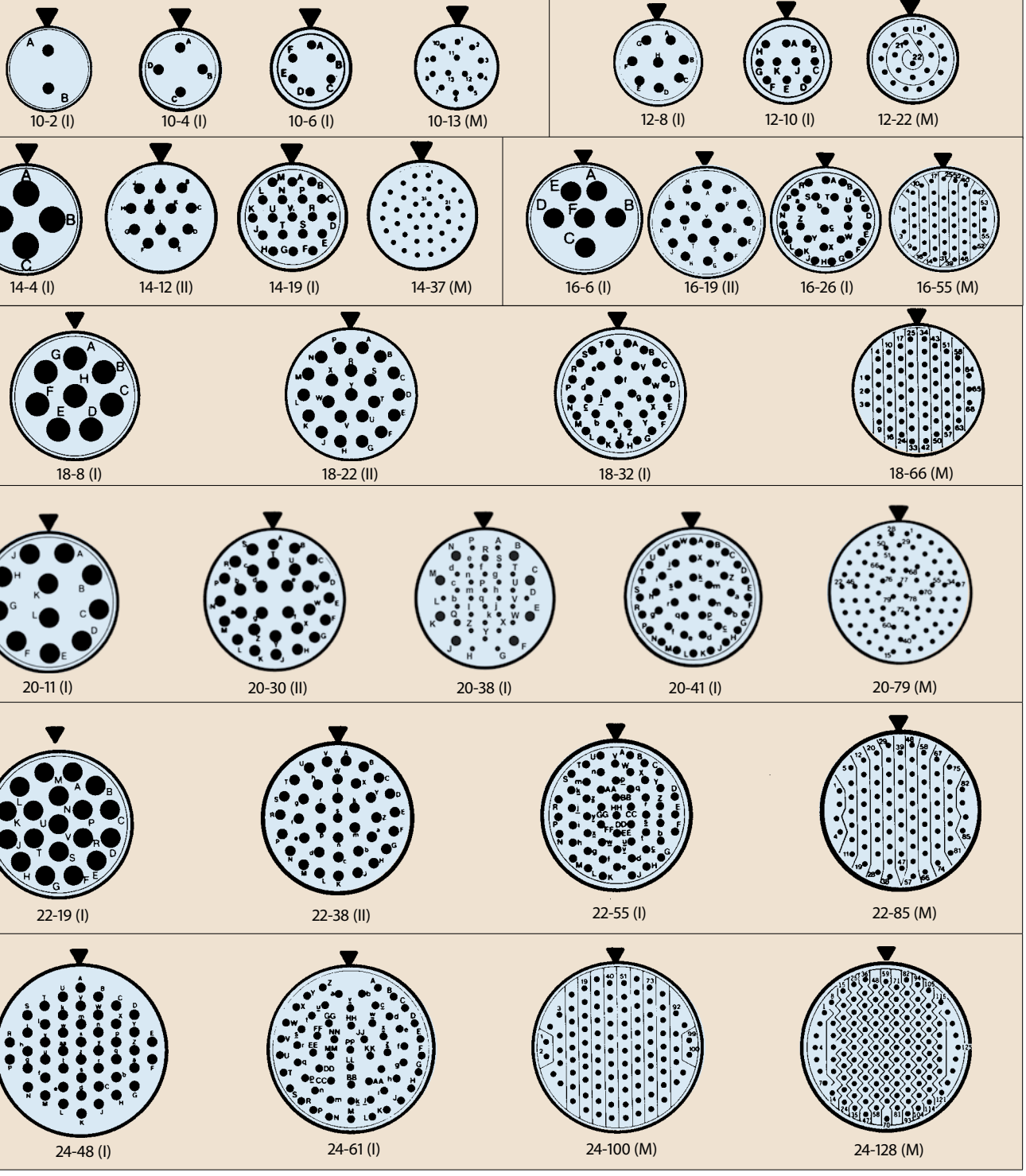

Metric dimensions (mm) are indicated in parentheses

© 2013 Glenair, Inc.
U.S. CAGE Code 06324
Printed in U.S.A.

Series 22 Geo-Marine® Connectors
Alternate Keyway Positions

Contact Arrangements

SHELL SIZE	SERIES 22 PATTERN	SERVICE RATING	CONTACT SIZE/QUANTITY			
			22	20	16	12
10	10-2	II			2	
	10-04	I		4		
	10-06	I		6		
	10-13	M	13			
12	12-08	II			8	
	12-10	I		10		
	12-22	M	22			
14	14-04	II				4
	14-12	II			14	
	14-19	I		19		
	14-37	M	37			
16	16-06	II				6
	16-19	II			19	
	16-26	I		26		
	16-55	M	55			
18	18-08	I		8		
	18-22	II			22	
	18-32	I		32		
	18-66	M	66			
20	20-11	II				11
	20-30	II			30	
	20-38	I		30	8	
	20-41	I		41		
	20-79	M	79			
22	22-19	II				19
	22-38	II			38	
	22-55	I		55		
	22-85	M	85			
24	24-48	II			48	
	24-61	I		61		
	24-100	M	100			
	24-128	M	128			

Alternate Keyway Positions

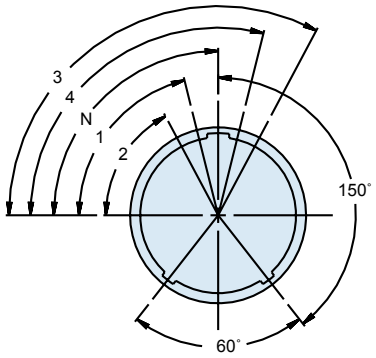

FACE VIEW
RECEPTACLE

SHELL SIZE DESIG.	N°	1°	2°	3°	4°
10	90	76	62	118	104
12	90	70	58	122	110
14	90	69	56	124	111
16	90	72	60	120	108
18	90	72	62	120	108
20	90	72	60	120	108
22	90	75	64	116	105
24	90	75	64	115	105

Depth/Pressure Conversion

Feet	Meters	P.S.I.	Bar
1	.3	.4	.0296
10	3.1	4.3	.2965
50	15.2	21.7	1.4962
100	30.5	43.3	2.9854
250	76.2	108.3	7.4670
500	152.4	216.5	24.9271
1,000	304.8	433.0	29.8543
1,500	457.2	649.5	44.7814
2,500	762.0	1082.5	74.6357
5,000	1524.0	2165.0	149.2715
10,000	3048.0	4330.0	298.5430
11,547	3519.35	5000.0	344.7379

Custom Contact Arrangements

Series 22 inserts may be tooled for alternative contact insert arrangements including variably sized electrical contacts—from size 12 to 22—as well as hybrid arrangements incorporating fiber optic, Co-ax and other contact types. Glenair has produced hundreds of custom arrangements beyond those shown in this catalog. Please contact your local Glenair representative, or the factory, for assistance.

Materials / Finishes

ITEM	MATERIAL	FINISH
Connector Shells	CRS Alloy 316 SAE-AMS-QQ-S-763	Passivate-ASTM A967
Solder Mount Bulkhead Receptacle	CRS 316 SAE-AMS-QQ-S-763	Nickel SAE-AMS-QQ-N-290, Class 2
Insulators, Class "H"	Fused Vitreous Glass	None
Contacts, Pin Class"H"	Nickel-Iron Alloy 52 - MIL-I-23011, Class 2	Gold/Ni AMS
Contacts, Socket	Baryllium Copper	Gold
Contacts, Socket Hood	CRS QQ-S-763, AISI 305	Passivate-ASTM A967
"O"-Rings	Nitrile (Buna-N) Rubber MIL-G-21569	None
Interfacial & Peripherial Seals	Flourosilicone Rubber MIL-R-25988	None

Additional materials are available, including titanium and Inconel®. Consult factory for ordering information.

Cable/Wire D.C. Resistance

Copper Conductors at Room Temperature	
AWG	Ohms per 1000 feet
28	66.2 Max
26	41.6 Max
24	26.2 Max
22	16.5 Max
20	10.4 Max
18	6.5 Max
16	4.1 Max
14	2.6 Max
12	1.6 Max

Metric dimensions (mm) are indicated in parentheses

© 2013 Glenair, Inc.
U.S. CAGE Code 06324
Printed in U.S.A.

220-00 and 220-10
Front Mounted Bulkhead Receptacle Connector



How To Order

Series No.	Class	Insert Arrangement	Polarization
	H = Hermetic		*(N, 1, 2, 3, 4)*
220 - 00	H	24 - 61	P	N
Shell Style *00 = Standard* *10 = Scoop Proof*		**Shell Size**	*P = Pins* *S = Sockets*	

H

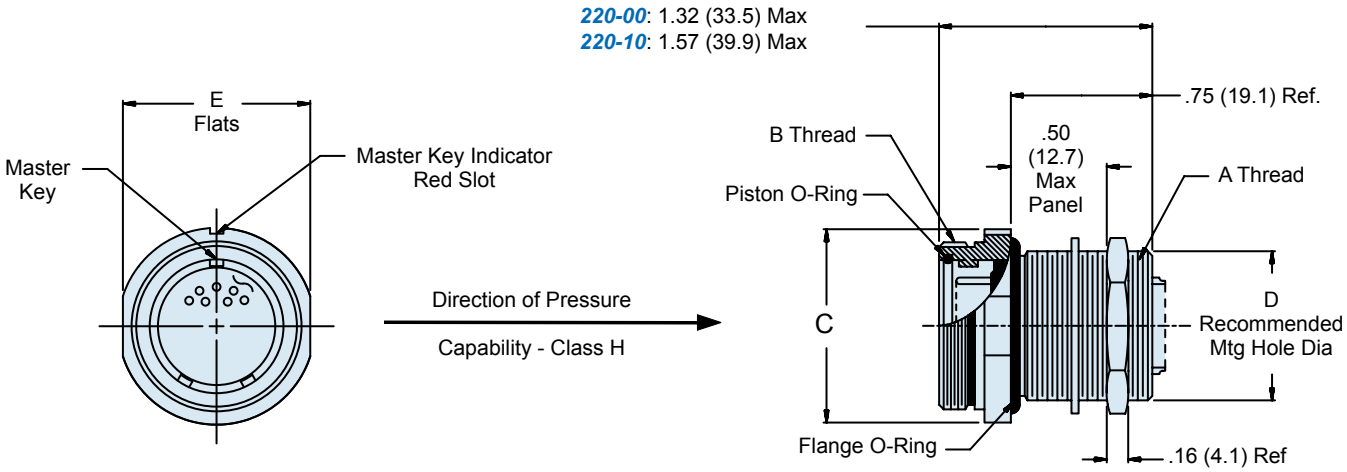

APPLICATION NOTES

1. Prior to use, lubricate O-rings with high grade silicone lubricant (Moly-kote M55 or equivalent).
2. Hermeticity rating: less than $1x10^{-6}$ cc helium per second.
3. Open face pressure rating: 1000 to 5000 psi

Metric dimensions (mm) are indicated in parentheses

© 2013 Glenair, Inc.

Dimensions							
Shell Size	A Thread Class 2A	B Thread Class 2A	Ø C Max		D		E Flats
					±.005	±(0.1)	
10	5/8 - 24 UNEF	.750 - .1P - .1L	1.03	(26.2)	.635	(16.1)	.875 (22.2)
12	3/4 - 20 UNEF	.875 - .1P - .1L	1.16	(29.5)	.760	(19.3)	1.000 (25.4)
14	7/8 - 20 UNEF	1.000 - .1P - .1L	1.28	(32.5)	.885	(22.5)	1.125 (28.6)
16	1 - 20 UNEF	1.125 - .1P - .1L	1.41	(35.8)	1.010	(25.7)	1.250 (31.8)
18	1 1/18 - 16 UN	1.250 - .1P - .1L	1.66	(42.2)	1.135	(28.8)	1.500 (38.1)
20	1 1/4 - 16 UN	1.375 - .1P - .1L	1.78	(45.2)	1.260	(32.0)	1.625 (41.3)
22	1 3/8 - 16 UN	1.500 - .1P - .1L	1.91	(48.5)	1.385	(35.2)	1.750 (44.5)
24	1 1/2 - 16 UN	1.625 - .1P - .1L	2.03	(51.6)	1.510	(38.4)	1.875 (47.6)

Recommended Jam Nut Installation Torque Values		
Shell Size	Torque ± 5%	
	Inch - Lbs.	Newton - Meters
10	95	10.73
12	110	12.43
14	140	15.82
16	170	19.21
18	195	22.03
20	215	24.29
22	235	26.55
24	260	29.38

Replacement O-Ring Part Numbers*		
Shell Size	Piston O-Ring	Flange O-Ring
10	2-014	2-017
12	2-016	2-019
14	2-018	2-021
16	2-020	2-023
18	2-022	2-025
20	2-024	2-027
22	2-026	2-029
24	2-028	2-030
*Parker O-Ring Part Numbers. Compound N674-70 Or Equivalent		

Metric dimensions (mm) are indicated in parentheses

© 2013 Glenair, Inc.
U.S. CAGE Code 06324
Printed in U.S.A.

220-01 and 220-11
In-Line Connector Receptacle

How To Order



Series No.	Class	Insert Arrangement	Polarization
220 - 01	H	24 - 61	P N

- **Shell Style**: *01* = Standard; *11* = Scoop Proof
- **Shell Size**
- **Insert Arrangement**: *P* = Pins; *S* = Sockets

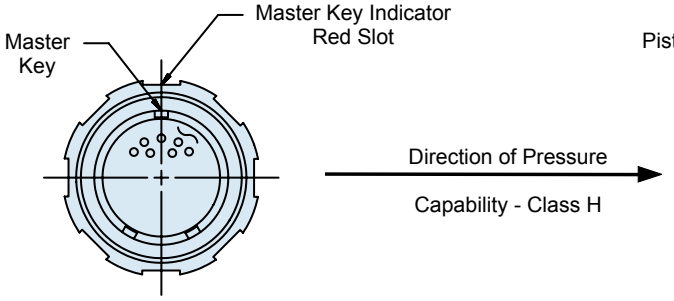

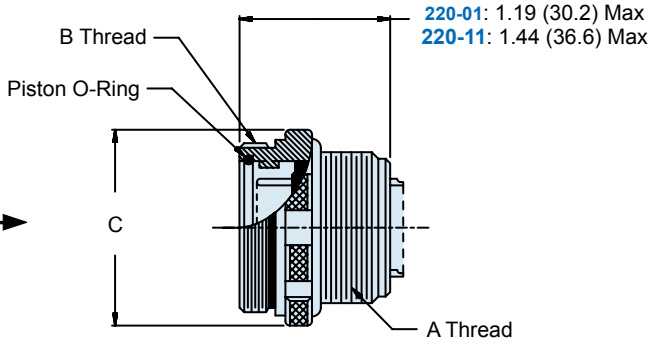

APPLICATION NOTES

1. Prior to use, lubricate O-rings with high grade silicone lubricant (Moly-kote M55 or equivalent).
2. Hermeticity rating: less than $1x10^{-6}$ cc helium per second.
3. Open face pressure rating: 1000 to 5000 psi

Metric dimensions (mm) are indicated in parentheses

© 2013 Glenair, Inc.

Dimensions			
Shell Size	A Thread Class 2A	B Thread Class 2A	Ø C Max
10	5/8 - 24 UNEF	.750 - .1P - .1L	.906 (23.0)
12	3/4 - 20 UNEF	.875 - .1P - .1L	1.031 (26.2)
14	7/8 - 20 UNEF	1.000 - .1P - .1L	1.156 (29.4)
16	1 - 20 UNEF	1.125 - .1P - .1L	1.281 (32.5)
18	1 1/18 - 16 UN	1.250 - .1P - .1L	1.531 (38.9)
20	1 1/4 - 16 UN	1.375 - .1P - .1L	1.656 (42.1)
22	1 3/8 - 16 UN	1.500 - .1P - .1L	1.781 (45.2)
24	1 1/2 - 16 UN	1.625 - .1P - .1L	1.906 (48.4)

Replacement O-Ring Part Numbers*	
Shell Size	Piston O-Ring
10	2-014
12	2-016
14	2-018
16	2-023
18	2-022
20	2-024
22	2-026
24	2-028
*Parker O-Ring Part Numbers. Compound N674-70 Or Equivalent	

Metric dimensions (mm) are indicated in parentheses

© 2013 Glenair, Inc.

220-02 and 220-12
Square Flange Mount Receptacle



How To Order

Series No.	Class	Insert Arrangement	Polarization
	H = Hermetic		*(N, 1, 2, 3, 4)*
220 - 02	H	24 - 61	P	N
Shell Style *02 = Standard* *12 = Scoop Proof*		**Shell Size**	*P = Pins* *S = Sockets*	

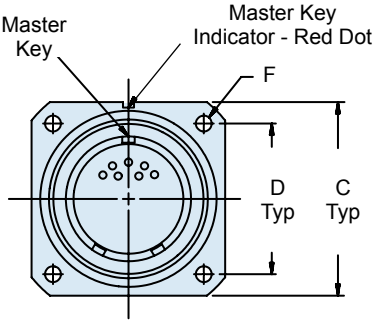

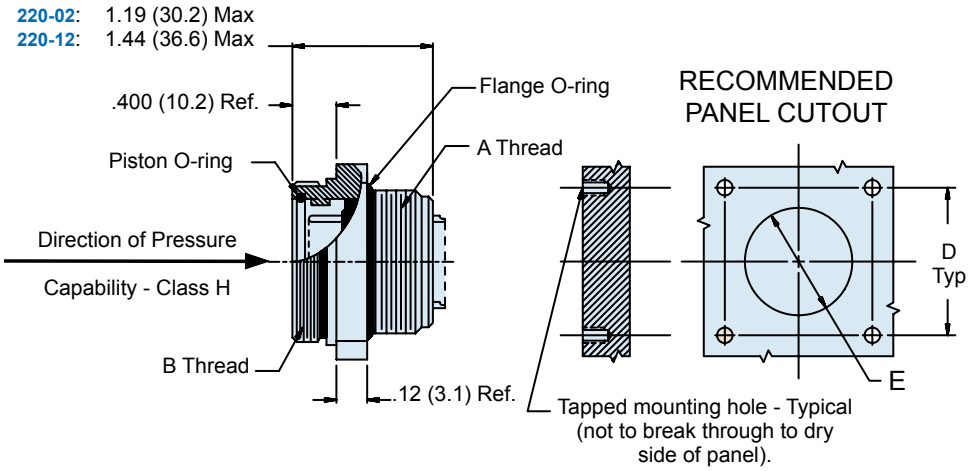

APPLICATION NOTES

1. Prior to use, lubricate O-rings with high grade silicone lubricant (Moly-kote M55 or equivalent).
2. Hermeticity rating: less than $1x10^{-6}$ cc helium per second.
3. Open face pressure rating: 1000 to 5000 psi

Metric dimensions (mm) are indicated in parentheses

© 2013 Glenair, Inc.

Dimensions					
SHELLSIZE	A THREAD CLASS 2A	B THREAD CLASS 2A	C DIM	D DIM	E DIA + .015 + (0.4) - .000 - (0.0)
10	5/8 - 24 UNEF	.750 - .1P - .1L	1.188 (30.2)	.938 (23.8)	.844 (21.4)
12	3/4 - 20 UNEF	.875 - .1P - .1L	1.312 (33.3)	1.062 (27.0)	.969 (24.6)
14	7/8 - 20 UNEF	1.000 - .1P - .1L	1.438 (36.5)	1.188 (30.2)	1.078 (27.4)
16	1 - 20 UNEF	1.125 - .1P - .1L	1.562 (39.7)	1.250 (31.8)	1.219 (31.0)
18	1 1/8 - 16 UN	1.250 - .1P - .1L	1.750 (44.5)	1.375 (34.9)	1.359 (34.5)
20	1 1/4 - 16 UN	1.375 - .1P - .1L	1.875 (47.6)	1.500 (38.1)	1.515 (38.5)
22	1 3/8 - 16 UN	1.500 - .1P - .1L	2.000 (50.8)	1.625 (41.3)	1.640 (41.7)
24	1 1/2 - 6 UN	1.625 - .1P - .1L	2.125 (54.0)	1.750 (44.5)	1.765 (44.8)

Mounting/Hardware Information		
SHELL SIZE	F DIA	MTG SCREW REF.
10	.125 (3.2)	No. 4
12	.125 (3.2)	No. 4
14	.125 (3.2)	No. 4
16	.125 (3.2)	No. 4
18	.125 (3.2)	No. 4
20	.125 (3.2)	No. 4
22	.125 (3.2)	No. 4
24	.156 (4.0)	No. 6

Replacement O-Ring Part Numbers		
SHELL SIZE	PISTON O-RING	FLANGE O-RING
10	2-014	2-021
12	2-016	2-023
14	2-018	2-025
16	2-020	2-027
18	2-022	2-029
20	2-024	2-030
22	2-026	2-031
24	2-028	2-032
*Parker o-ring part numbers. Compound N674-70 or equivalent.		

Metric dimensions (mm) are indicated in parentheses

© 2013 Glenair, Inc.

220-03 and 220-13
Solder Mount Bulkhead Receptacle



How To Order

Series No.	Class		Insert Arrangement		Polarization	
220	- 03	H	24	- 61	P	N

- **Shell Style**: *03 = Standard*, *13 = Scoop Proof*
- **Shell Size**
- **Polarization**: *P = Pins*, *S = Sockets*

H

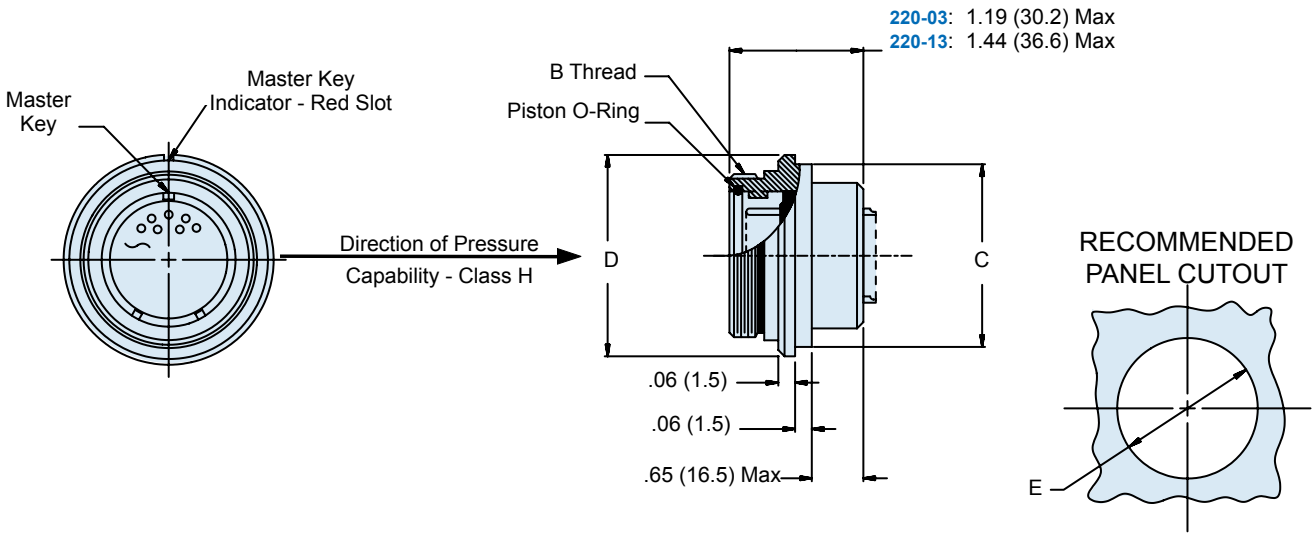

APPLICATION NOTES

1. Prior to use, lubricate O-rings with high grade silicone lubricant (Moly-kote M55 or equivalent).
2. Hermeticity rating: less than $1x10^{-6}$ cc helium per second.

Metric dimensions (mm) are indicated in parentheses

© 2013 Glenair, Inc.

Dimensions				
SHELL SIZE	B THREAD CLASS 2A	C DIA MAX	D DIA	E DIA +.010+(0.3) -.000 -(0.0)
10	.750 - .1P - .1L	.870 (22.1)	1.00 (25.4)	.875 (22.2)
12	.875 - .1P - .1L	.995 (25.3)	1.13 (28.7)	1.000 (25.4)
14	1.000 - .1P - .1L	1.120 (28.4)	1.25 (31.8)	1.125 (28.6)
16	1.125 - .1P - .1L	1.245 (31.6)	1.38 (35.1)	1.250 (31.8)
18	1.250 - .1P - .1L	1.370 (34.8)	1.50 (38.1)	1.375 (34.9)
20	1.375 - .1P - .1L	1.495 (38.0)	1.63 (41.4)	1.500 (38.1)
22	1.500 - .1P - .1L	1.620 (41.1)	1.75 (44.5)	1.625 (41.3)
24	1.625 - .1P - .1L	1.745 (44.3)	1.88 (47.8)	1.750 (44.5)

Replacement O-Ring Part Numbers *	
SHELL SIZE	PISTON O-RING
10	2-014
12	2-016
14	2-018
16	2-020
18	2-022
20	2-024
22	2-026
24	2-028
* Parker O-ring part numbers. Compound N674-70 or equivalent.	

Metric dimensions (mm) are indicated in parentheses

© 2013 Glenair, Inc.

220-04 and 220-14
Rear Wall Mount Jam Nut Receptacle

How To Order



Series No.	Class	Insert Arrangement	Polarization
	H = Hermetic		*(N, 1, 2, 3, 4)*

220	-	04	H	24	-	61	P	N

- **Shell Style**: *04 = Standard*, *14 = Scoop Proof*
- **Shell Size**
- *P = Pins*, *S = Sockets*

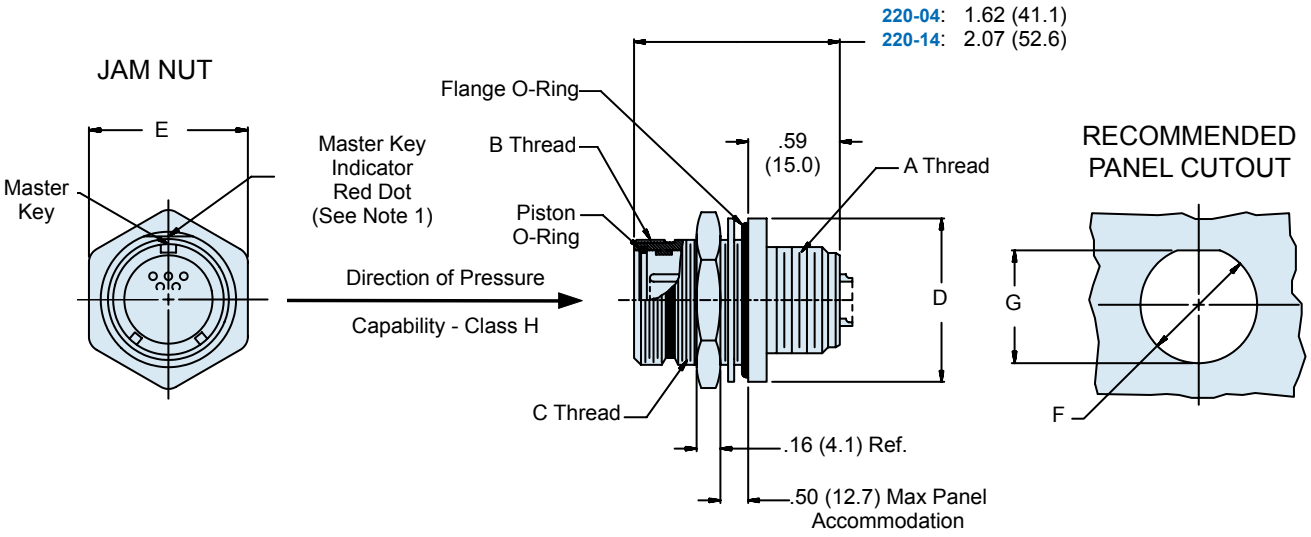

APPLICATION NOTES

1. Flat and master key indicator rotates with master key per position noted on Page A-4.
2. Hermeticity rating: less than $1x10^{-6}$ cc helium per second.
3. Open face pressure rating: 1000 to 5000 psi

Metric dimensions (mm) are indicated in parentheses

© 2013 Glenair, Inc.

220-04 and 220-14
Rear Wall Mount Jam Nut Receptacle

Dimensions							
SHELL SIZE	A THREAD CLASS 2A	B THREAD CLASS 2A	C THREAD CLASS 2A	D DIA	E FLATS	F DIA ±.005±(0.1)	G ±.005±(0.1)
10	5/8 - 24 UNEF	.750 - .1P - .1L	7/8 - 20 UNEF	1.25 (31.8)	1.125 (28.6)	.885 (22.5)	.835 (21.2)
12	3/4 - 20 UNEF	.875 - .1P - .1L	1 - 20 UNEF	1.38 (35.1)	1.250 (31.8)	1.010 (25.7)	.960 (24.4)
14	7/8 - 20 UNEF	1.000 - .1P - .1L	1 1/8 - 16 UN	1.50 (38.1)	1.500 (38.1)	1.135 (28.8)	1.085 (27.6)
16	1 - 20 UNEF	1.125 - .1P - .1L	1 1/4 - 16 UN	1.63 (41.4)	1.625 (41.3)	1.260 (32.0)	1.210 (30.7)
18	1 1/8 - 16 UN	1.250 - .1P - .1L	1 3/8 - 16 UN	1.75 (44.5)	1.750 (44.5)	1.385 (35.2)	1.335 (33.9)
20	1 1/4 - 16 U N	1.375 - .1P - .1L	1 1/2 - 16 UN	1.88 (47.8)	1.875 (47.6)	1.510 (38.4)	1.460 (37.1)
22	1 3/8 - 16 UN	1.500 - .1P - .1L	1 5/8 - 16 UN	2.00 (50.8)	2.000 (50.8)	1.635 (41.5)	1.585 (40.3)
24	1 1/2 - 16 UN	1.625 - .1P - .1L	1 3/4 - 16 UN	2.12 (53.8)	2.125 (54.0)	1.760 (44.7)	1.710 (43.4)

Recommended Jam Nut Installation Torque Values		
SHELL SIZE	TORQUE ± 5%	
	INCH-POUNDS	NEWTON-METERS
10	95	10.73
12	110	12.43
14	140	15.82
16	170	19.21
18	195	22.03
20	215	24.29
22	235	26.55
24	260	29.38

Replacement O-Ring Part Numbers *		
SHELL SIZE	PISTON O-RING	FLANGE O-RING
10	2-014	2-021
12	2-016	2-023
14	2-018	2-025
16	2-020	2-027
18	2-022	2-029
20	2-024	2-030
22	2-026	2-031
24	2-028	2-032
* Parker O-ring part numbers. Compound N674-70 or equivalent.		

Metric dimensions (mm) are indicated in parentheses

© 2013 Glenair, Inc.

220-07 and 220-17
Rear Mounted Jam Nut Box Mount Receptacle



How To Order

Series No.	Class	Insert Arrangement	Polarization
220 - 07	H	24 - 61	P N

- **Shell Style**: *07* = Standard; *17* = Scoop Proof
- **Shell Size**
- **Polarization**: *P* = Pins; *S* = Sockets

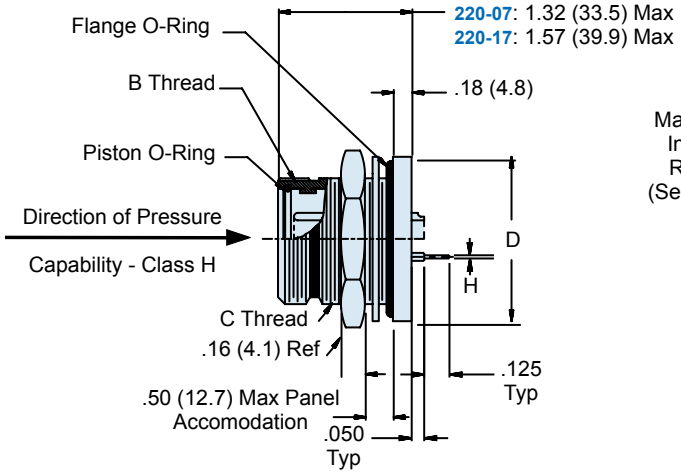

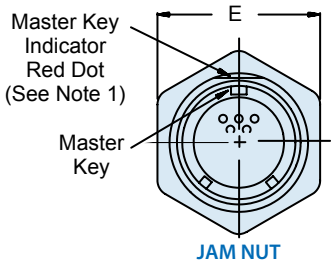

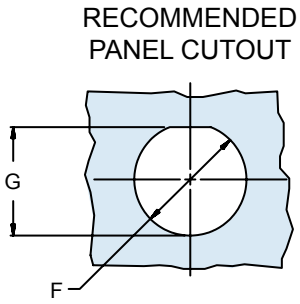

Prior to use, lubricate O-Rings with high grade silicone lubricant (Moly-Kote M55 or equivalent).

APPLICATION NOTES

1. Flat and Master Key Indicator rotates with Master Key, per Key position noted on Page A-4
2. Hermeticity rating: less than 1x10-6 cc helium per second.
3. Open face pressure rating: 1000 to 5000 psi.

Metric dimensions (mm) are indicated in parentheses

© 2013 Glenair, Inc.

220-07 and 220-17
Rear Mounted Jam Nut Box Mount Receptacle

Dimensions								
SHELL SIZE	B THREAD CLASS 2A	C THREAD CLASS 2A	D DIA	E FLATS	F DIA ±.005± (0.1)	G ±.005± (0.1)	CONTACT SIZE	H DIA
10	.750 - .1P - .1L	7/8 - 20 UNEF	1.25 (31.8)	1.125 (28.6)	.885 (22.5)	.835 (21.2)	12	.095/.093 (2.413/2.362)
12	.875 - .1P - .1L	1 - 20 UNEF	1.38 (35.1)	1.250 (31.8)	1.010 (25.7)	.960 (24.4)		
14	1.000 - .1P - .1L	1 1/8 - 16 UN	1.50 (38.1)	1.500 (38.1)	1.135 (28.8)	1.085 (27.6)	16	.0635/.061 (1.613/1.549)
16	1.125 - .1P - .1L	1 1/4 - 16 UN	1.63 (41.4)	1.625 (41.3)	1.260 (32.0)	1.210 (30.7)		
18	1.250 - .1P - .1L	1 3/8 - 16 UN	1.75 (44.5)	1.750 (44.5)	1.385 (35.2)	1.335 (33.9)	20	.028/.024 (0.711/0.610)
20	1.375 - .1P - .1L	1 1/2 - 16 UN	1.88 (47.8)	1.875 (47.6)	1.510 (38.4)	1.460 (37.1)		
22	1.500 - .1P - .1L	1 5/8 - 16 UN	2.00 (50.8)	2.000 (50.8)	1.635 (41.5)	1.585 (40.3)	22	.021/.018 (0.533/0.457)
24	1.625 - .1P - .1L	1 3/4 - 16 UN	2.12 (53.8)	2.125 (54.0)	1.760 (44.7)	1.710 (43.4)		

Metric dimensions (mm) are indicated in parentheses.

Recommended Jam Nut Installation Torque Values		
SHELLSIZE	TORQUE ± 5%	
	INCH-POUNDS	NEWTON-METERS
10	95	10.73
12	110	12.43
14	140	15.82
16	170	19.21
18	195	22.03
20	215	24.29
22	235	26.55
24	260	29.38

Replacement O-Ring Part Numbers *		
SHELL SIZE	PISTON O-RING	FLANGE O-RING
10	2-014	2-021
12	2-016	2-023
14	2-018	2-025
16	2-020	2-027
18	2-022	2-029
20	2-024	2-030
22	2-026	2-031
24	2-028	2-032
* Parker O-ring part numbers. Compound N674-70 or equivalent.		

Metric dimensions (mm) are indicated in parentheses

© 2013 Glenair, Inc.

227-092
Special Scoop-Proof Jam Nut Receptacle
Shell Sizes -10, -12 and -14



How To Order

Series No.	Shell Size		Insert Arrangement	Polarization (N, 1, 2, 3, 4)
227-092	14	- 37	P	N

P = Pins
S = Sockets

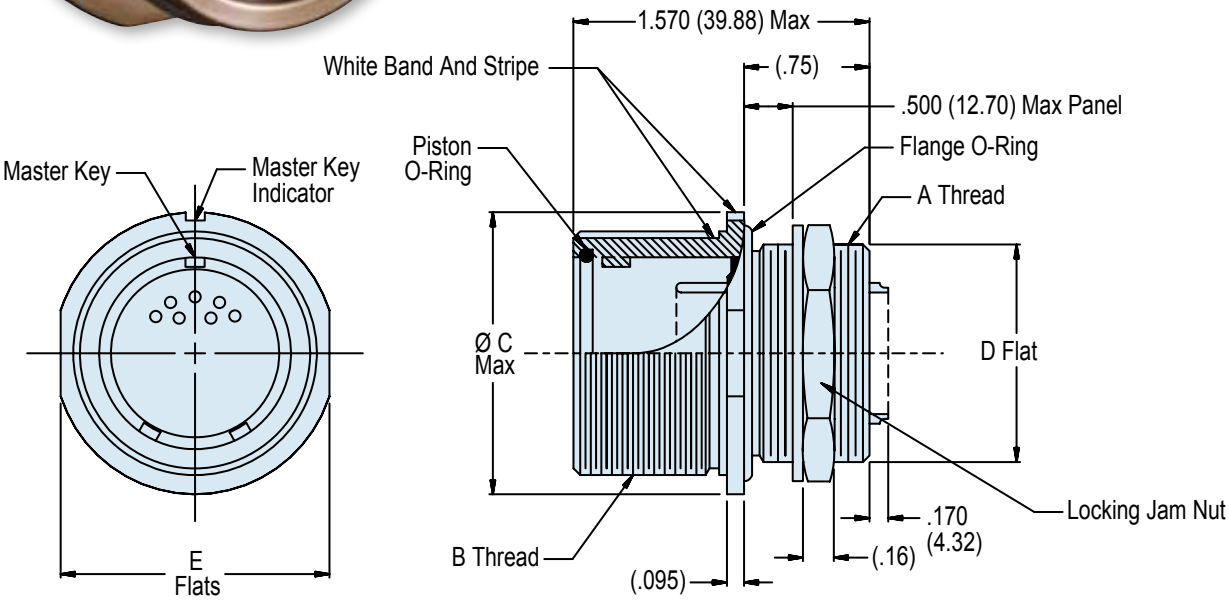

Prior to use, lubricate O-Rings with high grade silicone lubricant (Moly-Kote M55 or equivalent).

APPLICATION NOTES

1. Current rating: Size 22 contact - 500 VDC, 3 Amps.
2. Hydrostatic pressure rating: 5000 PSI, fully mated.
3. Insulation resistance: 1000 MegOhms min at 500 VDC.

Metric dimensions (mm) are indicated in parentheses

© 2013 Glenair, Inc.
U.S. CAGE Code 06324
Printed in U.S.A.

Dimensions							
SHELL SIZE	A THREAD CLASS 2A	B THREAD CLASS 2A	C DIA	D FLAT	E FLATS	F +.005 -(0.1)	G +.005 -(0.1)
-10	5/8-24 UNEF	.750 -.1P -.1L	1.030 (26.16)	.594 (15.09)	.875 (22.23)	.606 (15.39)	.645 (16.38)
-12	3/4-20 UNEF	.875 -.1P -.1L	1.160 (29.46)	.709 (18.01)	1.000 (25.40)	.721 (18.31)	.770 (19.56)
-14	7/8-20 UNEF	1.000 -.1P -.1L	1.280 (32.51)	.834 (21.18)	1.125 (28.58)	.846 (21.49)	.895 (22.73)

Metric dimensions (mm) are indicated in parentheses.

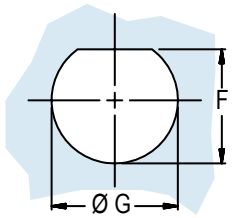

Recommended
Panel Cut-out

Metric dimensions (mm) are indicated in parentheses

© 2013 Glenair, Inc.

227-039 and 227-040
Jam Nut Mount Bulkhead Feed-Through Connector
Environmental or Hermetic

Bulkhead feed-through for high pressure applications

How To Order

Basic Part Number	Contact Arrangement Dash No.	Side A Alternate Insert Position	Side B Alternate Insert Position
227-039 - Standard Shell (mates with 220-06 plug) *227-040 = Scoop Proof Shell (mates with 220-16 plug)*	*(See Page H-4) (Note: For Pin/Pin or Socket/Socket, the Insert Arrangement Must Be Symmetrical.)*	*- N, 1, 2, 3, or 4 (See Page H-5)*	*- N, 1, 2, 3, or 4 (See Page H-5)*

227-039	-	10	-	2	P	N	P	N	03	D
Shell Size		Side A Configuration: *P = Pin, S = Socket, H = Hermetic Pin*			Side B Configuration: *P = Pin, S = Socket, H = Hermetic Pin*				Bulkhead Thickness Dash No. *(Table II)*	Double O-Ring Option *(Omit For None)*



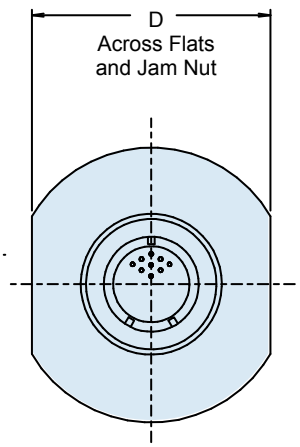

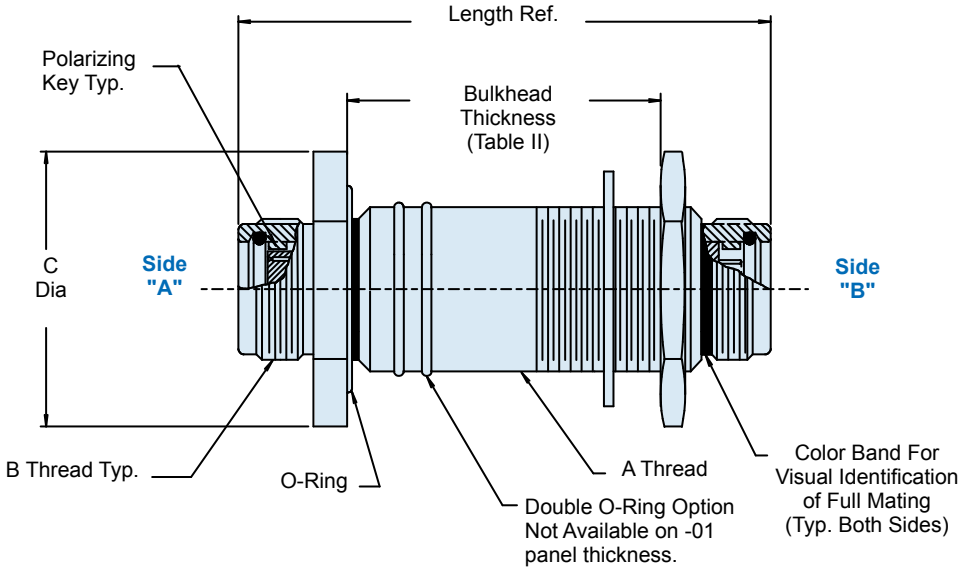

Metric dimensions (mm) are indicated in parentheses

© 2013 Glenair, Inc.
U.S. CAGE Code 06324
Printed in U.S.A.

227-039 and 227-040
Jam Nut Mount Bulkhead Feed-Through Connector
Environmental or Hermetic

Glenair®

Table I

Shell Size	A Thread Class 2A	B Thread Class 2A	C Dia	D Flat	E Dia *
10	7/8-20 UNEF	.750-.1P-.1L	1.41 (35.8)	1.250 (31.8)	.875 (22.2)
12	1-20 UNEF	.875-.1P-.1L	1.53 (38.9)	1.375 (34.9)	1.000 (25.4)
14	1 1/8-18 UNEF	1.000-.1P-.1L	1.66 (42.2)	1.500 (38.1)	1.125 (28.6)
16	1 1/4-16 UN	1.125-.1P-.1L	1.78 (45.2)	1.625 (41.3)	1.250 (31.8)
18	1 3/8-16 UN	1.250-.1P-.1L	1.91 (48.5)	1.750 (44.5)	1.375 (34.9)
20	1 1/2-16 UN	1.375-.1P-.1L	2.03 (51.6)	1.875 (47.6)	1.500 (38.1)
22	1 5/8-16 UN	1.500-.1P-.1L	2.16 (54.9)	2.000 (50.8)	1.625 (41.3)
24	1 3/4-16 UN	1.625-.1P-.1L	2.28 (57.9)	2.125 (54.0)	1.750 (44.5)

* Standard Shell +.010 (.3) -.000 (.0)
* Double "O" Ring Option +.002 (.3) -.000 (.0)

Table II

Dash No.	Panel Min	Panel Max	Length (Ref.)	
			Standard Shell Length	Scoop Proof Shell Length
01	.03 (.8)	1.00 (25.4)	2.30 (58.4)	3.00 (76.2)
02	1.00 (25.4)	2.00 (50.8)	3.30 (83.8)	4.00 (101.6)
03	2.00 (50.8)	3.00 (76.2)	4.30 (109.2)	5.00 (127.0)
04	3.00 (76.2)	4.00 (101.6)	5.30 (134.6)	6.00 (152.4)
05	4.00 (101.6)	5.00 (127.0)	6.30 (160.0)	7.00 (177.8)
06	5.00 (127.0)	6.00 (152.4)	7.30 (185.4)	8.00 (203.2)
07	6.00 (152.4)	7.00 (177.8)	8.30 (210.8)	9.00 (228.6)
08	7.00 (177.8)	8.00 (203.2)	9.30 (236.2)	10.00 (254.0)

Notes

1. Open face pressure rating: 1000 to 5000 psi, hermetic side
2. Power to a given contact on one end will result in power to the contact directly opposite, regardless of contact I.D.

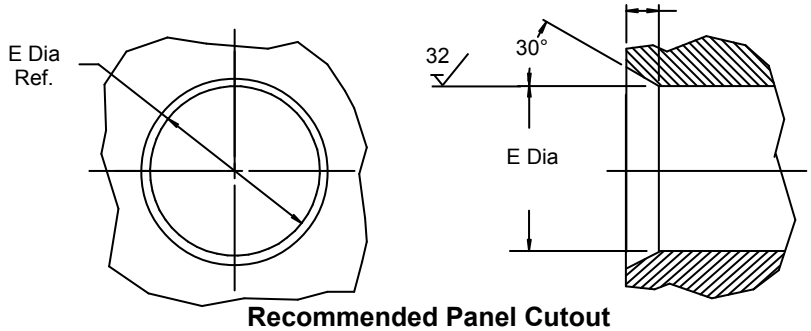

Recommended Panel Cutout

Metric dimensions (mm) are indicated in parentheses

© 2013 Glenair, Inc.

SERIES 28
HIPER-D

MIL-DTL-24308/9

QPL and Glenair Commercial D-Subminiature Hermetic Connectors

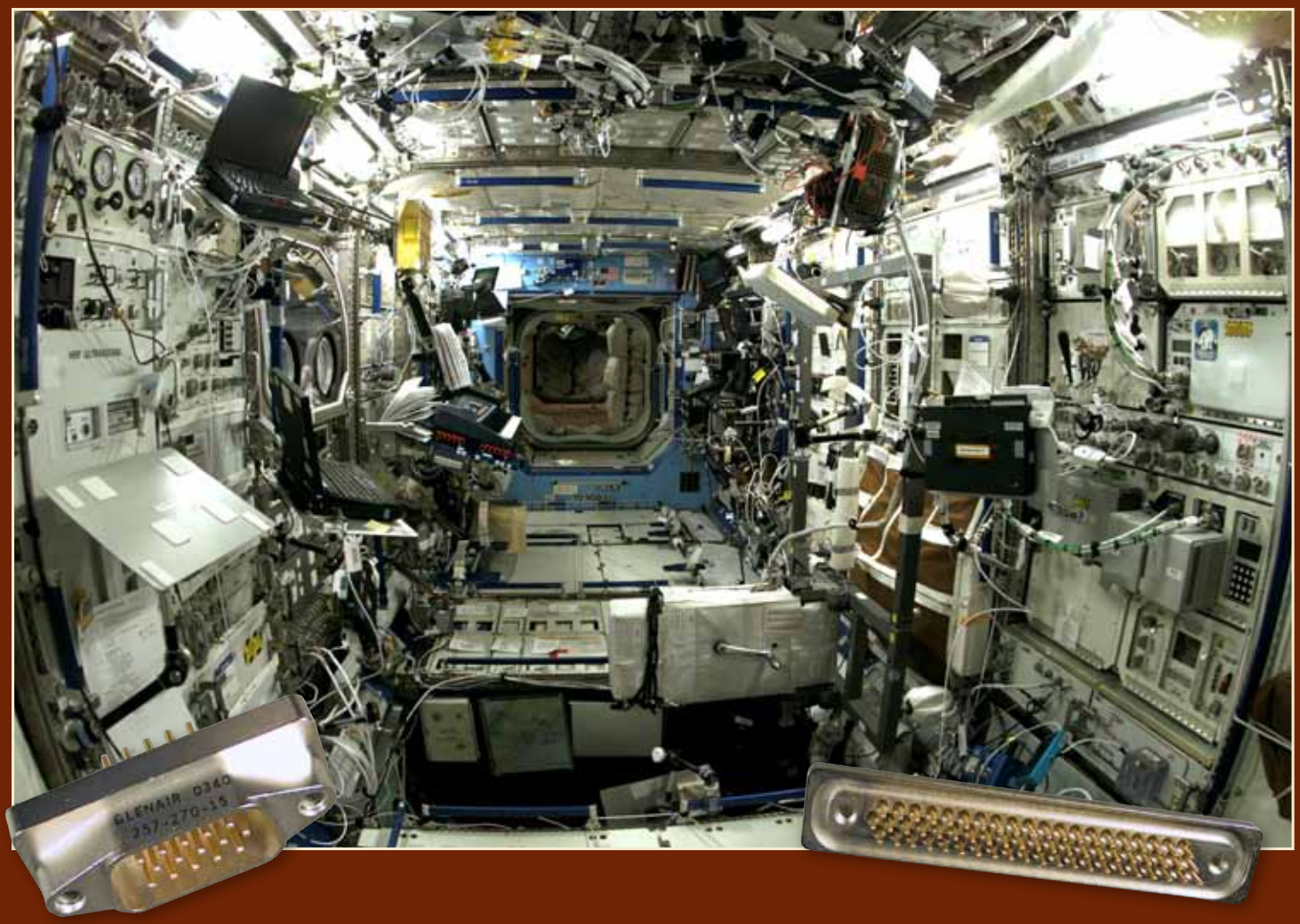

Glenair MIL-DTL-24308 D-Subminiature hermetic connectors are high density, compact connectors suited for use in rack and panel, cable to panel and cable to cable applications where an airtight seal is required. Front- and rear-mount shell styles are available with both solder cup and eyelet contacts in six shell sizes for maximum design flexibility. Because Glenair makes all its hermetic connectors in-house, including the machining of shells, molding of interfacial seals and firing of hermetic components, we can offer you outstanding availability on stock products and fast turnaround on special orders.

HiPer D MIL 24308™

Glenair®

Glenair, Inc.
1211 Air Way
Glendale, CA
91201-2497
818-247-6000
sales@glenair.com
www.glenair.com

MIL-DTL-24308/9 and Glenair Commercial Hermetic D-Subminiature Connectors

D-Subminiature hermetic connectors are offered with passivated stainless steel, fused tin and nickel plated shells, with glass insulators fused to the connector shell. Ferrous alloy gold-plated contacts, available in sizes #20 and #22 contacts—on standard and high-density arrangements, respectively—meet a leak rate of 1 X 10^{-7} cc/Helium per second. Choose from 11 different insert arrangements with 9 to 104 circuits, in accordance with MIL-DTL-24308/9H and Glenair commercial series. Connectors with panel sealing are available with nitrile, fluorosilicone and silicone O-rings.

Quick Selection Guide

Part Number	Description	Page
	MIL-DTL-24308 Type Hermetic Connector Solder Mount Information	J-2
	Glenair Hermetic Connector Products Special Leak Rate Mod Codes	J-3
	Glenair Hermetic Connector Products Space Grade Mod Codes	J-4
	MIL-DTL-24308 Type Hermetic Connector Materials, Finishes and Specifications	J-5
	MIL-DTL-24308 Type Hermetic Connector Insert Arrangements and Panel Cut-Outs	J-6
	MIL-DTL-24308 Type Hermetic Connector Style A and Style B Dimensions	J-7
280-003	Glass Sealed D-Subminiature Receptacle	J-8
280-006	Glass Sealed D-Subminiature Receptacle	J-10
280-009	Pin-To-Pin D-Subminiature Feedthrough	J-12
280-012	Rear PCB Termination Glass Sealed D-Subminiature Connector	J-14
280-013	O-Ring Panel Sealing D-Subminiature Connector	J-16
280-014	O-Ring Panel Sealing D-Subminiature Connector	J-18
287-018	Glass-Sealed D-Subminiature Connector with Front Mount O-Ring Seal	J-20
287-035	High Density Glass-Sealed D-Subminiature Connector	J-22

© 2013 Glenair, Inc. U.S. CAGE Code 06324 Printed in U.S.A.

MIL-DTL-24308
D-Subminiature Hermetic Connectors
Solder Mount Information

Style A



Style B



Glass-sealed hermetic receptacles are qualified to MIL-DTL-24308/9 and feature gold-plated iron alloy size #20 contacts and steel shells. Available in six shell sizes, these connectors are installed onto bulkheads by soldering. Choose solder cup or eyelet contacts for termination to #20 AWG wire. Choose Class H tin-plated steel shells for general purpose applications. For space applications choose Class K versions with nickel-plated stainless steel shells.

Flange Style A

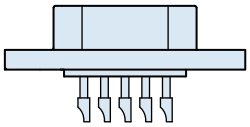

Solid connector flange with no mounting hole.

Flange Style B

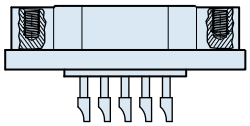

Connector flange features integral tapped #4-40 female threads for attaching mating male screw locks.

Contact Style P

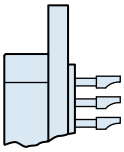

Connector is supplied with solder cup contacts.

Contact Style X

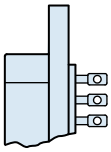

Connector is supplied with eyelet style contacts.

Shell Size	No. of Contacts	Contact Style	Flange Style	Class H Tin-Plated Steel		Class K (Space) Nickel-Plated Stainless Steel	
				Part Number	Military PN	Part Number	Military PN
1	9	Solder Cup	A	280-006H1AP	M24308/9-1	280-006K1AP	M24308/9-21
1	9	Solder Cup	B	280-006H1BP	M24308/9-11	280-006K1BP	M24308/9-31
1	9	Eyelet	A	280-006H1AX	M24308/9-6	280-006K1AX	M24308/9-26
1	9	Eyelet	B	280-006H1BX	M24308/9-16	280-006K1BX	M24308/9-36
2	15	Solder Cup	A	280-006H2AP	M24308/9-2	280-006K2AP	M24308/9-22
2	15	Solder Cup	B	280-006H2BP	M24308/9-12	280-006K2BP	M24308/9-32
2	15	Eyelet	A	280-006H2AX	M24308/9-7	280-006K2AX	M24308/9-27
2	15	Eyelet	B	280-006H2BX	M24308/9-17	280-006K2BX	M24308/9-37
3	25	Solder Cup	A	280-006H3AP	M24308/9-3	280-006K3AP	M24308/9-23
3	25	Solder Cup	B	280-006H3BP	M24308/9-13	280-006K3BP	M24308/9-33
3	25	Eyelet	A	280-006H3AX	M24308/9-8	280-006K3AX	M24308/9-28
3	25	Eyelet	B	280-006H3BX	M24308/9-18	280-006K3BX	M24308/9-38
4	37	Solder Cup	A	280-006H4AP	M24308/9-4	280-006K4AP	M24308/9-24
4	37	Solder Cup	B	280-006H4BP	M24308/9-14	280-006K4BP	M24308/9-34
4	37	Eyelet	A	280-006H4AX	M24308/9-9	280-006K4AX	M24308/9-29
4	37	Eyelet	B	280-006H4BX	M24308/9-19	280-006K4BX	M24308/9-39
5	50	Solder Cup	A	280-006H5AP	M24308/9-5	280-006K5AP	M24308/9-25
5	50	Solder Cup	B	280-006H5BP	M24308/9-15	280-006K5BP	M24308/9-35
5	50	Eyelet	A	280-006H5AX	M24308/9-10	280-006K5AX	M24308/9-30
5	50	Eyelet	B	280-006H5BX	M24308/9-20	280-006K5BX	M24308/9-40

Dimensions in Inches (millimeters) are subject to change without notice.

© 2013 Glenair, Inc.
U.S. CAGE Code 06324
Printed in U.S.A.

Glenair Hermetic Connector Products
Special Leak Rate Mod Codes

Leak Rate Designator
B – (See Table Below)

– 585 B

Mod Code
585 – Increased Hermeticity Mod Code

What is the –585 Mod Code?

Glenair offers an array of hermetic connectors with more stringent leak rate requirements. By adding "**–585**" and the designator letter "**A**", "**B**" or "**C**"—depending on the hermeticity desired—to the end of a standard part number, connectors will be built to exceed the standard 1 x 10^{-7} cc Helium per second leak rate specified on most Glenair hermetics.

HERMETIC LEAK RATE MOD CODES	
Designator	**Required Leak Rate**
A	1 x 10^{-10} cc's Helium per second
B	1 x 10^{-9} cc's Helium per second
C	1 x 10^{-8} cc's Helium per second

Not Available for High Density

Catalog Notes

For all parts in this catalog:

- All parts will be identified with manufacturer's name and part number, space permitting.
- Glenair 600 series backshell assembly tools are recommended for assembly and installation.
- Dimensions are subject to change without notice. Metric dimensions appear in parentheses in diagrams and tables, based on 1 inch = 25.4 mm, for reference only. Unless otherwise specified, the following other dimensional tolerances apply:

  .xx = ± .03 (0.8) Lengths = ± .060 (1.52)
  .xxx = ± .015 (0.4) Angles = ± 5°

Customers are advised to consult the factory for the latest specifications, particularly to confirm critical dimensions such as connector lengths, threads, and so on. When errors or mistakes are brought to our attention, corrected content is posted immediately to www.glenair.com.

Dimensions in Inches (millimeters) are subject to change without notice.

© 2013 Glenair, Inc.
U.S. CAGE Code 06324
Printed in U.S.A.

Glenair Hermetic Connector Products
Space Grade Mod Codes

What is outgassing?

Plastic and rubber materials give off gaseous molecules. For example, the smell inside a new car is caused by polymer outgassing. Heat and vacuum increase the rate of diffusion. In a spacecraft the gases coming off polymers can contaminate optical surfaces and instruments. The result is degraded performance.

How is outgassing measured?

The space industry has adopted a standardized test procedure, ***ASTM E 595***, to evaluate out-gassing properties of polymers. Small samples of material are heated to 125° C. at a vacuum of 5 X 10^{-5} torr for 24 hours. Then the sample is weighed to calculate the ***Total Mass Loss*** (TML). The TML cannot exceed 1.00% of the total initial mass. During the test, outgassed matter condenses on a cooled collector plate. The quantity of outgassed matter is caluclated to determine the ***Collected Volatile Condensable Material*** (CVCM). The CVCM cannot exceed 0.10% of the original specimen mass.

What is NASA screening?

NASA specification EEE-INST-002 provides instructions on selecting, screening and qualifying parts for use on NASA GSFC space flight projects.

What screening level is required?

NASA defines three levels of screening: level 1 for highest reliability, level 2 for high reliability, and level 3 for standard reliability. Level 3 equates to standard lot acceptance inspection. Levels 1 and 2 call for additional testing.

HOW TO ORDER SPACE GRADE CONNECTORS

Step 1: Find a Standard Part Number

Electroless nickel plated shells are preferred for space flight. Cadmium plating is prohibited.

Step 2: Select a NASA Screening Level

The term "Screening Level" refers to the final inspection procedure.

Level 1 for mission-critical highest reliability
Level 2 for high reliability
Level 3 for standard reliability

Step 3: Choose Outgassing Processing

A detailed explanation of outgassing is on the following pages. The fluorosilicone rubber seals commonly used on aerospace-grade connectors such as MIL-DTL-38999 and Series 79 connectors, along with certain bonding agents and inks, do not meet NASA outgassing requirements unless the connector is specially processed. Glenair outgassing tests have shown oven baking or thermal vacuum outgassing processing are sufficient to reduce outgassing levels to NASA standards. Oven baking is more economical than thermal vacuum outgassing.

Step 4: Select the Mod 429 Code that Matches the Desired Level of Screening and Outgassing

Use the following table to choose the right modification code. Add the mod code to the connector part number. Example: 790-024PC-13ML-***429C***

NASA SCREENING LEVELS AND MODIFICATION CODES

NASA Screening Level	Special Screening Only	Special Screening Plus Outgassing Processing	
		8 Hour Oven Bake 400° F.	Thermal Vacuum Outgassing 24 hrs. 125° C.
Level 1 Highest Reliability	Mod 429B	Mod 429J	Mod 429C
Level 2 High Reliability	Mod 429	Mod 429K	Mod 429A
Level 3 Standard Reliability	(Use standard part number)	Mod 186	Mod 186M

Dimensions in Inches (millimeters) are subject to change without notice.

© 2013 Glenair, Inc.
U.S. CAGE Code 06324
Printed in U.S.A.

MATERIALS AND FINISHES	
Contacts	Ferrous alloy, gold plated per ASTM B488, type II, code C, class 1,27.
Shell, class H	Carbon steel, tin/lead plated over nickel underplating (3% min. lead)*
Shell, class K	304L alloy stainless steel, dull nickel plated
Insulators	Vitreous glass

* Additional shell materials available including titanium. Please consult factory for ordering information

SPECIFICATIONS	
Current rating	5 Amps per contact maximum
Voltage rating (DWV)	750 VAC sea level, 175 VAC at 70,000 ft. (21,336 meters)
Insulation resistance	5000 megohms minimum
Hermeticity	Will meet or exceed requirements for leakage as indicated in MIL-DTL-24308
Contact resistance	165 milliohms maximum
Thermal vacuum outgassing (class K)	1.0% max. TML , 0.1% max. VCM
Durability	500 mating cycles
Operating temperature	-55° C to +125° C
Shock	50 g.
Vibration	20 g.
Corrosion resistance (salt spray)	48 hours
Maximum wire size	#20 AWG

Dimensions in Inches (millimeters) are subject to change without notice.

© 2013 Glenair, Inc. U.S. CAGE Code 06324 Printed in U.S.A.

MIL-DTL-24308
D-Subminiature Hermetic Connectors
Insert Arrangements and Panel Cut-Outs

STANDARD INSERT ARRANGEMENTS (#20 CONTACTS)

SHELL SIZE	NUMBER OF CONTACTS	MATING FACE OF CONNECTOR
1	9	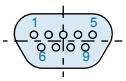
2	15	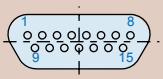
3	25	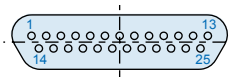
4	37	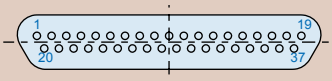
5	50	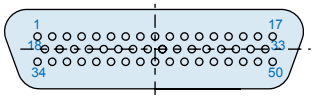

PANEL CUTOUTS

The cutout shown is for front-panel mounting of flange style A and B.

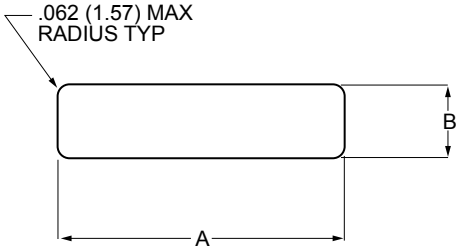

Shell Size	A		B	
	In. ± .005	mm. ± 0.13	In. ± .005	mm. ± 0.13
1	.745	18.92	.385	9.78
2	.950	24.13	.385	9.78
3	1.495	37.97	.385	9.78
4	2.145	54.48	.385	9.78
5	2.015	51.18	.520	13.21

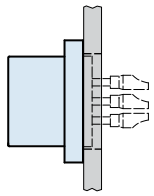

Front-Mounted Connector Installed on Bulkhead

HIGH DENSITY INSERT ARRANGEMENTS (#22 CONTACTS)

SHELL SIZE	NUMBER OF CONTACTS	MATING FACE OF CONNECTOR
1	15	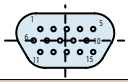
2	26	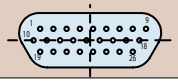
3	44	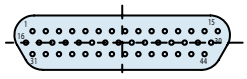
4	62	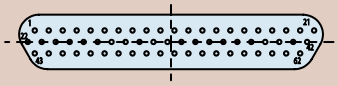
5	78	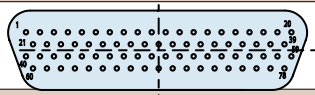
6	104	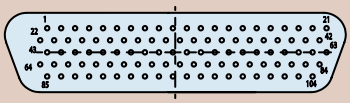

SOLDER CUP ORIENTATION

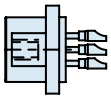

Sizes 1-4

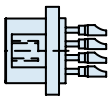

Size 5

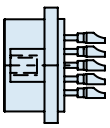

Size 6

© 2013 Glenair, Inc.

Dimensions for Flange Style A

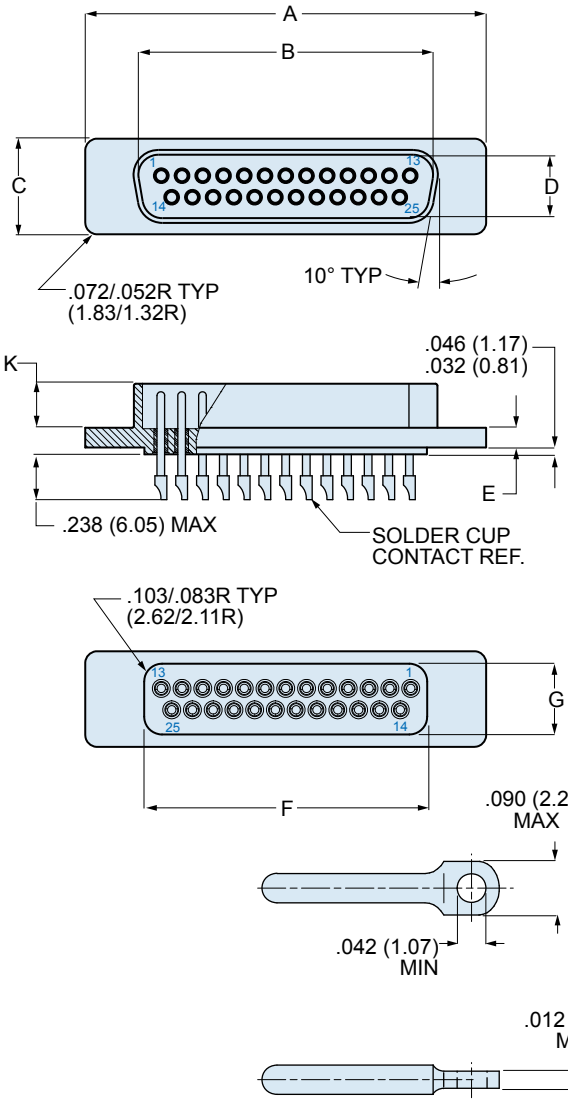

CONTACT STYLE X
EYELET

Dimensions for Flange Style B

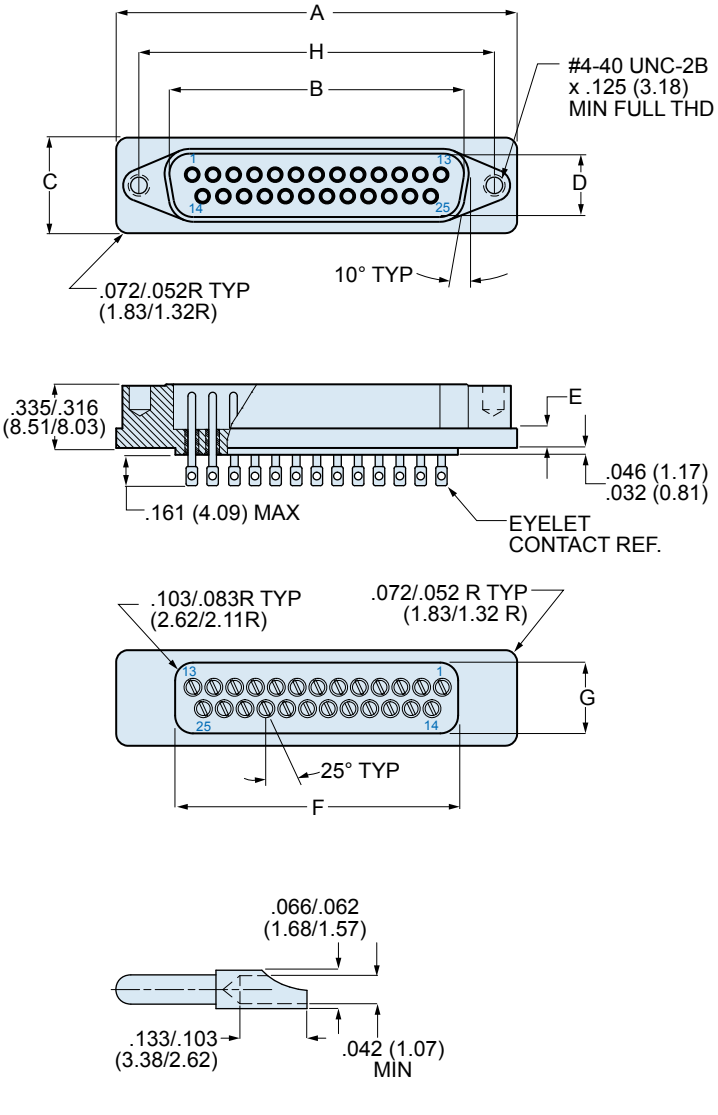

CONTACT STYLE P
SOLDER CUP

Shell Size	A		B		C		D		E		F		G		H		K	
	In.	mm.	In.	mm.	In.	mm.	In.	mm.	In.	mm.	In.	mm.	In.	mm.	In.	mm.	In.	mm.
	± .015	± 0.38	± .004	± 0.10	± .010	± 0.25	± .004	± 0.10	± .006	± 0.15	± .010	± 0.25	± .010	± 0.25	± .005	± 0.13	± .010	± 0.25
1	1.213	30.81	.667	16.94	.498	12.65	.330	8.38	.094	2.39	.725	18.42	.369	9.37	.984	24.99	.235	5.97
2	1.541	39.14	.993	25.22	.498	12.65	.330	8.38	.094	2.39	.932	23.67	.369	9.37	1.312	33.32	.235	5.97
3	2.088	53.04	1.535	38.99	.498	12.65	.330	8.38	.103	2.62	1.479	37.57	.369	9.37	1.852	47.04	.230	5.84
4	2.729	69.32	2.183	55.45	.498	12.65	.330	8.38	.103	2.62	2.125	53.98	.369	9.37	2.500	63.50	.230	5.84
5	2.635	66.93	2.079	52.81	.610	15.49	.441	11.20	.103	2.62	2.000	50.80	.500	12.70	2.406	61.11	.230	5.84

© 2013 Glenair, Inc.

280-003
MIL-DTL-24308/9 Type Hermetic
Glass-Sealed D-Subminiature Receptacle

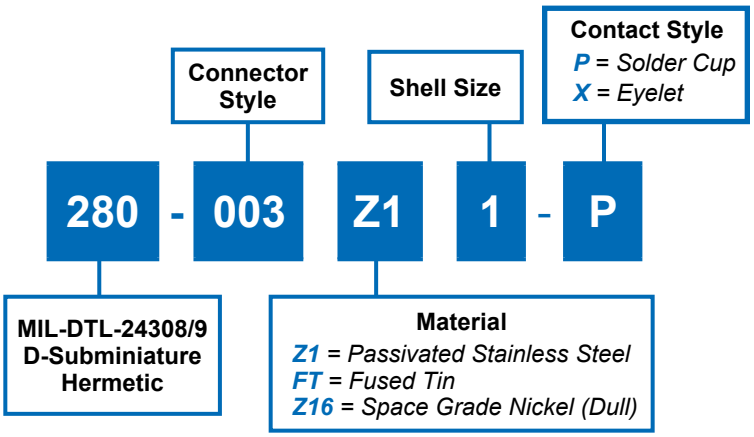

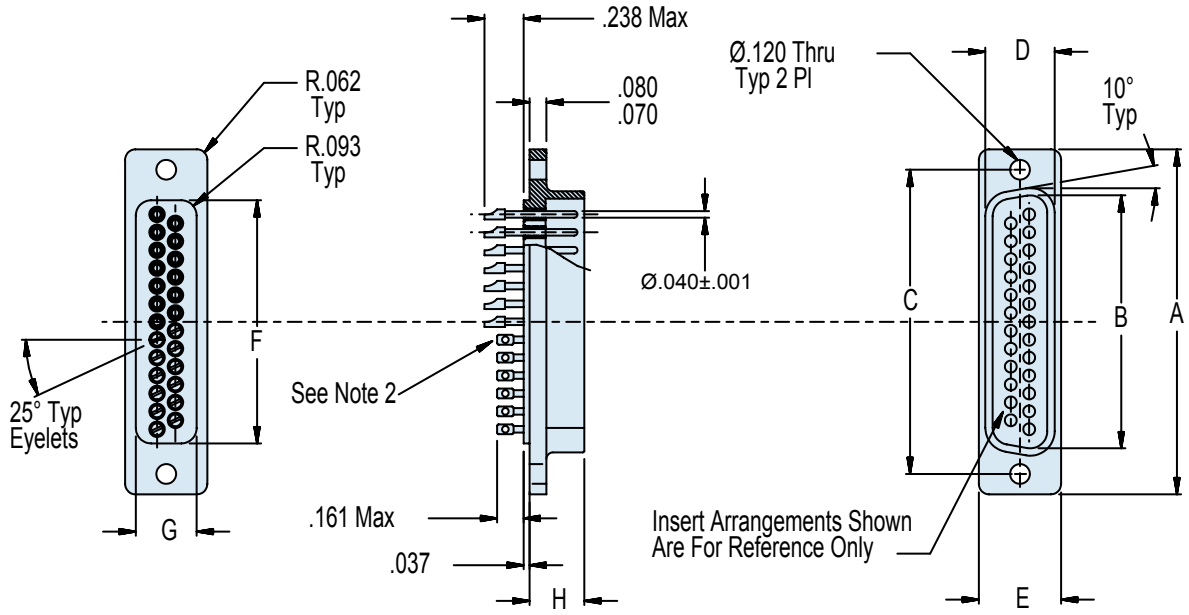

APPLICATION NOTES

1. To be identified with manufacturer's name, part number and date code, space permitting.
2. Contact Style: Eyelet or Solder Cup (See Part Number Development)
3. Material/Finish:
   Shell: Z1 = Stainless steel/passivated.
   FT = Cold rolled steel/fused tin plate.
   Z16 = Stainless steel/nickel plated, dull finish
4. Insulators - Glass bead/N.A.
5. Contacts: Pins, Alloy 52/gold plated
6. Metric Dimensions (mm) are indicated in parentheses.

Dimensions in Inches (millimeters) are subject to change without notice.

© 2013 Glenair, Inc.

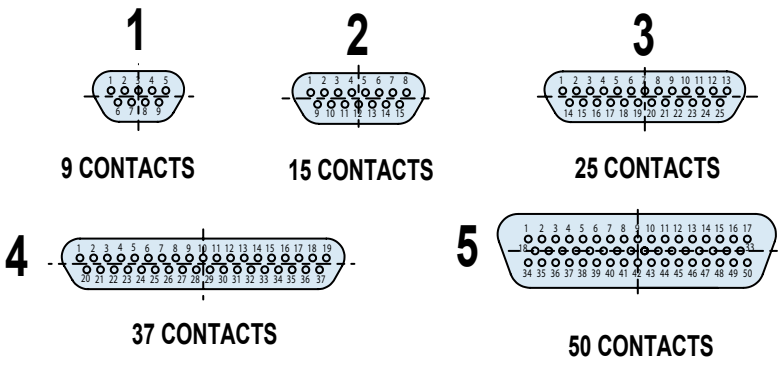

HERMETIC LEAK RATE MOD CODES	
Designator	**Required Leak Rate**
–585A	1 x 10^{-10} cc Helium per second
–585B	1 x 10^{-9} cc Helium per second
–585C	1 x 10^{-8} cc Helium per second

J

TABLE I: CONNECTOR DIMENSIONS								
Shell Size	**Dim A ± .010 (± 0.3)**	**Dim B ± .004 (± 0.1)**	**Dim C ± .005 (± 0.1)**	**Dim D ± .010 (± 0.3)**	**Dim E ± .010 (± 0.3)**	**Dim F ± .010 (± 0.3)**	**Dim G ± .010 (± 0.3)**	**Dim H ± .015 (± 0.4)**
1	1.208 (30.7)	.667 (16.9)	.984 (25.0)	.366 (9.3)	.498 (12.6)	.725 (18.4)	.369 (9.4)	.334 (8.5)
2	1.545 (39.1)	.993 (25.2)	1.312 (33.3)	.366 (9.3)	.498 (12.6)	.932 (23.7)	.369 (9.4)	.334 (8.5)
3	2.093 (53.1)	1.535 (39.0)	1.852 (47.0)	.384 (9.8)	.498 (12.6)	1.479 (37.6)	.369 (9.4)	.334 (8.5)
4	2.733 (69.3)	2.183 (55.4)	2.500 (63.5)	.384 (9.8)	.498 (12.6)	2.125 (54.0)	.369 (9.4)	.334 (8.5)
5	2.640 (67.0)	2.079 (52.8)	2.406 (61.1)	.490 (12.4)	.610 (15.5)	2.000 (50.8)	.500 (12.7)	.334 (8.5)

Dimensions in Inches (millimeters) are subject to change without notice.

© 2013 Glenair, Inc.

280-006
MIL-DTL-24308/9 Hermetic
Glass-Sealed D-Subminiature Receptacle

280	-	006	K	1	A	P
MIL-DTL-24308/9 D-Subminiature Hermetic		Connector Style	Class: *FTR* = Standard Hermetic (RoHs); *H* = Standard Hermetic; *K* = Space Grade Hermetic	Shell Size	Flange Type: *A* = Solid; *B* = Two #4-40 Lockposts	Contact Style: *P* = Solder Cup; *X* = Eyelet

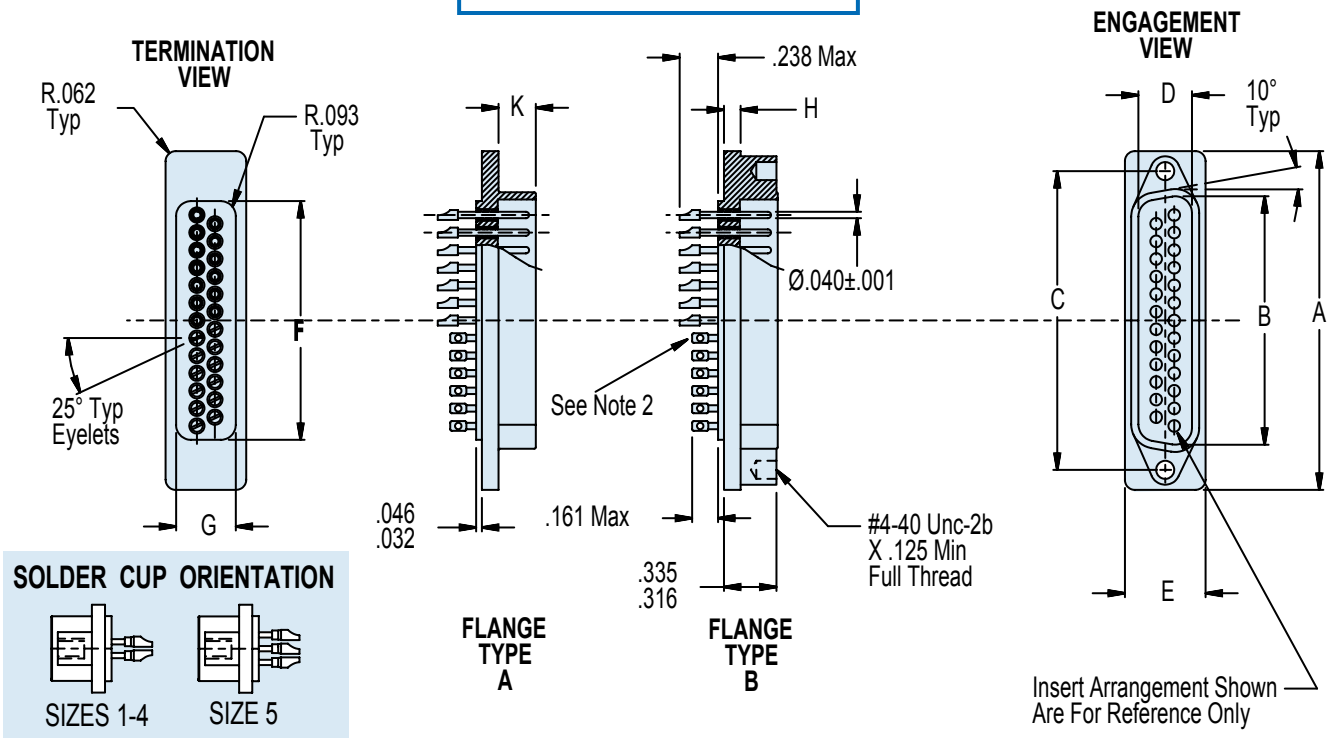

APPLICATION NOTES

1. To be identified with manufacturer's name, part number and date code, space permitting.
2. Contact Style: Eyelet or Solder Cup (See Part Number Development).
3. Material/Finish:
   Shell: H = FT - Carbon steel/tin plate.
   K = Z16 = Stainless steel/nickel plated, dull finish.
   FTR = Carbon steel/tin fused (RoHs compliant)
   Insulators: Glass bead/N.A.
   Contacts: Pins, Alloy 52/gold plated
4. Performance:
   DWV - 750 VAC Pin-to-Shell
   I.R. - 5,000 MegOhms Min @ 500 VDC
   Hermeticity <1 x 10^{-7} cc He/sec @ 1 atmosphere differential
5. Glenair 280-006 will mate with any QPL MIL-DTL-24308/1, /2 and /23 receptacle of the same size and arrangement.
6. All dimensions are typical for flange types "A" and "B". "C" dim is not applicable to flange type "A".
7. Metric dimensions (mm) are indicated in parentheses.

Dimensions in Inches (millimeters) are subject to change without notice.

© 2013 Glenair, Inc.

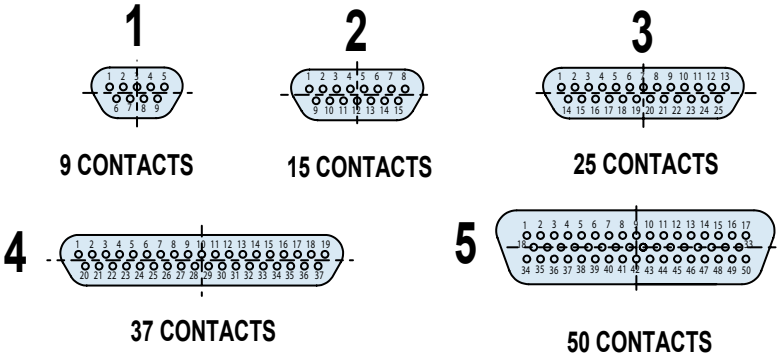

HERMETIC LEAK RATE MOD CODES	
Designator	**Required Leak Rate**
–585A	1 x 10^{-10} cc Helium per second
–585B	1 x 10^{-9} cc Helium per second
–585C	1 x 10^{-8} cc Helium per second

TABLE I: CONNECTOR DIMENSIONS

Shell Size	Dim A ± .015 (± 0.4)	Dim B ± .004 (± 0.1)	Dim C ± .005 (± 0.1)	Dim D ± .004 (± 0.1)	Dim E ± .010 (± 0.3)	Dim F ± .010 (± 0.3)	Dim G ± .010 (± 0.3)	Dim H ± .006 (± 0.2)	Dim K ± .010 (± 0.3)
1	1.213 (30.8)	.667 (16.9)	.984 (25.0)	.330 (8.4)	.498 (12.6)	.725 (18.4)	.369 (9.4)	.094 (2.4)	.235 (6.0)
2	1.541 (39.1)	.993 (25.2)	1.312 (33.3)	.330 (8.4)	.498 (12.6)	.932 (23.7)	.369 (9.4)	.094 (2.4)	.235 (6.0)
3	2.088 (53.1)	1.535 (39.0)	1.852 (47.0)	.330 (8.4)	.498 (12.6)	1.479 (37.6)	.369 (9.4)	.103 (2.6)	.230 (5.8)
4	2.729 (69.3)	2.183 (55.4)	2.500 (63.5)	.330 (8.4)	.498 (12.6)	2.125 (54.0)	.369 (9.4)	.103 (2.6)	.230 (5.8)
5	2.635 (66.0)	2.079 (52.8)	2.406 (61.1)	.441 (11.2)	.610 (15.5)	2.000 (50.8)	.500 (12.7)	.103 (2.6)	.230 (5.8)

RECOMMENDED PANEL CUTOUT
SEE TABLE 2

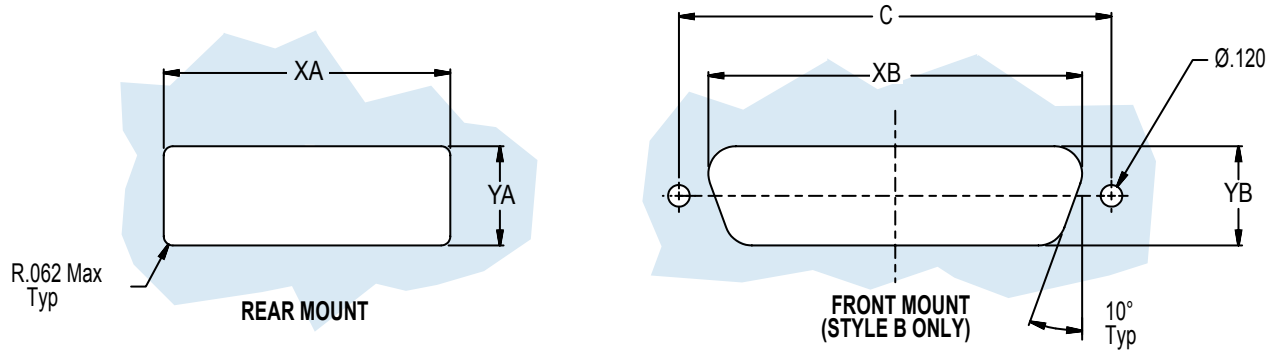

TABLE II: PANEL CUT-OUT

Shell Sizes	Style A		Style B		
	Dim XA	Dim YA	Dim XB	Dim YB	Dim C
1	.745 (18.9)	.385 (9.8)	.799 (20.0)	.462 (11.7)	.984 (25.0)
2	.950 (24.1)	.385 (9.8)	1.125 (31.8)	.462 (11.7)	1.312 (33.3)
3	1.495 (38.0)	.385 (9.8)	1.690 (42.9)	.482 (12.2)	1.852 (47.0)
4	2.145 (54.5)	.385 (9.8)	2.335 (59.3)	.482 (12.2)	2.500 (63.5)
5	2.015 (51.2)	.520 (13.2)	2.231 (56.7)	.588 (14.9)	2.406 (61.1)

Dimensions in Inches (millimeters) are subject to change without notice.

© 2013 Glenair, Inc.
U.S. CAGE Code 06324
Printed in U.S.A.

280-009
MIL-DTL-24308/9 Type Hermetic
D-Subminiature Pin-to-Pin Feedthrough

Connector Style	Shell Size	Contact Style
280 - 009	P 1 A	C

- **280 - 009**: MIL-DTL-24308/9 D-Subminiature Hermetic
- **P**: Class — *FT* = Fused Tin; *Z1* = Passivated; *P* = Nickel Plated
- **1**: Shell Size
- **A**: Flange Type — *A* = Solid; *B* = Four #4-40 Lockposts
- **C**: Contact Style — *C* = Pin-Pin

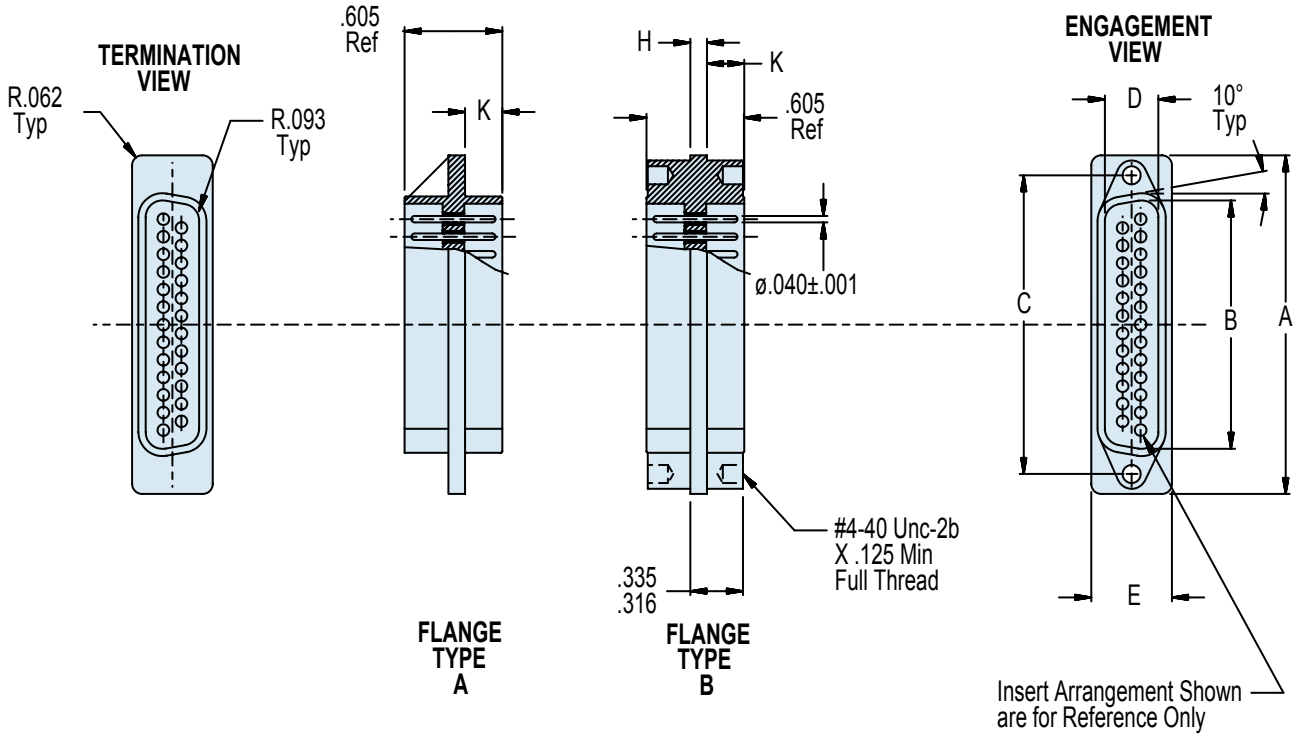

APPLICATION NOTES

1. To be identified with manufacturer's name, part number and date code, space permitting.
2. Contact Style: Pin-to-Pin only (See Part Number Development).
3. All dimensions are typical for flange types "A" and "B." "C" dim is not applicable to flange type "A."
4. Material/Finish:
   Shell: FT = Carbon steel/tin plated.
   Z1 = Stainless steel/passivated.
   P = Stainless steel/nickel plated.
   Insulators: Glass bead/N.A.
   Contacts: Pins, Alloy 52/gold plated
5. Performance:
   DWV - 750 VAC Pin-to-Shell
   I.R. - 5,000 MegOhms Min @ 500 VDC
   Hermeticity - 1 x 10^{-7} scc He/sec @1 atmosphere differential
6. Glenair 280-009 will mate with any QPL MIL-DTL-24308/1, /2 and /23 receptacle of the same size and arrangement.
7. Metric dimensions (mm) are indicated in parentheses.

Dimensions in Inches (millimeters) are subject to change without notice.

© 2013 Glenair, Inc. U.S. CAGE Code 06324 Printed in U.S.A.

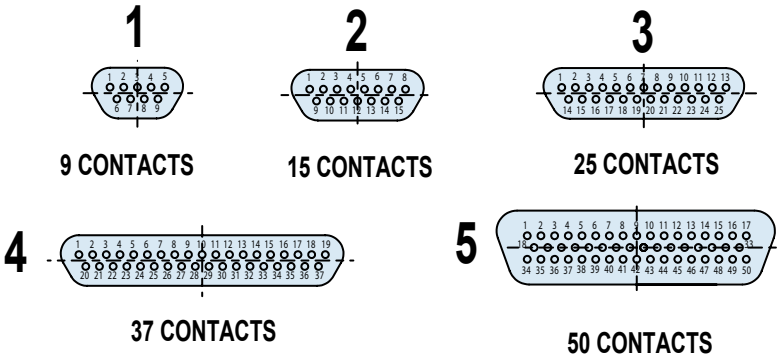

HERMETIC LEAK RATE MOD CODES	
Designator	**Required Leak Rate**
–585A	1 x 10^{-10} cc Helium per second
–585B	1 x 10^{-9} cc Helium per second
–585C	1 x 10^{-8} cc Helium per second

TABLE I: CONNECTOR DIMENSIONS

Shell Size	Dim A ± .015 (± 0.4)	Dim B ± .004 (± 0.1)	Dim C ± .005 (± 0.1)	Dim D ± .004 (± 0.1)	Dim E ± .010 (± 0.3)	Dim H ± .006 (± 0.2)	Dim K ± .010 (± 0.3)
1	1.213 (30.8)	.667 (16.9)	.984 (25.0)	.330 (8.4)	.498 (12.6)	.094 (2.4)	.235 (6.0)
2	1.541 (39.1)	.993 (25.2)	1.312 (33.3)	.330 (8.4)	.498 (12.6)	.094 (2.4)	.235 (6.0)
3	2.088 (53.0)	1.535 (39.0)	1.852 (47.0)	.330 (8.4)	.498 (12.6)	.103 (2.6)	.230 (5.8)
4	2.729 (14.7)	2.183 (55.4)	2.500 (63.5)	.330 (8.4)	.498 (12.6)	.103 (2.6)	.230 (5.8)
5	2.635 (66.9)	2.079 (52.8)	2.406 (61.1)	.441 (11.2)	.610 (15.5)	.103 (2.6)	.230 (5.8)

RECOMMENDED PANEL CUTOUT
SEE TABLE 2

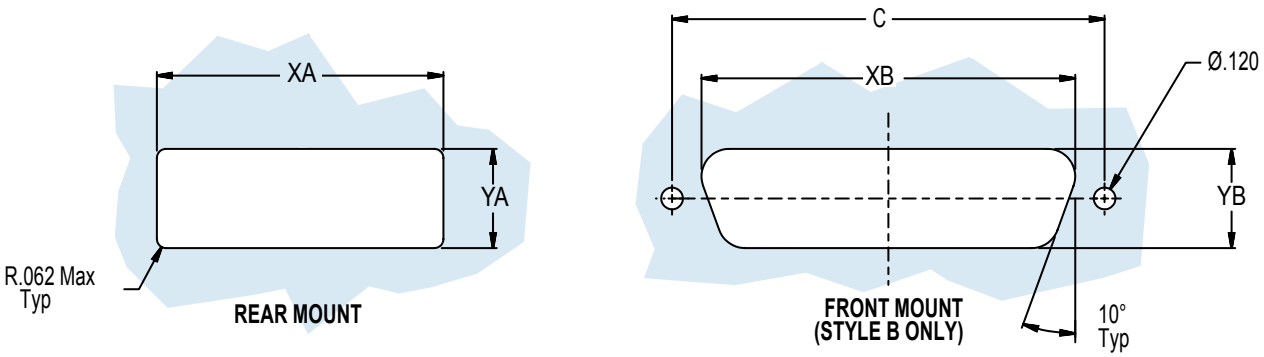

TABLE II: PANEL CUT-OUT DIMENSIONS

Shell Sizes	Style A		Style B		
	Dim XA	Dim YA	Dim XB	Dim YB	Dim C
1	.745 (18.9)	.385 (9.8)	.799 (20.3)	.462 (11.7)	.984 (24.9)
2	.950 (24.1)	.385 (9.8)	1.125 (28.6)	.482 (12.2)	1.312 (33.3)
3	1.495 (38.0)	.385 (9.8)	1.690 (42.9)	.482 (12.2)	1.852 (47.0)
4	2.145 (54.5)	.385 (9.8)	2.335 (59.3)	.482 (12.2)	2.500 (63.5)
5	2.015 (51.2)	.520 (13.2)	2.231 (56.7)	.588 (14.9)	2.406 (61.1)

Dimensions in Inches (millimeters) are subject to change without notice.

© 2013 Glenair, Inc.

280-012
MIL-DTL-24308/9 Type Hermetic
Rear Printed Circuit Board Termination
Glass-Sealed D-Subminiature Connector

Connector Style		Shell Size		
280	- 012	H	1	C
MIL-DTL-24308/9 D-Subminiature Hermetic		Class *H* = Standard *K* = Space Grade		Contact Style *(Pin Only)* *C* = P.C. Termination

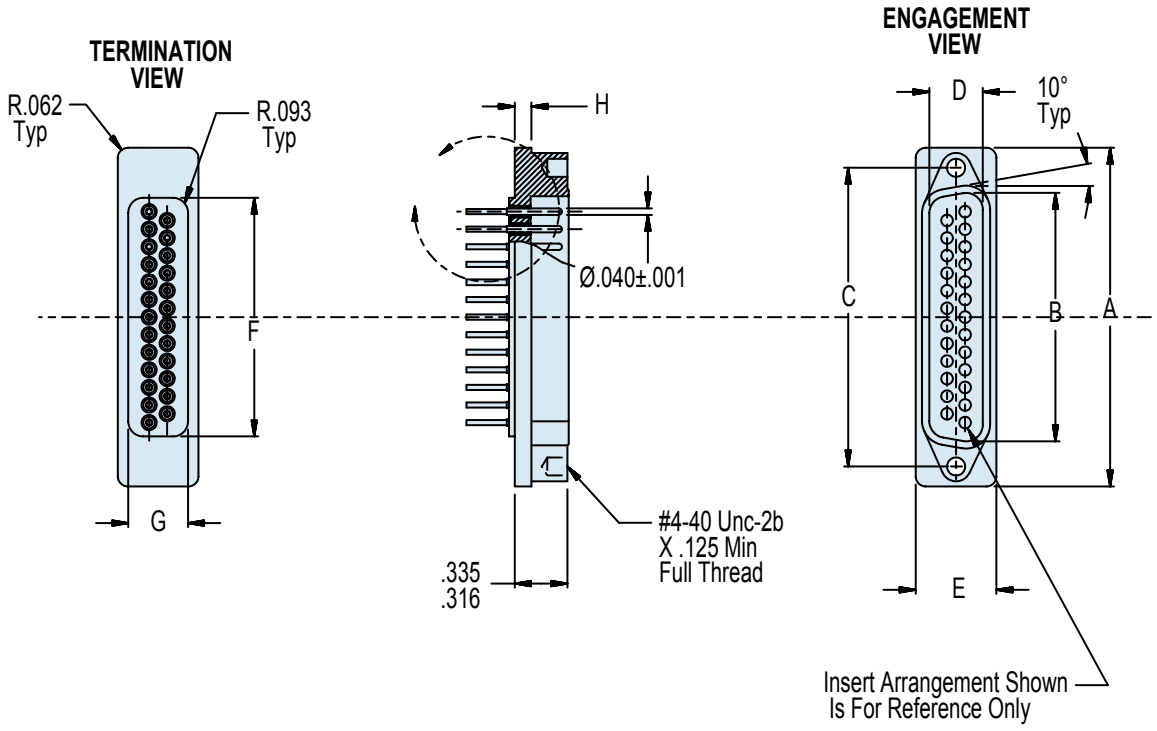

APPLICATION NOTES

1. To be identified with manufacturer's name, part number and date code, space permitting.
2. Contact Style: Printed circuit termination only.
3. Material/Finish:
   Shell: H = FT - Carbon steel/tin plated.
   K = Z16 - Stainless steel/nickel plated, dull finish.
   Insulators: Glass bead/N.A.
   Contacts: Pins, Alloy 52/gold plated
4. Performance:
   DWV - 750 VAC Pin-to-Shell
   I.R. - 5,000 MegOhms Min @ 500 VDC
   Hermeticity - 1 x 10^{-7} scc He/sec @1 atmosphere differential
5. Glenair 280-012 will mate with any QPL MIL-DTL-24308/1, /2 and /23 receptacle of the same size and arrangement.
6. Metric dimensions (mm) are indicated in parentheses.

Dimensions in Inches (millimeters) are subject to change without notice.

© 2013 Glenair, Inc.
U.S. CAGE Code 06324
Printed in U.S.A.

280-012
MIL-DTL-24308/9 Type Hermetic
Rear Printed Circuit Board Termination
Glass-Sealed D-Subminiature Connector

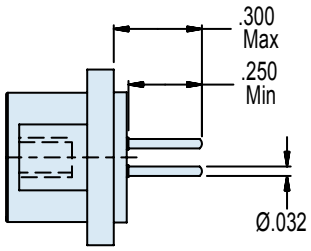

Contact Detail

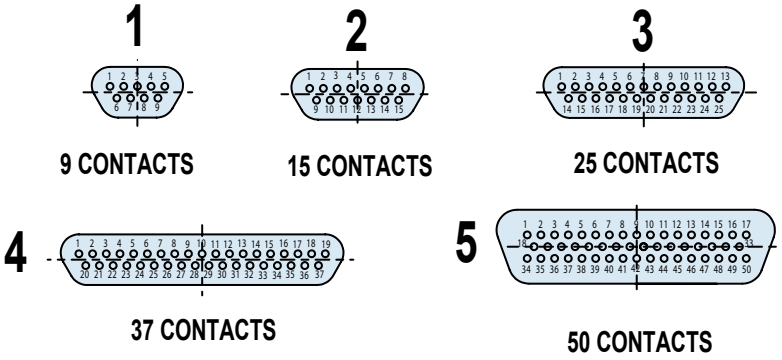

SOLDER CUP ORIENTATION

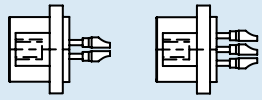

TABLE I: CONNECTOR DIMENSIONS

Shell Size	Dim A ± .015 (± 0.4)	Dim B ± .004 (± 0.1)	Dim C ± .005 (± 0.1)	Dim D ± .004 (± 0.1)	Dim E ± .010 (± 0.3)	Dim F ± .010 (± 0.3)	Dim G ± .010 (± 0.3)	Dim H ± .006 (± 0.2)	Dim K ± .010 (± 0.3)
1	1.213 (30.8)	.667 (16.9)	.984 (25.0)	.330 (8.4)	.498 (12.6)	.725 (18.4)	.369 (9.4)	.094 (2.4)	.235 (6.0)
2	1.541 (39.1)	.993 (25.2)	1.312 (33.3)	.330 (8.4)	.498 (12.6)	.932 (23.7)	.369 (9.4)	.094 (2.4)	.235 (6.0)
3	2.088 (53.0)	1.535 (39.0)	1.852 (47.0)	.330 (8.4)	.498 (12.6)	1.479 (37.6)	.369 (9.4)	.103 (2.6)	.230 (5.8)
4	2.729 (69.3)	2.183 (55.4)	2.500 (63.5)	.330 (8.4)	.498 (12.6)	2.125 (54.0)	.369 (9.4)	.103 (2.6)	.230 (5.8)
5	2.635 (66.9)	2.079 (52.8)	2.406 (61.1)	.441 (11.2)	.610 (15.5)	2.000 (50.8)	.500 (12.7)	.103 (2.6)	.230 (5.8)

RECOMMENDED PANEL CUTOUT
SEE TABLE II

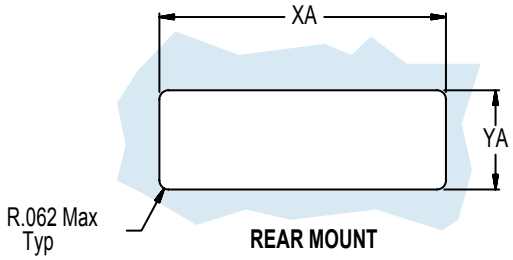

REAR MOUNT

HERMETIC LEAK RATE MOD CODES	
Designator	**Required Leak Rate**
–585A	1 x 10^{-10} cc Helium per second
–585B	1 x 10^{-9} cc Helium per second
–585C	1 x 10^{-8} cc Helium per second

TABLE II: PANEL CUT-OUT

Shell Sizes	Style A		Style B		
	Dim XA	Dim YA	Dim XB	Dim YB	Dim C
1	.745 (18.9)	.385 (9.8)	.799 (20.0)	.462 (11.7)	.984 (25.0)
2	.950 (24.1)	.385 (9.8)	1.125 (31.8)	.462 (11.7)	1.312 (33.3)
3	1.495 (38.0)	.385 (9.8)	1.690 (42.9)	.482 (12.2)	1.852 (47.0)
4	2.145 (54.5)	.385 (9.8)	2.335 (59.3)	.482 (12.2)	2.500 (63.5)
5	2.015 (51.2)	.520 (13.2)	2.231 (56.7)	.588 (14.9)	2.406 (61.1)

Dimensions in Inches (millimeters) are subject to change without notice.

© 2013 Glenair, Inc.
U.S. CAGE Code 06324
Printed in U.S.A.

280-013
MIL-DTL-24308/9 Type Hermetic
O-Ring Panel Sealing
Glass-Sealed D-Subminiature High Density Connector

Connector Style	Shell Size		O-Ring Material (See Table III, Omit for Viton®)		
280	- 013	H	1	P	- 1

- **280** — MIL-DTL-24308/9 D-Subminiature Hermetic
- **H** — Class: *H = Kovar® Alloy/Nickel Plated*
- **P** — Contact Style (Pin Only): *P = Solder Cup*, *X = Eyelet*

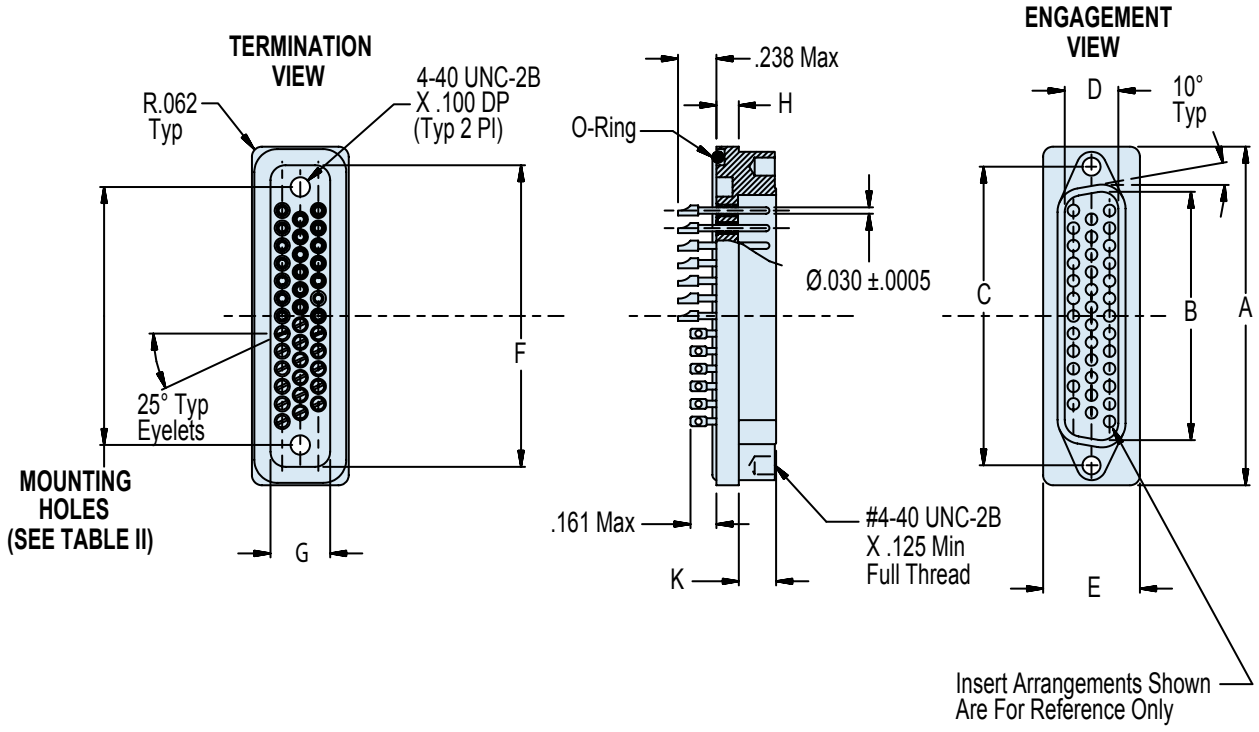

APPLICATION NOTES

1. To be identified with manufacturer's name, part number and date code, space permitting.
2. Contact Style: Eyelet or solder cup (see part development).
3. Material/Finish:
   Shell: Kovar® alloy/nickel plated.
   Insulators: Glass bead/N.A.
   Contacts: Kovar® alloy/gold plated
   O-Ring: Specify (see Table III)/N.A.
4. Performance:
   DWV - 500 VAC Pin-to-Shell
   I.R. - 5,000 MegOhms Min @ 500 VDC
   Hermeticity - <1 x 10 scc He/sec @1x10^{-8} atmosphere differential
5. Glenair 280-013 will mate with any QPL MIL-DTL-24308/1, /2 and /23 receptacle of the same size and arrangement.
6. Metric dimensions (mm) are indicated in parentheses.

Dimensions in Inches (millimeters) are subject to change without notice.

© 2013 Glenair, Inc.
U.S. CAGE Code 06324
Printed in U.S.A.

TABLE III: O-RING MATERIAL	
Dash Number	Material
None	Viton®
-1	Nitrile
-2	Fluorosilicone
-3	Silicone

CONTACT ARRANGEMENTS

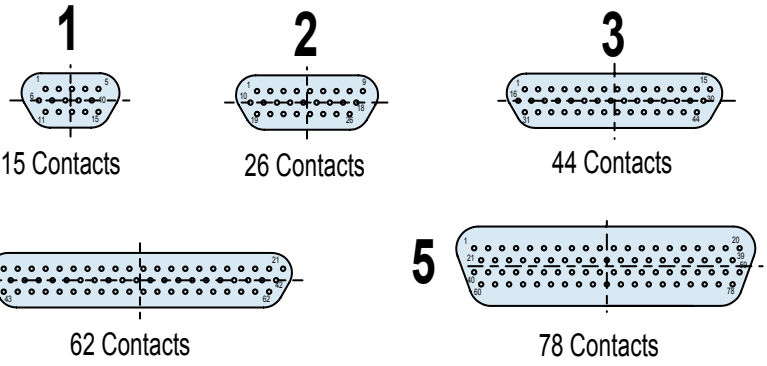

SOLDER CUP ORIENTATION



TABLE I: CONNECTOR DIMENSIONS										
Shell Size	Dim A ± .015 (± 0.4)	Dim B ± .004 (± 0.1)	Dim C ± .005 (± 0.1)	Dim D ± .004 (± 0.1)	Dim E ± .010 (± 0.3)	Dim F ± .010 (± 0.3)	Dim G ± .010 (± 0.3)	Dim H ± .006 (± 0.2)	Dim K ± .010 (± 0.3)	O-Ring 2-
1	1.213 (30.8)	.667 (16.9)	.984 (25.0)	.330 (8.4)	.600 (15.2)	.874 (22.2)	.272 (6.9)	.155 (3.9)	.235 (6.0)	-017
2	1.541 (39.1)	.993 (25.2)	1.312 (33.3)	.330 (8.4)	.600 (15.2)	1.270 (32.3)	.372 (9.5)	.155 (3.9)	.235 (6.0)	-022
3	2.088 (53.0)	1.535 (39.0)	1.852 (47.0)	.330 (8.4)	.600 (15.2)	1.760 (44.7)	.372 (9.5)	.160 (4.1)	.230 (5.8)	-027
4	2.729 (69.3)	2.183 (55.4)	2.500 (63.5)	.330 (8.4)	.600 (15.2)	2.418 (61.4)	.372 (9.5)	.160 (4.1)	.230 (5.8)	-031
5	2.635 (66.9)	2.079 (52.8)	2.406 (61.1)	.441 (11.2)	.610 (15.5)	2.418 (61.4)	.372 (9.5)	.160 (4.1)	.230 (5.8)	-031

RECOMMENDED PANEL CUTOUT
SEE TABLE II

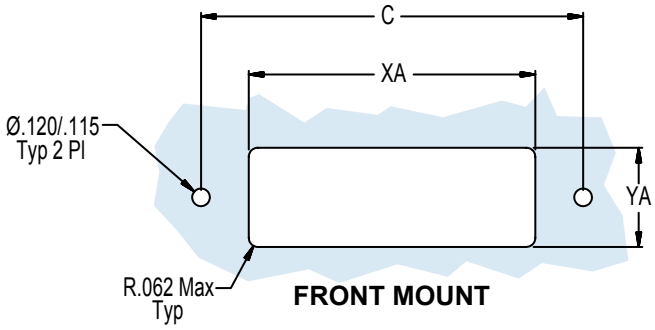

TABLE II: PANEL CUT-OUT			
Shell Size	Dim XA	Dim YA	Dim C
1	.500 (12.7)	.220 (5.6)	.674 (17.1)
2	.830 (21.1)	.220 (5.6)	1.070 (27.2)
3	1.375 (34.9)	.220 (5.6)	1.560 (39.6)
4	2.000 (50.8)	.220 (5.6)	2.150 (54.6)
5	1.850 (47.0)	.300 (7.6)	2.200 (55.9)

Dimensions in Inches (millimeters) are subject to change without notice.

© 2013 Glenair, Inc.

280-014
MIL-DTL-24308/9 Type Hermetic
O-Ring Panel Sealing
Glass-Sealed D-Subminiature Connector

Connector Style	Shell Size	O-Ring Material (See Table III, Omit for Viton®)
280 - 014	H	1	P - 1

MIL-DTL-24308/9 D-Subminiature Hermetic

Class
H = Carbon Steel/ Tin Plated
K = Z16 - Stainless Steel/Nickel Plated, Dull Finish

Contact Style *(Pin Only)*
P = Solder Cup
X = Eyelet

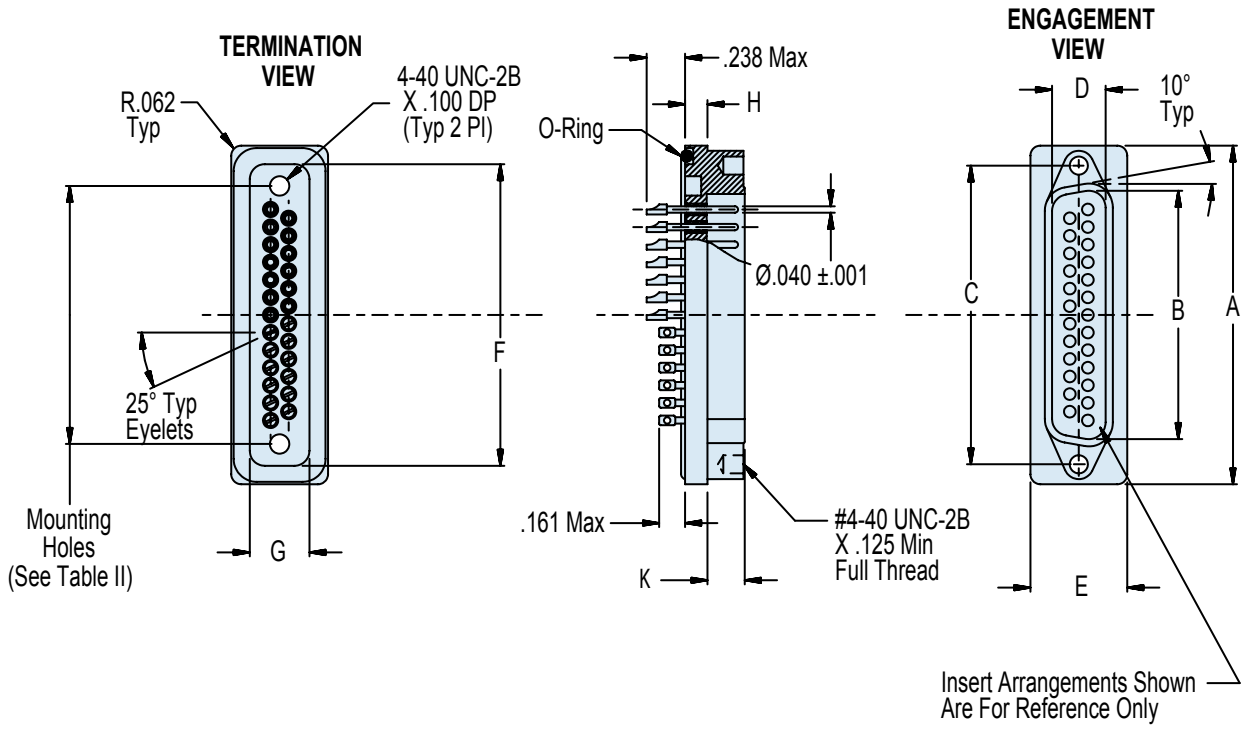

APPLICATION NOTES

1. To be identified with manufacturer's name, part number and date code, space permitting.
2. Contact Style: Eyelet or solder cup (see part development).
3. Material/Finish:
   Shell: H = FT - Carbon steel/tin plated.
   K = Z16 - Stainless steel/nickel plated dull finish.
   Insulators: Glass bead/N.A.
   Contacts: Alloy 52/gold plated
   O-Ring: Specify (see Table III)/N.A.
4. Performance:
   DWV - 500 VAC Pin-to-Shell
   I.R. - 5,000 MegOhms Min @ 500 VDC
   Hermeticity - <1 x 10^{-7} scc He/sec @1 atmosphere differential
5. Glenair 280-014 will mate with any QPL MIL-DTL-24308/1, /2 and /23 receptacle of the same size and arrangement.
6. Metric dimensions (mm) are indicated in parentheses.

Dimensions in Inches (millimeters) are subject to change without notice.

© 2013 Glenair, Inc.
U.S. CAGE Code 06324
Printed in U.S.A.

TABLE III: O-RING MATERIAL	
Dash Number	Material
None	Viton®
-1	Nitrile
-2	Fluorosilicone
-3	Silicone

SOLDER CUP ORIENTATION

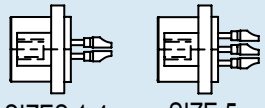

SIZES 1-4 SIZE 5

1

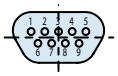

9 CONTACTS

2

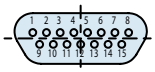

15 CONTACTS

3

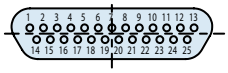

25 CONTACTS

4

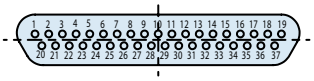

37 CONTACTS

5

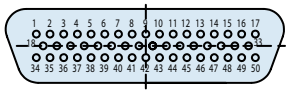

50 CONTACTS

TABLE I: CONNECTOR DIMENSIONS										
Shell Size	Dim A ± .015 (± 0.4)	Dim B ± .004 (± 0.1)	Dim C ± .005 (± 0.1)	Dim D ± .004 (± 0.1)	Dim E ± .010 (± 0.3)	Dim F ± .010 (± 0.3)	Dim G ± .010 (± 0.3)	Dim H ± .006 (± 0.2)	Dim K ± .010 (± 0.3)	O-Ring 2-
1	1.213 (30.8)	.667 (16.9)	.984 (25.0)	.330 (8.4)	.600 (15.2)	.874 (22.2)	.272 (6.9)	.155 (3.9)	.235 (6.0)	-017
2	1.541 (39.1)	.993 (25.2)	1.312 (33.3)	.330 (8.4)	.600 (15.2)	1.270 (32.3)	.372 (9.5)	.155 (3.9)	.235 (6.0)	-022
3	2.088 (53.0)	1.535 (39.0)	1.852 (47.0)	.330 (8.4)	.600 (15.2)	1.760 (44.7)	.372 (9.5)	.160 (4.1)	.230 (5.8)	-027
4	2.729 (69.3)	2.183 (55.4)	2.500 (63.5)	.330 (8.4)	.600 (15.2)	2.418 (61.4)	.372 (9.5)	.160 (4.1)	.230 (5.8)	-031
5	2.635 (66.9)	2.079 (52.8)	2.406 (61.1)	.441 (11.2)	.610 (15.5)	2.418 (61.4)	.372 (9.5)	.160 (4.1)	.230 (5.8)	-031

RECOMMENDED PANEL CUTOUT
SEE TABLE II

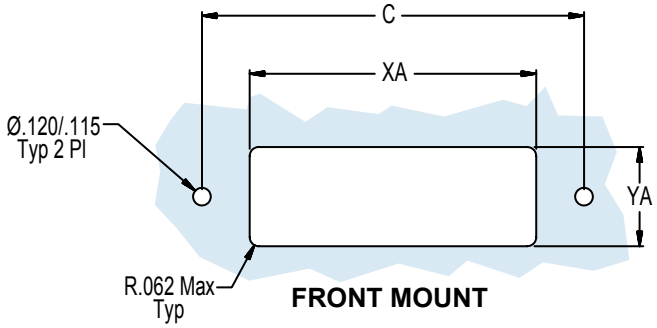

FRONT MOUNT

TABLE II: PANEL CUT-OUT			
Shell Size	Dim XA	Dim YA	Dim C
1	.520 (13.2)	.220 (5.6)	.674 (17.1)
2	.850 (21.6)	.300 (7.6)	1.070 (27.2)
3	1.380 (35.1)	.300 (7.6)	1.560 (39.6)
4	2.035 (51.7)	.300 (7.6)	2.200 (55.9)
5	1.850 (47.0)	.320 (8.1)	2.200 (55.9)

HERMETIC LEAK RATE MOD CODES	
Designator	Required Leak Rate
–585A	1 x 10^{-10} cc Helium per second
–585B	1 x 10^{-9} cc Helium per second
–585C	1 x 10^{-8} cc Helium per second

Dimensions in Inches (millimeters) are subject to change without notice.

© 2013 Glenair, Inc.
U.S. CAGE Code 06324
Printed in U.S.A.

287-018
MIL-DTL-24308/9 Type Hermetic
Glass-Sealed D-Subminiature Connector
Front Mount O-Ring Seal

287	-	018	K	1	A	P	-	1
MIL-DTL-24308/9 D-Subminiature Hermetic		Connector Style	Class: *H* = Standard, *K* = Space Grade	Shell Size	Flange Type: *A* = Solid, *B* = Two #4-40 Lockposts	Contact Style (Pin Only): *P* = Solder Cup, *X* = Eyelet		O-Ring Material: See Table III (Omit for Viton®)

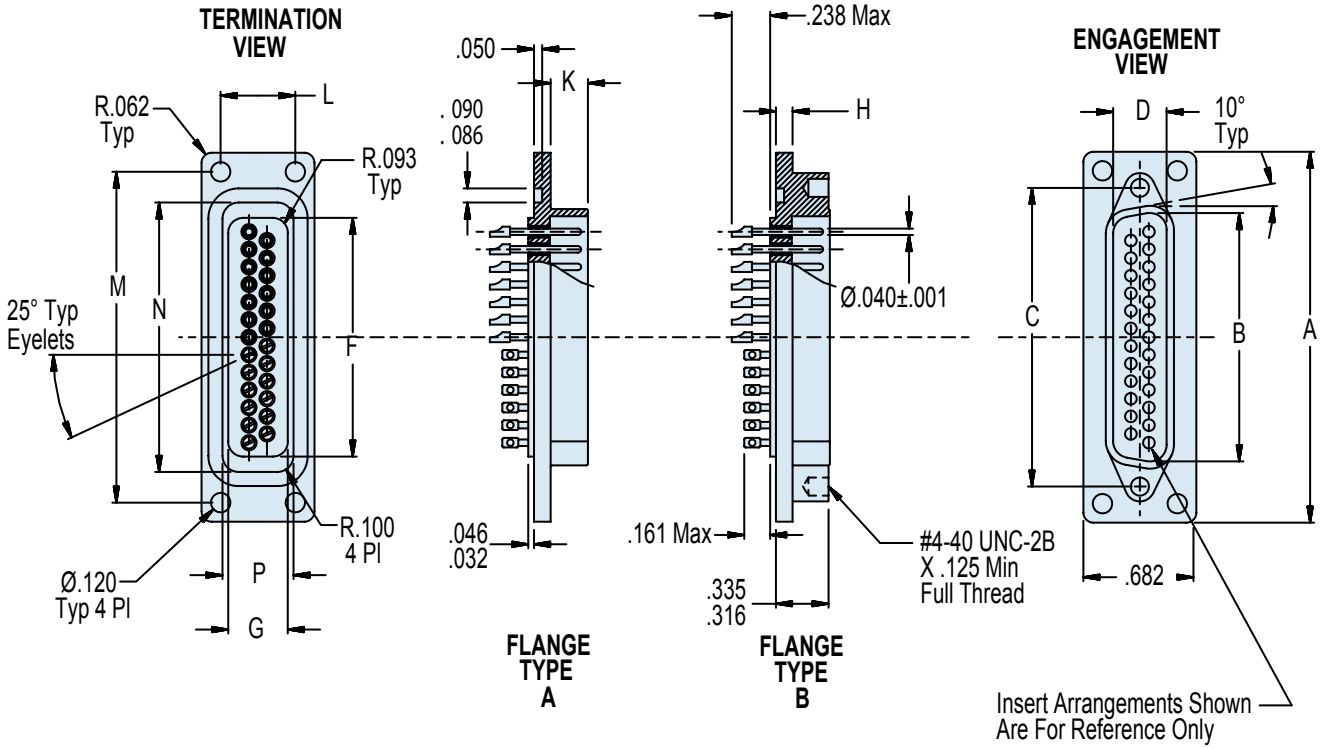

APPLICATION NOTES

1. To be identified with manufacturer's name, part number and date code, space permitting.
2. Contact Style: Eyelet or solder cup (see part development).
3. Material/Finish:
   Shell: H = FT - Carbon steel/tin plated.
   K = Z16 - Stainless steel/nickel plated dull finish.
   Insulators: Glass bead/N.A.
   Contacts: Pins, alloy 52/gold plated.
4. Metric dimensions (mm) are indicated in parentheses.
5. Performance:
   DWV - 750 VAC Pin-to-Shell
   I.R. - 5,000 Megohms Min @ 500 VDC
   Hermeticity - <1 x 10^{-7} scc He/sec @ 1 atmosphere differential.
6. All dimensions are typical for flange types "A" and "B". "C" dim is not applicable to flange type "A".
7. Glenair 287-018 will mate with any QPL MIL-DTL-24308/1, /2 and /23 receptacle of the same size and arrangement.

Dimensions in Inches (millimeters) are subject to change without notice.

© 2013 Glenair, Inc. U.S. CAGE Code 06324 Printed in U.S.A.

287-018
MIL-DTL-24308/9 Type Hermetic
Glass-Sealed D-Subminiature Connector
Front Mount O-Ring Seal

TABLE III: O-RING MATERIAL	
Dash Number	Material
None	Viton®
-1	Nitrile
-2	Fluorosilicone
-3	Silicone

SOLDER CUP ORIENTATION

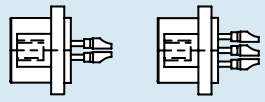

SIZES 1-4 SIZE 5

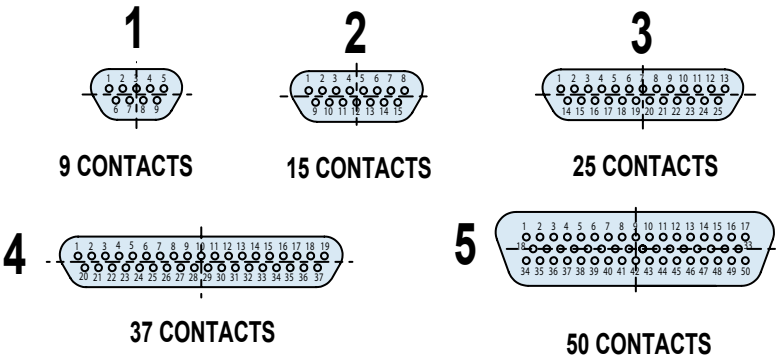

TABLE I: CONNECTOR DIMENSIONS

Shell Size	Dim A ±.015 (±0.4)	Dim B ±.004 (±0.1)	Dim C ±.005 (±0.1)	Dim D ±.004 (±0.1)	Dim E ±.010 (±0.3)	Dim F ±.010 (±0.3)	Dim G ±.010 (±0.3)	Dim H ±.006 (±0.2)	Dim K ±.010 (±0.3)	Dim L BSC	M BSC	N ±.005 (±0.1)	P ±.005 (±0.1)
1	1.413 (35.9)	.667 (16.9)	.984 (25.0)	.330 (8.4)	.698 (17.7)	.725 (18.4)	.369 (9.4)	.094 (2.4)	.235 (6.0)	.462 (11.7)	1.177 (29.9)	.805 (20.4)	.440 (11.2)
2	1.741 (44.2)	.993 (25.2)	1.312 (33.3)	.330 (8.4)	.698 (17.7)	.932 (23.7)	.369 (9.4)	.094 (2.4)	.235 (6.0)	.462 (11.7)	1.499 (38.1)	1.002 (25.5)	.440 (11.2)
3	2.288 (58.1)	1.535 (39.0)	1.852 (47.0)	.330 (8.4)	.698 (17.7)	1.479 (37.6)	.369 (9.4)	.103 (2.6)	.230 (5.8)	.462 (11.7)	1.972 (50.1)	1.589 (40.4)	.440 (11.2)
4	2.929 (74.4)	2.183 (55.4)	2.500 (63.5)	.330 (8.4)	.698 (17.7)	2.125 (54.0)	.369 (9.4)	.103 (2.6)	.230 (5.8)	.462 (11.7)	2.693 (68.4)	2.183 (55.4)	.440 (11.2)
5	2.835 (72.0)	2.079 (52.8)	2.406 (61.1)	.441 (11.2)	.810 (20.6)	2.000 (50.8)	.500 (12.7)	.103 (2.6)	.230 (5.8)	.654 (16.6)	2.599 (66.0)	2.250 (57.2)	.570 (14.5)

RECOMMENDED PANEL CUTOUT
SEE TABLE 2

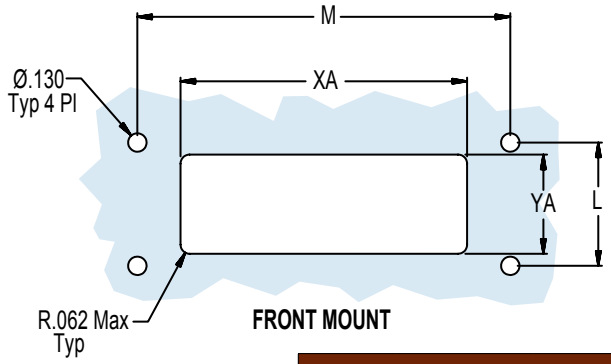

HERMETIC LEAK RATE MOD CODES	
Designator	Required Leak Rate
–585A	1 x 10^{-10} cc Helium per second
–585B	1 x 10^{-9} cc Helium per second
–585C	1 x 10^{-8} cc Helium per second

TABLE II: PANEL CUT-OUT

Shell Size	Dim XA	Dim YA	Dim L	Dim M
1	.745 (18.9)	.385 (9.8)	.462 (11.7)	1.177 (29.9)
2	.950 (24.1)	.385 (9.8)	.462 (11.7)	1.499 (38.1)
3	1.495 (38.0)	.385 (9.8)	.462 (11.7)	1.972 (50.1)
4	2.145 (54.5)	.385 (9.8)	.462 (11.7)	2.693 (68.4)
5	2.015 (51.2)	.520 (13.2)	.654 (16.6)	2.599 (66.0)

Dimensions in Inches (millimeters) are subject to change without notice.

© 2013 Glenair, Inc. U.S. CAGE Code 06324 Printed in U.S.A.

287-035
MIL-DTL-24308/9 Type Hermetic High Density
Glass-Sealed D-Subminiature Connector

Basic Number	Shell Size	Shell Type		
287-035	FT	1	P	A

Shell Type
A = Straight Flange
B = Integral Jackpost

Class
FT = Fused Tin
Z1 = Passivated
ZL = Nickel Plated

Contact Style
(Pin Only)
P = Solder Cup
X = Eyelet

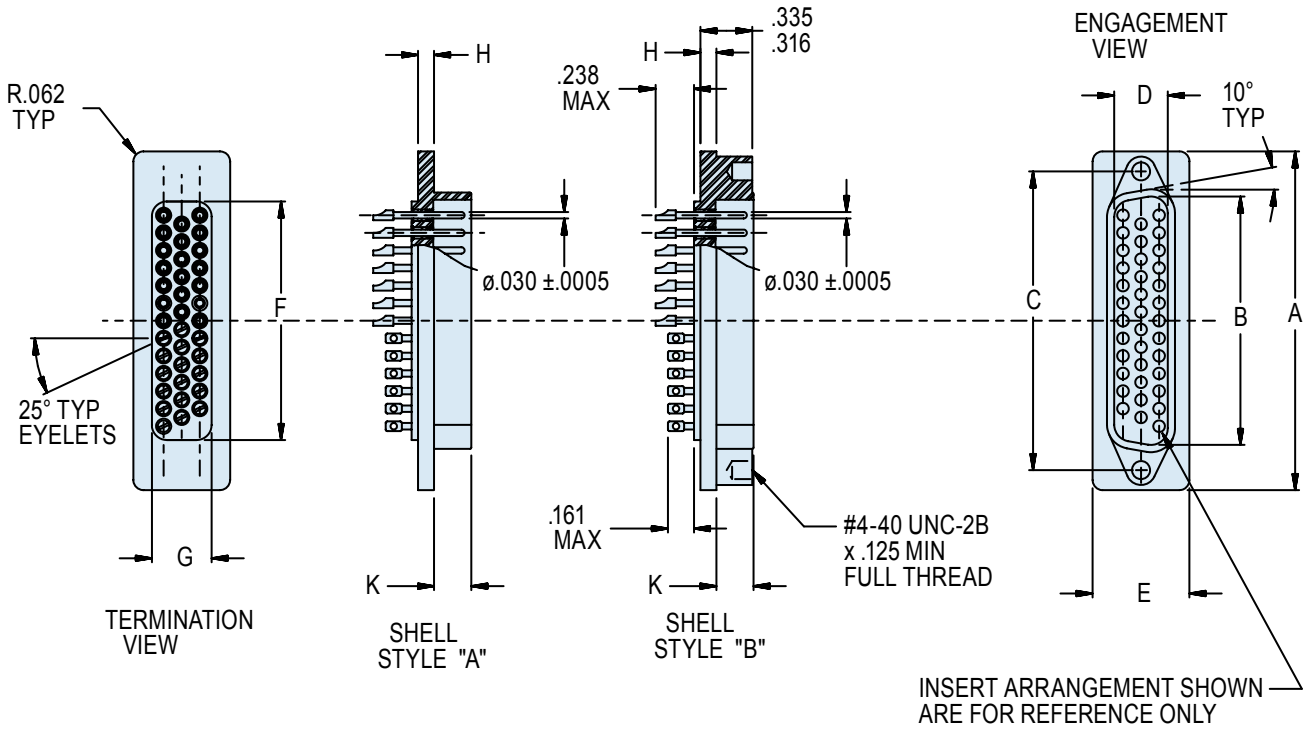

APPLICATION NOTES

1. To be identified with manufacturer's name, part number and date code, space permitting.
2. Contact Style: Eyelet or solder cup (see part development).
3. Material/Finish:
   Shell: FT = Carbon Steel / Fused Tin
   Z1 = CRES / Passivated
   ZL = CRES / Nickel Plated
   Insulators: Glass bead/N.A.
   Contacts: Nickel-Iron Alloy / Gold Plated
4. Metric dimensions (mm) are indicated in parentheses.
5. Performance:
   DWV - 500 VAC Pin-to-Shell
   I.R. - 5,000 Megohms Min @ 500 VDC
   Hermeticity - <1 x 10^{-5} scc He/sec @ 1 atmosphere differential.
6. Glenair 287-035 will mate with any QPL MIL-DTL-24308/2, /6 and /23 receptacle of the same size and arrangement.

Dimensions in Inches (millimeters) are subject to change without notice.

© 2013 Glenair, Inc. U.S. CAGE Code 06324 Printed in U.S.A.

SOLDER CUP ORIENTATION

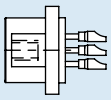

SIZES 1-4

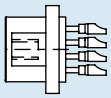

SIZE 5

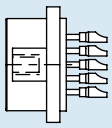

SIZE 6

CONTACT ARRANGEMENT

1

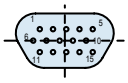

15 CONTACTS

2

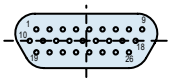

26 CONTACTS

3

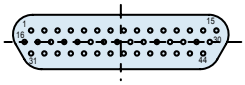

44 CONTACTS

4

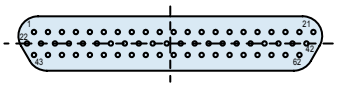

62 CONTACTS

5

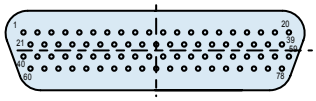

78 CONTACTS

6

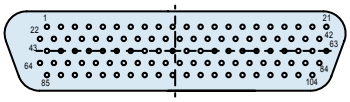

104 CONTACTS

RECOMMENDED PANEL CUTOUT
SEE TABLE II

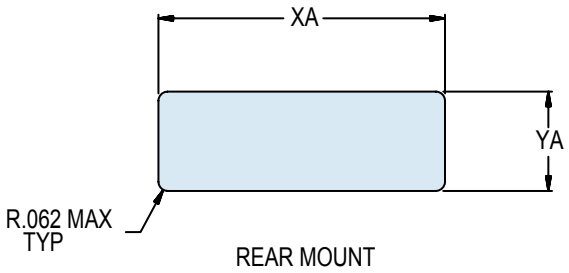

REAR MOUNT

TABLE I: CONNECTOR DIMENSIONS

Shell Size	Dim A ± .015 (± 0.4)	Dim B ± .005 (± 0.1)	Dim C ± .005 (± 0.1)	Dim D ± .004 (± 0.1)	Dim E ± .010 (± 0.3)	Dim F ± .010 (± 0.3)	Dim G ± .005 (± 0.1)	Dim H ± .010 (± 0.3)	Dim K ± .010 (± 0.3)
1	1.213 (30.8)	.667 (16.9)	.984 (25.0)	.330 (8.4)	.498 (12.6)	.759 (19.3)	.422 (10.7)	.094 (2.4)	.235 (6.0)
2	1.541 (39.1)	.993 (25.2)	1.312 (33.3)	.330 (8.4)	.498 (12.6)	1.083 (27.5)	.422 (10.7)	.094 (2.4)	.235 (6.0)
3	2.088 (53.0)	1.535 (39.0)	1.852 (47.0)	.330 (8.4)	.498 (12.6)	1.625 (41.3)	.422 (10.7)	.103 (2.6)	.230 (5.8)
4	2.729 (69.3)	2.183 (55.4)	2.500 (63.5)	.330 (8.4)	.498 (12.6)	2.272 (57.7)	.422 (10.7)	.103 (2.6)	.230 (5.8)
5	2.635 (66.9)	2.079 (52.8)	2.406 (61.1)	.441 (11.2)	.610 (15.5)	2.178 (55.3)	.534 (13.6)	.103 (2.6)	.230 (5.8)
6	2.729 (69.3)	2.212 (56.2)	2.500 (63.5)	.503 (12.8)	.668 (17.0)	2.302 (58.5)	.596 (15.1)	.103 (2.6)	.230 (5.8)

TABLE II: PANEL CUT-OUT

Shell Size	Dim. XA	Dim. YA
	± .005 (.13)	
1	.775 (19.7)	.438 (11.1)
2	1.099 (27.9)	.438 (11.1)
3	1.642 (41.7)	.438 (11.1)
4	2.288 (58.1)	.438 (11.1)
5	2.194 (55.7)	.550 (14.0)
6	2.318 (58.9)	.612 (15.5)

Dimensions in Inches (millimeters) are subject to change without notice.

© 2013 Glenair, Inc.
U.S. CAGE Code 06324
Printed in U.S.A.

GLASS-TO-METAL SEAL

MIL-DTL-83513 TYPE

Micro-D Hermetic Connectors



Glenair MIL-DTL-83513 type Micro-D hermetic connectors are ideal for high-pressure/low-leakage applications where size, weight and vibration resistance are a critical concern. Sophisticated electronics enclosures, vacuum chambers and cryogenic equipment all benefit from the airtight seal and moisture resistant plating found on Glenair hermetic Micro-D connectors. Solder mount, weld mount and rear panel O-ring shell styles are available to meet a variety of design requirements. Kovar®—an iron nickel alloy—is used in both the shells and contacts, and provides a chemical bond with the glass insulator for maximum hermeticity. Shells are then plated with nickel after the glass insulator is fired to enhance corrosion resistance. Contacts are plated with gold to ensure superior electrical conductivity.

MICRO D

Glenair®

Glenair, Inc.
1211 Air Way
Glendale, CA
91201-2497
818-247-6000
sales@glenair.com
www.glenair.com

A Full Range of MIL-DTL-83513 Type Micro-D Hermetic Connectors

Glenair Micro-D Hermetic Connectors are offered with a minimum of 9 sockets, up to a maximum of 100 sockets—in two, three and four row solder cup and pigtail configurations. Fluorosilicone rubber interfacial seals and O-rings ensure positive sealing with plug connectors and panels. Gold plated Kovar® socket contacts boast superior vibration resistance when used in conjunction with Glenair's innovative TwistPin contact system in the plug.

Quick Selection Guide

Part Number	Description	Page
	MIL-DTL-83513 Type Micro-D Hermetic Connector Introduction	K-2
	Glenair Hermetic Connector Products Special Leak rate Mod Code	K-3
	MIL-DTL-83513 Type Micro-D Connectors General Information	K-4
	MIL-DTL-83513 Type Micro-D Design Notes and Contact Arrangements	K-5
	MIL-DTL-83513 Type Micro-D Materials and Finishes and Performance Specifications	K-6
177-140H and 177-704H	Solder Mount Micro-D Hermetic Connector	K-7
177-705H and 177-706H	Rear Panel Mount with O-Ring Micro-D Hermetic Connector	K-9
177-232	Front Mount Socket Shell Micro-D Hermetic Connector, Size 37	K-12
177-859	Front Mount Socket Shell Micro-D Hermetic Connector, Sizes 9 to 21	K-13

© 2013 Glenair, Inc. U.S. CAGE Code 06324 Printed in U.S.A.

A Full Range of MIL-DTL-83513 Type Micro-D Hermetic Connectors

Product Applications

Glenair MIL-DTL-83513 type Micro-D hermetic connectors are ideal for high-pressure/low-leakage applications where size, weight and vibration resistance are a critical concern. Sophisticated electronics enclosures, vacuum chambers and cryogenic equipment all benefit from the airtight seal and moisture resistant plating found on Glenair hermetic Micro-D connectors. Solder mount, weld mount and rear panel O-ring shell styles are available to meet a variety of design requirements.

seals and O-rings ensure positive sealing with plug connectors and panels.

Gold plated Kovar® socket contacts boast superior vibration resistance when used in conjunction with Glenair's innovative TwistPin contact system in the plug.

Same-Day Inventory

Because Glenair makes all its hermetic connectors in-house, including the machining of shells, molding of interfacial seals and firing of hermetic components, we can offer you outstanding availability on stock products and fast turnaround on special orders.

Catalog contents—including part numbers, materials and dimensions—are accurate to the best of our ability when we go to print. Even so, customers are advised to consult the factory for the latest specifications, particularly to confirm critical dimensions such as connector lengths, threads, and so on. Corrected content is posted immediately to www.glenair.com.

Weld Mount, Solder Mount and Rear Panel Sealing Options

Vibration and Shock Resistant TwistPin Contact System

9 to 100 Sockets in 9 Shell Sizes

Space Grade Special Screening Available

1 x 10^{-6} cc/Helium per Second Leakage Rate

Solder Cup, PC Tail and Pre-Wired Pigtail Termination Options

Machined Kovar® Shells and Contacts with Moisture Resistant Plating



Materials

Kovar®—an iron nickel alloy—is used in both the shells and contacts, and provides a chemical bond with the glass insulator for maximum hermeticity. Shells are then plated with nickel after the glass insulator is fired to enhance corrosion resistance. Contacts are plated with gold to ensure superior electrical conductivity.

Connectors are offered with a minimum of 9 sockets, up to a maximum of 100 sockets—in two, three and four row solder cup and pigtail configurations. Fluorosilicone rubber interfacial

Dimensions in Inches (millimeters) are subject to change without notice.

© 2013 Glenair, Inc. U.S. CAGE Code 06324 Printed in U.S.A.

Glenair Hermetic Connector Products
Space Grade Mod Code

What is outgassing?

Plastic and rubber materials give off gaseous molecules. For example, the smell inside a new car is caused by polymer outgassing. Heat and vacuum increase the rate of diffusion. In a spacecraft the gases coming off polymers can contaminate optical surfaces and instruments. The result is degraded performance.

How is outgassing measured?

The space industry has adopted a standardized test procedure, ***ASTM E 595***, to evaluate out-gassing properties of polymers. Small samples of material are heated to 125° C. at a vacuum of 5 X 10^{-5} torr for 24 hours. Then the sample is weighed to calculate the ***Total Mass Loss*** (TML). The TML cannot exceed 1.00% of the total initial mass. During the test, outgassed matter condenses on a cooled collector plate. The quantity of outgassed matter is caluclated to determine the ***Collected Volatile Condensable Material*** (CVCM). The CVCM cannot exceed 0.10% of the original specimen mass.

What is NASA screening?

NASA specification EEE-INST-002 provides instructions on selecting, screening and qualifying parts for use on NASA GSFC space flight projects.

What screening level is required?

NASA defines three levels of screening: level 1 for highest reliability, level 2 for high reliability, and level 3 for standard reliability. Level 3 equates to standard lot acceptance inspection. Levels 1 and 2 call for additional testing.

HOW TO ORDER SPACE GRADE CONNECTORS

Step 1: Find a Standard Part Number

Electroless nickel plated shells are preferred for space flight. Cadmium plating is prohibited.

Step 2: Select a NASA Screening Level

The term "Screening Level" refers to the final inspection procedure.

Level 1 for mission-critical highest reliability
Level 2 for high reliability
Level 3 for standard reliability

Step 3: Choose Outgassing Processing

A detailed explanation of outgassing is on the following pages. The fluorosilicone rubber seals commonly used on aerospace-grade connectors such as MIL-DTL-38999 and Series 79 connectors, along with certain bonding agents and inks, do not meet NASA outgassing requirements unless the connector is specially processed. Glenair outgassing tests have shown oven baking or thermal vacuum outgassing processing are sufficient to reduce outgassing levels to NASA standards. Oven baking is more economical than thermal vacuum outgassing.

Step 4: Select the Mod 429 Code that Matches the Desired Level of Screening and Outgassing

Use the following table to choose the right modification code. Add the mod code to the connector part number. Example: 790-024PC-13ML-***429C***

NASA SCREENING LEVELS AND MODIFICATION CODES

NASA Screening Level	Special Screening Only	Special Screening Plus Outgassing Processing	
		8 Hour Oven Bake 400° F.	Thermal Vacuum Outgassing 24 hrs. 125° C.
Level 1 Highest Reliability	Mod 429B	Mod 429J	Mod 429C
Level 2 High Reliability	Mod 429	Mod 429K	Mod 429A
Level 3 Standard Reliability	(Use standard part number)	Mod 186	Mod 186M

Dimensions in Inches (millimeters) are subject to change without notice.

© 2013 Glenair, Inc.
U.S. CAGE Code 06324
Printed in U.S.A.

MIL-DTL-83513 Type Micro-D Hermetic Connectors
General Information

MICRO-D HERMETIC CONNECTORS

Hermeticity is defined as "the state or condition of being airtight". Sophisticated military electronics enclosures can experience electrical failure from ingress of moisture. System engineers can design the enclosure to withstand exposure to moisture and condensation by using "moisture-hardened" components and conformal coatings, but often the most practical approach is to install hermetically sealed electrical I/O connectors. Glass-to-metal seals provide assurance that, over the life of the enclosure, the accumulated amount of water vapor inside the box will not exceed the amount necessary to form condensation. Other applications for Micro-D hermetic connectors include vacuum chambers, cryogenics, and enclosures filled with inert gas.

Kovar® Alloy

Glenair's hermetic Micro-D shells and contacts are made from a special alloy called Kovar®, an iron-nickel-cobalt alloy consisting of 54% Fe, 29% Ni, and 17% Co. This alloy is covered by SAE specification AMS-I-23011. Kovar has a relatively low coefficient of thermal expansion.

Micro-D Hermetic Plating Options

Unlike regular connectors which are plated as components prior to assembly, hermetic connectors are electroplated after the parts are fired and cleaned of oxides. Typically the contacts are gold-plated and the connector shell is nickel-plated.

Matched Glass-To-Metal Seals

Matched seals rely on a chemical bond between the metal and the glass. Kovar® contacts and shells are first exposed to high temperatures in order to develop an oxide coating. Then, the borosilicate glass and metal components are assembled with fixtures and are fused in a firing furnace at 900° C. A strong chemical bond is created between the metal and glass. Unlike compression seals which rely on different thermal coefficients of expansion between the glass and metal, a matched seal offers better resistance to stress from thermal extremes.

Connector Installation

Hermetic connectors are typically soldered or welded into panels or bulkheads. Laser welding is a good option if the connector is mounted onto Kovar®. If the panel is aluminum alloy or stainless steel, then soldering is recommended. Micro-D's with o-ring seals offer another alternative. O-rings, when installed properly, will provide a very low permeability seal. The seating surface must be free from scratches or imperfections. A 32 finish is acceptable, but a 16 finish is preferred. The o-ring can be coated with a light coat of vacuum grease.

Hermetic Testing

All Micro-D hermetic connectors are 100% tested prior to shipment. A helium leak test is performed to certify the hermetic seal. This test is conducted by inducing a 1 ATM vacuum on one side of the connector. Helium gas is released on the other side, and a mass spectrometer "counts" the number of helium molecules that penetrate the connector seal. Helium leak testing takes advantage of the small size of a helium molecule compared to air or water vapor. Helium is inert, rare in our atmosphere, and is easy to detect with a mass spectrometer.

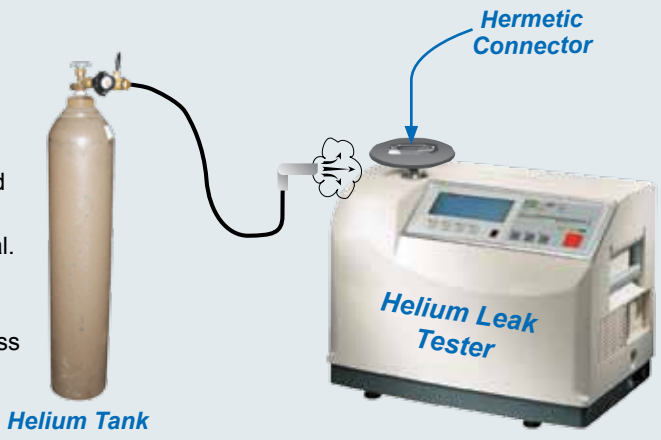

Dimensions in Inches (millimeters) are subject to change without notice.

© 2013 Glenair, Inc. U.S. CAGE Code 06324 Printed in U.S.A.

MICRO-D HERMETIC CONNECTOR DESIGN NOTES

"Why can't I get a hermetic Micro-D with pin contacts instead of sockets?"

The Micro-D TwistPin contact cannot be made from the materials that are required for hermetic contacts. Hermetic contacts are made from ferrous alloys such as Kovar® or Alloy 52. These alloys do not have spring properties. The Micro-D TwistPin contact is made from spring-temper beryllium copper. The Micro-D socket contact is a cylinder and does not provide any spring force, so Micro-D hermetic connectors are always receptacle connectors with socket contacts.

"What about high pressure?" "What is the maximum recommended pressure rating for a hermetic Micro-D?"

Glenair hermetic Micro-D's are built to safely withstand 1000 PSI of hydrostatic pressure in an open face (unmated) condition.

MICRO-D CONTACT ARRANGEMENTS (FACE VIEW SOCKET CONNECTOR)

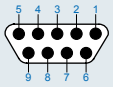

9 Socket

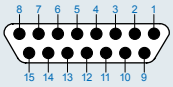

15 Socket

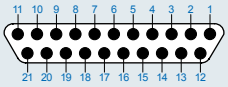

21 Socket

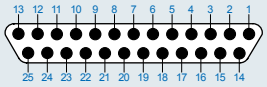

25 Socket

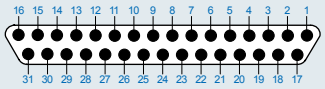

31 Socket

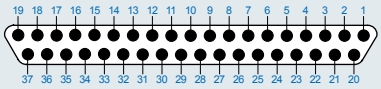

37 Socket

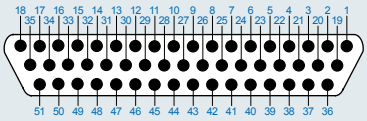

51 Socket (Standard 3 Row)

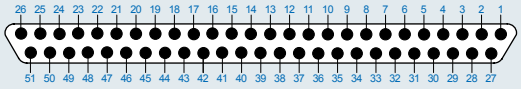

51 Socket (Special 2 Row)

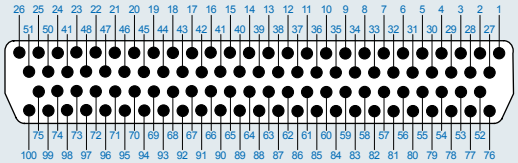

100 Socket

K

Dimensions in Inches (millimeters) are subject to change without notice.

© 2013 Glenair, Inc.
U.S. CAGE Code 06324
Printed in U.S.A.

MIL-DTL-83513 Type Micro-D Hermetic Connectors

Materials/Finishes and Performance Specifications

MATERIALS AND FINISHES	
Connector Shell	Kovar® Alloy in Accordance With SAE AMS-I-23011 Class 1, Plated with Electrodeposited Nickel In Accordance With SAE-AMS-QQ-N-290 Class 2, 0.0002-0.0003 Inches Thick.
Insulator	Borosilicate Glass
Interfacial Seal	Flourosilicone Rubber, Blue
Socket Contact	Kovar® Alloy in Accordance With SAE AMS-I-23011 Class 1, Gold Plated In Accordance With ASTM B 488 Type II, Class 1.27 (50 microinches minimum) over Nickel Underplate in Accordance With SAE-AMS-QQ-N-290 Class 2.
O-Ring	Flourosilicone Rubber, Blue
Encapsulant	Epoxy

PERFORMANCE SPECIFICATIONS	
Current Rating	1.5 AMP
Dielectric Withstanding Voltage	150 VAC
Working Voltage	100 VDC
Insulation Resistance	5000 Megohms Minimum
Contact Resistance	40-50 Milliohms Maximum
Hermeticity	1 x 10^{-7} Maximum Helium Leak Rate per Second at One Atmosphere
Operating Temperature	-55° C. to +125° C.
Shock	50 g.
Vibration	20 g.
Outgassing	Meets NASA Outgassing Requirements (MOD Code 429)
Mating Force	(10 Ounces) X (# of Contacts)
For additional performance requirements, please refer to MIL-DTL-83513	

HERMETIC LEAK RATE MOD CODES	
Designator	**Required Leak Rate**
–585A	1 x 10^{-10} cc Helium per second
–585B	1 x 10^{-9} cc Helium per second
–585C	1 x 10^{-8} cc Helium per second

Dimensions in Inches (millimeters) are subject to change without notice.

© 2013 Glenair, Inc. U.S. CAGE Code 06324 Printed in U.S.A.

177-140H and 177-704H
MIL-DTL-83513 Type Micro-D Hermetic Connectors
Solder Mount



Solder these 177-140 hermetic Micro-D connectors. Featuring a matched glass-to-metal seal, these socket receptacles are designed for panel mounting.

Kovar® Shells and Contacts comply with applicable MIL-DTL-83513 requirements and are 100% intermateable with standard connectors.

Choose 9 to 100 Contacts, with gold-plated contacts and nickel-plated shells. These connectors feature integral female jackposts.

HOW TO ORDER SOLDER CUP AND PC TAIL CONNECTORS

Series	Layout Number of Contacts	Contact Type	Termination Type
177-140H Micro-D Hermetic Socket Receptacle, Solder or Weld Mounting	**9** **15** **21** **25** **31** **37** **51-2** **51-3** **100**	**S** – Socket	**S** – Solder Cup **P** – PC Tail
Sample Part Number			
177-140H	**15**	**S**	**P**

HOW TO ORDER PRE-WIRED CONNECTORS

Series	Layout	Contact Type	Wire Gage (AWG)	Wire Type	Wire Color	Wire Length Inches
177-704H	**9** **15** **21** **25** **31** **37** **51-2** **51-3** **100**	**S** – Socket	**6** – #26 **8** – #28 **0** – #30	**K** – M22759/11 600 Vrms Teflon® (TFE) (Not Available in #30 AWG) **J** – M22759/33 600 Vrms Modified Cross-Linked Tefzel® (ETFE)	**1** – White **2** – Yellow **5** – Color-Coded Stripes Per MIL-STD-681 (#26 gage only) **7** – Ten Color Repeat	**18** Wire Length In Inches. "18" Specifies 18 Inches.
Sample Part Number						
177-704H	**25**	**S**	**6**	**K**	**1**	**– 18**

Dimensions in Inches (millimeters) are subject to change without notice.

© 2013 Glenair, Inc.
U.S. CAGE Code 06324
Printed in U.S.A.

177-140H and 177-704H
MIL-DTL-83513 Type Micro-D Hermetic Connectors
Solder Mount

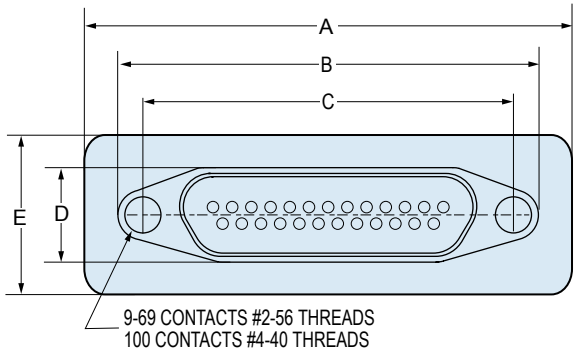

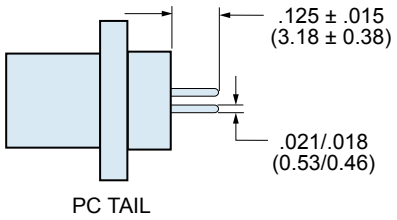

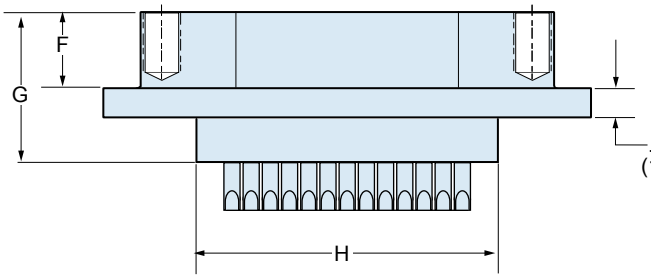

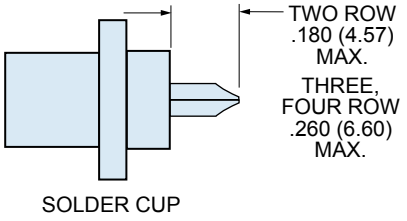

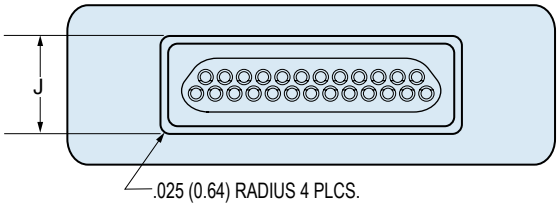

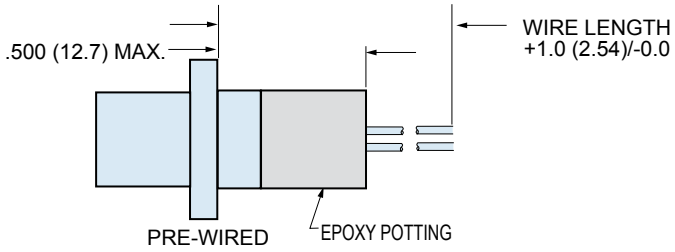

K

DIMENSIONS																		
Layout	A Max.		B MAX.		C		D Max.		E Max.		F		G Max.		H		J	
	In. ± .005	mm. ± 0.13	In . ± .005	mm. ± 0.13	In . ± .003	mm. ± 0.08	In.	mm.	In.	mm.	In. ± .004	mm. ± 0.10	In.	mm.	In. ± .004	mm. ± 0.10	In. ± .004	mm. ± 0.10
9S	.785	19.94	.695	14.35	.565	14.35	.250	6.35	.310	7.87	.195	4.95	.394	10.01	.398	10.11	.268	6.81
15S	1.030	26.16	.855	21.71	.715	18.16	.250	6.35	.425	10.80	.195	4.95	.394	10.01	.535	13.59	.255	6.48
21S	1.180	29.97	1.005	25.53	.865	21.97	.250	6.35	.425	10.80	.195	4.95	.394	10.01	.750	19.05	.255	6.48
25S	1.280	32.51	1.105	28.06	.965	24.51	.250	6.35	.425	10.80	.195	4.95	.394	10.01	.785	19.94	.255	6.48
31S	1.430	36.32	1.255	31.88	1.115	28.32	.250	6.35	.425	10.80	.195	4.95	.394	10.01	.935	23.75	.255	6.48
37S	1.580	40.13	1.425	36.20	1.265	32.13	.250	6.35	.425	10.80	.195	4.95	.394	10.01	1.085	27.56	.255	6.48
51S 2 row	1.930	49.02	1.615	41.02	1.775	45.08	.310	7.87	.425	10.80	.199	5.05	.394	10.01	1.435	36.45	.250	6.35
51S 3 row	1.530	38.86	1.215	30.86	1.361	34.57	.310	7.87	.468	11.89	.199	5.05	.394	10.01	1.032	33.101	.300	7.62
100S	2.260	57.40	1.800	45.72	2.010	51.05	.330	8.38	.517	13.13	.199	5.05	.394	10.01	1.765	44.8	.355	9.02

Dimensions in Inches (millimeters) are subject to change without notice.

© 2013 Glenair, Inc. U.S. CAGE Code 06324 Printed in U.S.A.

177-705H and 177-706H
MIL-DTL-83513 Type Micro-D Hermetic Connectors
Rear Panel Mount with O-Ring



Fluorosilicone O-Ring eliminates the cost of soldering the connector to a bulkhead.

Kovar® Shells and Contacts comply with applicable MIL-DTL-83513 requirements and are 100% intermateable with standard connectors.

Solder Cup, PC Tail or Pre-Wired and Fully Potted
Suitable for #26 gage wire or smaller, solder cup versions feature gold-plated contacts. Choose PC tails for attachment to flex circuits or rigid boards. Solder cup versions are also available pre-wired and potted.

HOW TO ORDER SOLDER CUP AND PC TAIL CONNECTORS

Series	Layout Number of Contacts	Contact Type	Mounting Threads	O-Ring Material
177-705H Micro-D Hermetic Socket Receptacle, Rear Panel Mount with O-Ring, Solder Cup or PC Tail	**9** **15** **21** **25** **31** **37** **51-2** **51-3** **100**	**SS** – Solder Cup, Socket **SP** – PC Tail, Socket	**U** – #4 - 40 UNC **M** – M3 Metric	**C** = Fluorosilicone, Conductive (Choseal 1298) **E** = Epdm (Ethylene-Propylene) **V** = Viton (Fluorocarbon; Fkm) **N** = Nitrile (Buna-N) **S** = Silicone (ZZ-R-765) **B** = Butyl Rubber (Iir) **K** = Kalrez (Ffkm)
Sample Part Number				
177-705H	**15**	**SS**	**U**	**-V**

HOW TO ORDER PRE-WIRED CONNECTORS

Series	Layout	Contact Type	Wire Gage (AWG)	Wire Type	Wire Color	Wire Length Inches	Mounting Threads	O-Ring Material
177-706H	**9** **15** **21** **25** **31** **37** **51-2** **51-3** **100**	**S** – Socket Contacts Pre-Wired	**6** – #26 **8** – #28 **0** – #30	**K** – M22759/11 600 Vrms Teflon (TFE) (Not Available in #30 AWG) **J** – M22759/33 600 Vrms Modified Cross-Linked Tefzel (ETFE)	**1** – White **2** – Yellow **5** – Color-Coded Stripes Per MIL-STD-681 (#26 gage only) **7** – Ten Color Repeat	**18** **Wire Length In Inches. "18" Specifies 18 Inches.**	M - M3 Metric, Omit for #4-40 UNC	**C** = Fluorosilicone, Conductive **E** = EPDM (Ethylene-Propylene) **V** = Viton (Fluorocarbon; FKM) **N** = Nitrile (BUNA-N) **S** = Silicone (ZZ-R-765) **B** = Butyl Rubber (IIR) **K** = Kalrez (FFKM)
Sample Part Number								
177-706H	**25**	**S**	**6**	**K**	**1**	**– 18**	**M**	**-V**

K

Dimensions in Inches (millimeters) are subject to change without notice.

© 2013 Glenair, Inc.
U.S. CAGE Code 06324
Printed in U.S.A.

177-705H and 177-706H
MIL-DTL-83513 Type Micro-D Hermetic Connectors
Rear Panel Mount with O-Ring

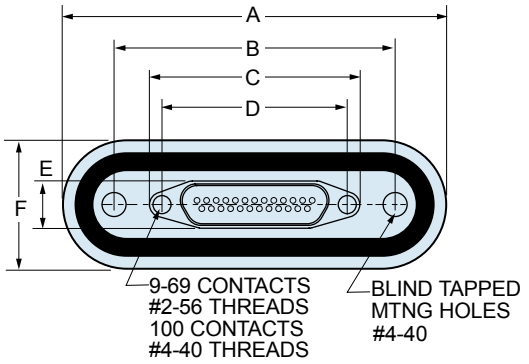

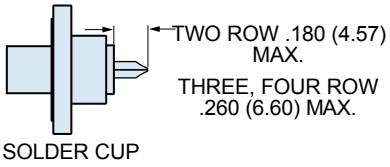

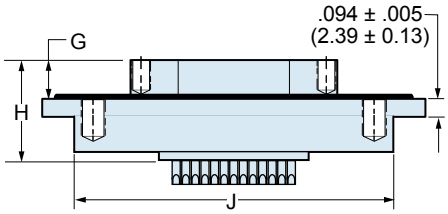

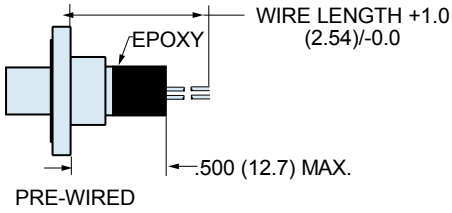

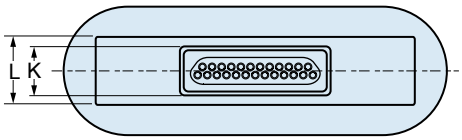

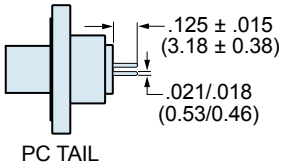

K

DIMENSIONS																						
Layout	A Max.		B		C MAX.		D		E MAX.		F Max.		G		H Max.		J		K		L Max.	
	In.	mm.	In. ± .005	mm. ±0.13	In.	mm.	In. ± .003	mm. ±0.08	In.	mm.	In.	mm.	In. ± .004	mm. ±0.10	In.	mm.	In.	mm.	In. ± .004	mm. ±0.10	In.	mm.
9S	1.488	37.80	1.011	25.67	.728	18.49	.565	14.35	.250	6.35	.675	17.14	.195	4.95	.526	13.36	1.254	31.85	.257	6.89	.358	9.09
15S	1.638	41.61	1.161	29.48	.878	22.30	.715	18.16	.250	6.35	.675	17.14	.195	4.95	.526	13.36	1.414	36.91	.257	6.89	.358	9.09
21S	1.788	45.42	1.311	33.29	1.028	32.51	.865	21.97	.250	6.35	.675	17.14	.195	4.95	.526	13.36	1.564	39.72	.257	6.89	.358	9.09
25S	1.888	47.96	1.411	35.83	1.128	28.65	.965	24.51	.250	6.35	.675	17.14	.195	4.95	.526	13.36	1.664	42.26	.257	6.89	.358	9.09
31S	2.038	51.76	1.561	39.64	1.278	32.46	1.115	28.32	.250	6.35	.675	17.14	.195	4.95	.526	13.36	1.814	46.07	.257	6.89	.358	9.09
37S	2.188	55.57	1.711	43.45	1.428	36.27	1.265	32.13	.250	6.35	.675	17.14	.195	4.95	.526	13.36	1.984	50.39	.257	6.89	.358	9.09
51S 2 Row	2.538	64.47	2.061	52.35	1.778	45.16	1.615	41.02	.250	6.35	.675	17.14	.195	4.95	.526	13.36	2.334	59.28	.257	6.89	.358	9.09
51S 3 Row	2.138	54.30	1.661	42.19	1.378	35.00	1.215	30.86	.310	7.87	.715	18.16	.195	4.95	.526	13.36	1.920	48.77	.257	6.89	.358	9.09
100S	2.820	71.63	2.312	58.72	2.002	50.85	1.800	45.72	.330	8.38	.795	20.19	.195	4.95	.599	15.21	2.569	65.25	.257	6.89	.358	9.09

Dimensions in Inches (millimeters) are subject to change without notice.

© 2013 Glenair, Inc.
U.S. CAGE Code 06324
Printed in U.S.A.

PANEL CUTOUT DIMENSIONS FOR 177-705 AND 177-706

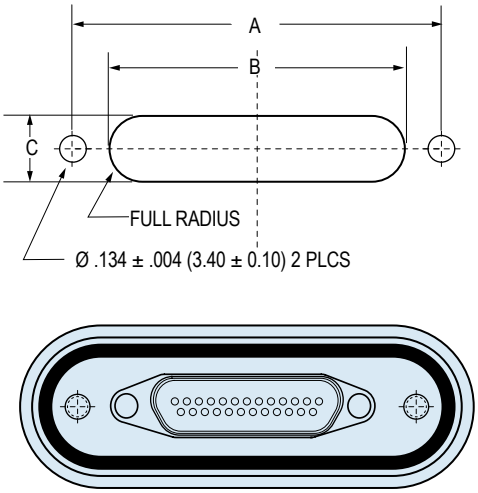

Layout	A		B		C	
	In. ± .003	mm. ± 0.08	In. +.005 / -0.0	mm. + 0.13 / -0.0	In. + .005/ -0.0	mm. + 0.13/ -0.0
9	1.011	25.69	.731	18.56	.252	6.40
15	1.161	29.50	.881	22.37	.252	6.40
21	1.311	33.31	1.031	26.18	.252	6.40
25	1.411	35.85	1.131	28.72	.252	6.40
31	1.561	39.66	1.281	32.53	.252	6.40
37	1.711	43.47	1.431	36.34	.252	6.40
51 2 row	2.061	52.35	1.781	45.24	.252	6.40
51 3 row	1.661	42.19	1.381	35.08	.310	7.87
100	2.312	58.72	2.005	50.93	.330	8.38

Dimensions in Inches (millimeters) are subject to change without notice.

© 2013 Glenair, Inc.
U.S. CAGE Code 06324
Printed in U.S.A.

177-232
MIL-DTL-83513 Type Micro-D Hermetic Connectors
Socket Shell, Size 37 Front Mount

Conductive Elastomer O-Ring eliminates the cost of soldering the connector to a bulkhead.

Kovar® Shells and Contacts comply with applicable MIL-DTL-83513 requirements and are 100% intermateable with standard connectors.

HOW TO ORDER PC TAIL CONNECTORS
Series
177-232 Micro-D Hermetic Socket Shell, Size 37, Front Mount
Sample Part Number
177-232

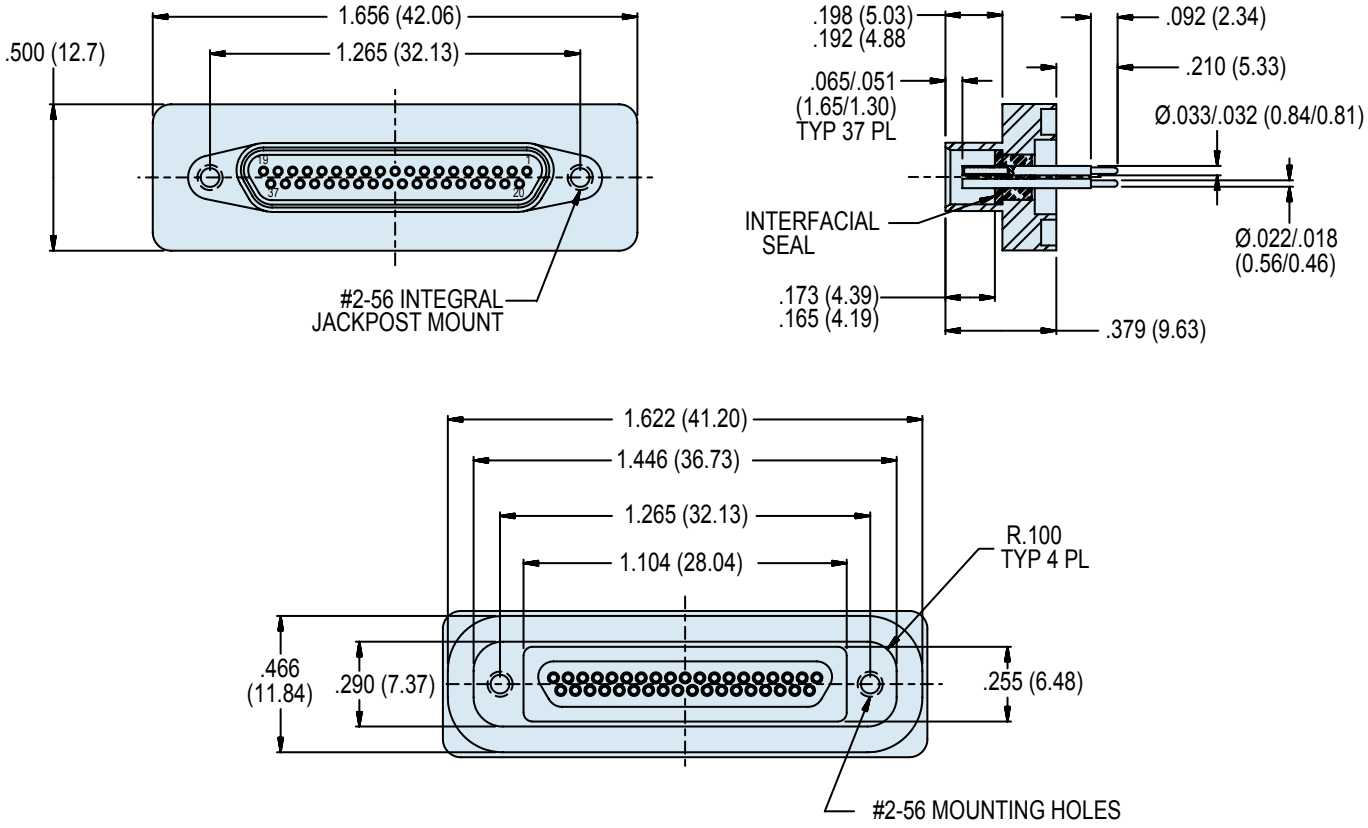

Dimensions in Inches (millimeters) are subject to change without notice.

© 2013 Glenair, Inc. U.S. CAGE Code 06324 Printed in U.S.A.

177-859
MIL-DTL-83513 Type Micro-D Hermetic Connectors
Socket Shell, Size 9-21 Front Mount



Fluorosilicone O-Ring eliminates the cost of soldering the connector to a bulkhead.

Kovar® Shells and Contacts comply with applicable MIL-DTL-83513 requirements and are 100% intermateable with standard connectors.

DIMENSIONS

Layout	A Max.		B		C MAX.		D		E MAX.		F Max.	
	In.	mm.	In. ± .005	mm. ±0.13	In.	mm.	In. ± .003	mm. ±0.08	In.	mm.	In.	mm.
9	1.176	29.87	.565	14.35	.380	9.65	.600	15.24	.776	19.71	.976	24.79
15	1.326	31.39	.715	18.16	.530	13.46	.750	19.05	.926	23.52	1.126	28.60
21	1.416	35.97	.865	21.97	.680	17.27	.840	21.34	1.016	25.81	1.216	30.89

HOW TO ORDER SOLDER CUP CONNECTORS

Series	Layout Number of Contacts	O-Ring Material
177-859 Micro-D Hermetic Socket Shell, Size 9-12, Front Mount	**-9** **-15** **-21**	**-1** – Viton® **-2** – Nitrile **-3** – Flourosilicone **-4** – Silicone **-5** – Conductive
Sample Part Number		
177-859	**-15**	**-1**

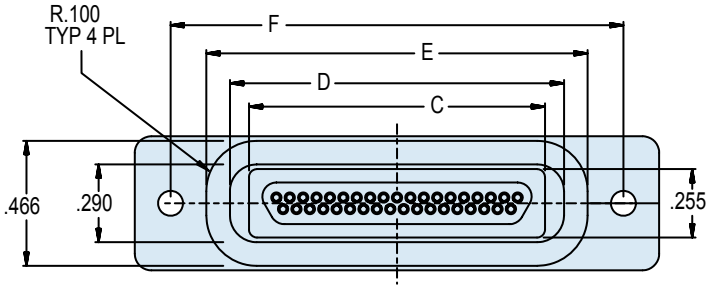

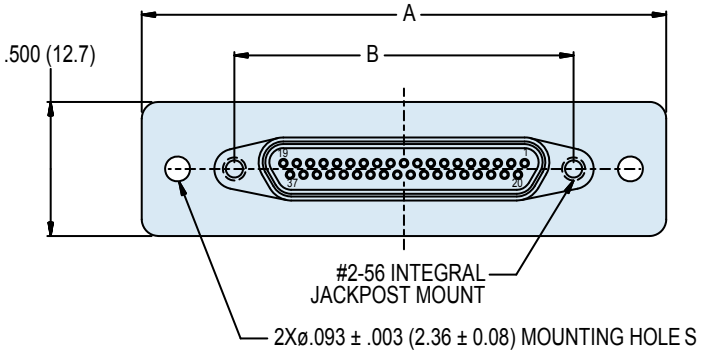

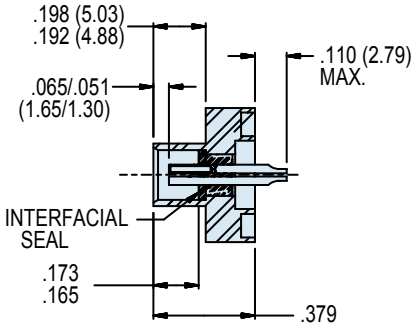

Dimensions in Inches (millimeters) are subject to change without notice.

© 2013 Glenair, Inc. U.S. CAGE Code 06324 Printed in U.S.A.

SERIES 79

MICRO-CRIMP™

Glass Sealed Hermetic Connectors

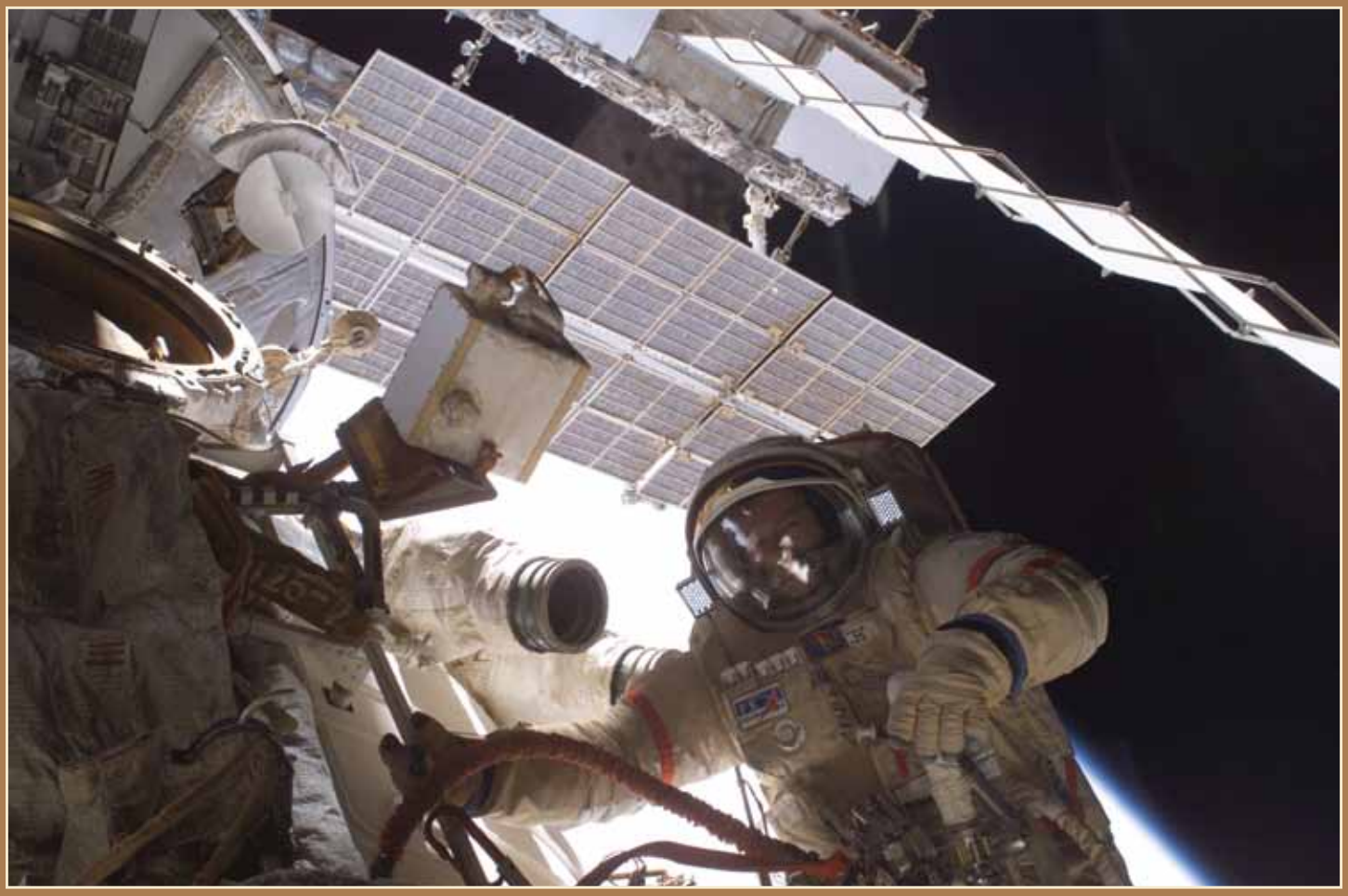

Meet the newest member of Glenair's ultraminiature connector family, the Series 79 Micro-Crimp. Enviromental versions of the Micro-Crimp feature crimp, rear-release size #23 contacts on .075 inch (1.9 mm) spacing, as well as size #12 and #16 power and coaxial crimp contacts in a range of hybrid layouts. Hermetic versions of these high contact density connectors also feature .050 inch contact spacing, rugged construction for demanding applications and, of course glass–to–metal hermetic sealing for severe environmental and pressure differential operating conditions. Designed for use in vacuum chambers and other pressurized systems, Glenair Micro-Crimp Hermetic Connectors offer outstanding performance in a lightweight microminiature package. The two basic mounting configurations, a weld-mount or O-Ring mount design may be customized for unique application environments.

MICRO crimp™

Glenair, Inc.
1211 Air Way
Glendale, CA
91201-2497
818-247-6000
sales@glenair.com
www.glenair.com

The Hermetic Micro-D Connector with Crimp Contacts

Glenair Series 79 Micro-Crimp Hermetic Connectors are socket receptacles with matched glass to metal seals, plus potted epoxy solutions. Rated to 1000 PSI, 1.5 AMP, 150 Volts AC, they are offered with 9 through 100 contacts, weld mount or O-Ring mount with integral jackposts. Solder cup versions for #26 gauge wire, PC tail versions, and special contacts for wire bonding are also available.

Quick Selection Guide

Part Number	Description	Page
	Series 79 Micro-Crimp Hermetic Connectors General Information	L-2
	Series 79 Micro-Crimp Recommended Panel Cutouts	L-3
	Series 79 Micro-Crimp Insert Arrangements	L-5
	Series 79 Micro-Crimp Connectors for Space Flight	L-8
790-066	Hermetic Rear Panel Mount Receptacle, Pin Face, Solder Cup Contacts	L-9
797-077	Hermetic Receptacle, E-11P2 Arrangement	L-14
797-087	Hermetic Receptacle, Pin Contacts with P.C. Tails, Size H-66 Only	L-15
797-204	Hermetic Receptacle, Pre-Wired Pin Contacts, Shell Size G-33	L-17
797-216	Rectangular Hemetic Receptacle Connector 9 X Coax Contacts	L-19

© 2013 Glenair, Inc.
CAGE CODE 06324
Printed in U.S.A.

GLENAIR, INC. • 1211 AIR WAY • GLENDALE, CA 91201-2497 • 818-247-6000 • FAX 818-500-9912
www.glenair.com

E-Mail: sales@glenair.com

Glenair®

Series 79
Micro-Crimp Hermetic Connectors
General Information

The High-Density, High Performance Hermetic Rectangular

Meet the newest member of Glenair's ultraminiature connector family, the Series 79 Micro-Crimp. Enviromental versions of the Micro-Crimp feature crimp, rear-release size #23 contacts on .075 inch (1.9 mm) spacing, as well as size #12 and #16 power and coaxial crimp contacts in a range of hybrid layouts. Hermetic versions of these high contact density connectors also feature .050 inch contact spacing, rugged construction for demanding applications and, of course glass–to–metal hermetic sealing for severe environmental and pressure differential operating conditions. Designed for use in vacuum chambers and other pressurized systems, Glenair Micro-Crimp Hermetic Connectors offer outstanding performance in a lightweight microminiature package. The basic mounting configuration, an O-Ring equipped rear panel mount design may be customized for unique application environments. Specials, including weld mount versions are also available

MICRO crimp™

- Socket Receptacles
- Matched, Glass to Metal Seals
- 1,000 PSI
- 9 through 100 Contacts
- Weld Mount or O-Ring Mount; Integral Jackposts
- 1.5 AMP; 150 Volt AC
- Solder Cup (#26 Gage Wire), PC Tails, and Special Contacts for Wire Bonding

Hermetic Micro-Crimp solutions available in a broad range of insert arrangements, from two to 102 contacts.



© 2013 Glenair, Inc.

Series 79 Micro-Crimp Recommended Panel Cut-Outs

ALL CUTOUTS FOR .063" (.070 MAX) THICK PANEL MOUNTING

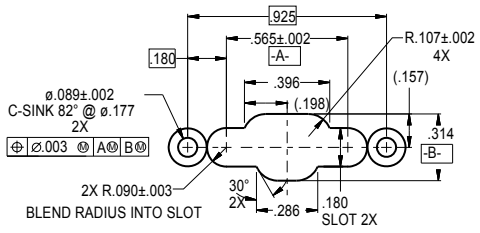

Shell Size A

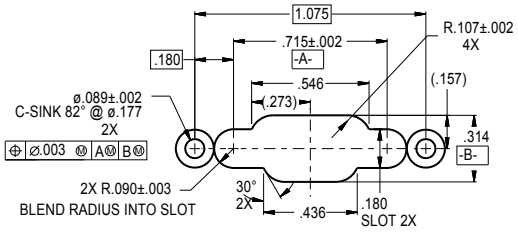

Shell Size B

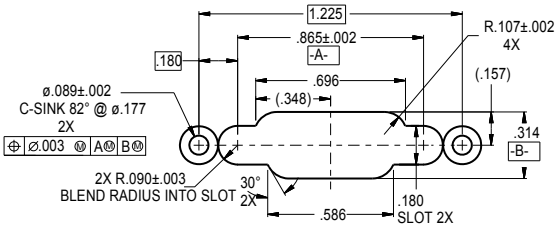

Shell Size C

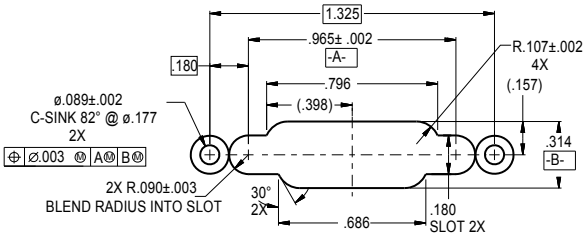

Shell Size D

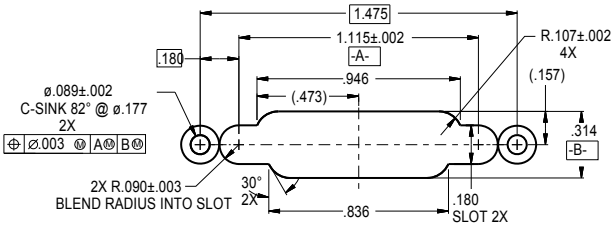

Shell Size E

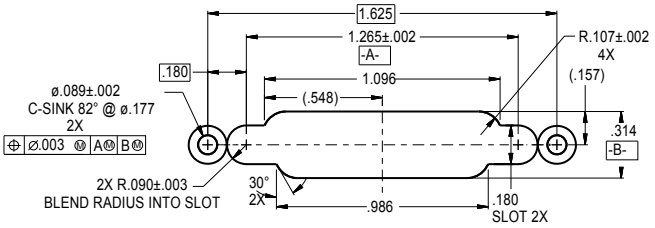

Shell Size F

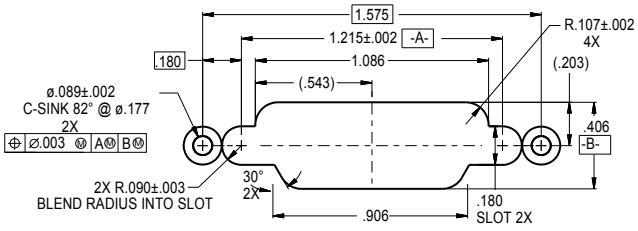

Shell Size G

© 2013 Glenair, Inc.

Series 79 Micro-Crimp Recommended Panel Cut-Outs

ALL CUTOUTS FOR .063" (.070 MAX) THICK PANEL MOUNTING

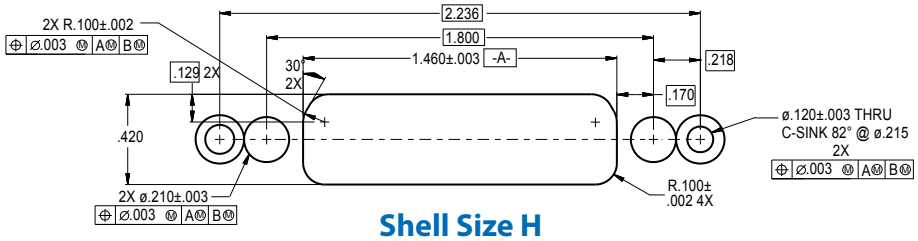

Shell Size H

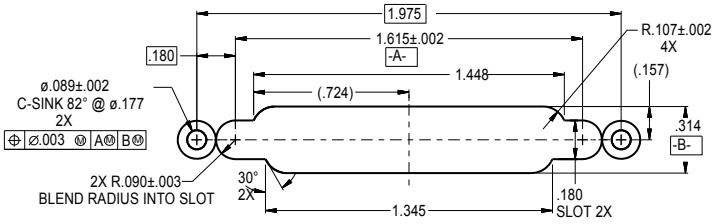

Shell Size J

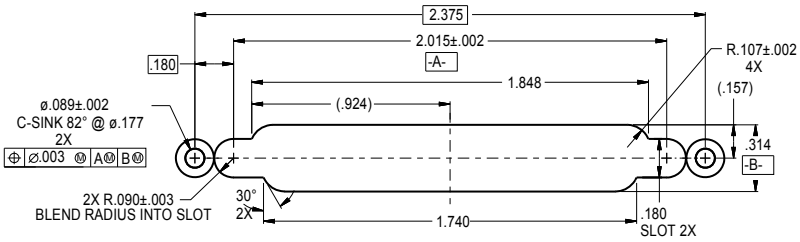

Shell Size K

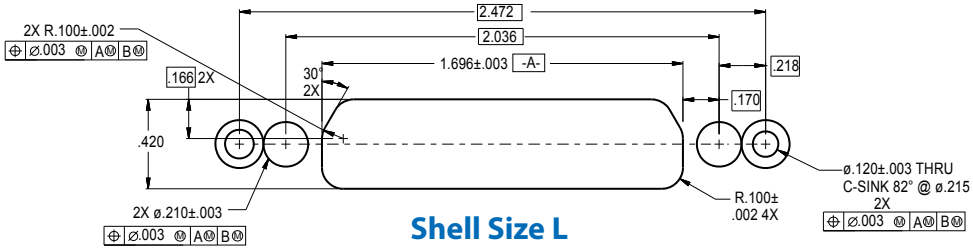

Shell Size L

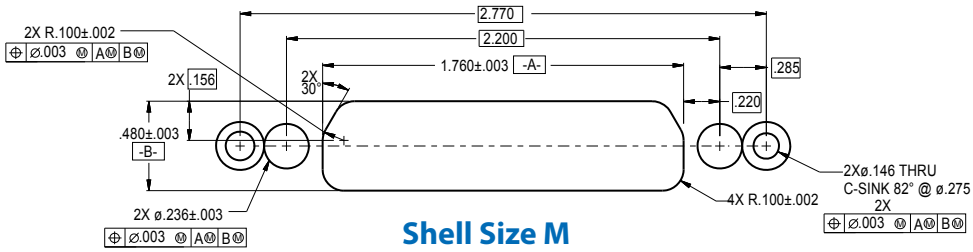

Shell Size M

© 2013 Glenair, Inc.

MICRO-CRIMP INSERT ARRANGEMENTS

Shell Size	Contact Arrangement	No. of Contacts and Contact Size	Mating Face Pin Connector (Socket Numbers are Reversed)
A	A-5	5 #23 CONTACTS	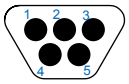
B	B-2P2 B-2W2	2 #16 CONTACTS	
B	B-9	9 #23 CONTACTS	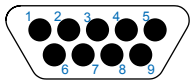
C	C-13	13 #23 CONTACTS	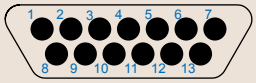
D	D-15	15 #23 CONTACTS	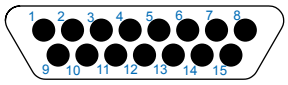
D	D-3P3 D-3W3	3 #16 CONTACTS	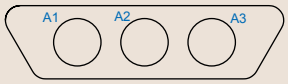
D	D-7P2 D-7W2	5 #23 CONTACTS 2 #16 CONTACTS	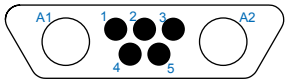
E	E-11P2 E-11W2	9 #23 CONTACTS 2 #16 CONTACTS	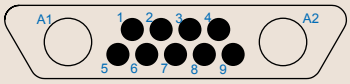
E	E-19	19 #23 CONTACTS	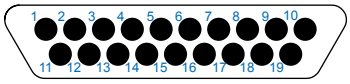
E	E-7P3	4 #23 CONTACTS 3 #16 CONTACTS	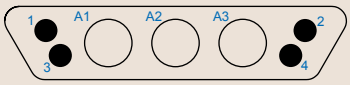
F	F-15P2 F-15W2	13 #23 CONTACTS 2 #16 CONTACTS	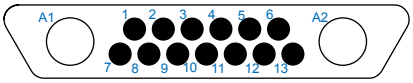
F	F-23	23 #23 CONTACTS	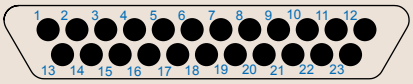
F	F-5P5 F-5W5	5 #16 CONTACTS	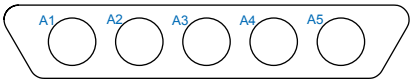
G	G-33	33 #23 CONTACTS	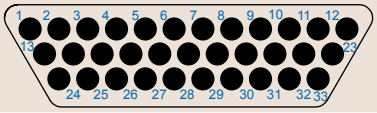

L

© 2013 Glenair, Inc.

Series 79
Micro-Crimp Hermetic Connectors
Insert Arrangements

MICRO-CRIMP INSERT ARRANGEMENTS

Shell Size	Contact Arrangement	No. of Contacts and Contact Size	Mating Face Pin Connector (Socket Numbers are Reversed)
H	H-10P4 H-10W4	6 #23 CONTACTS 4 #12 CONTACTS	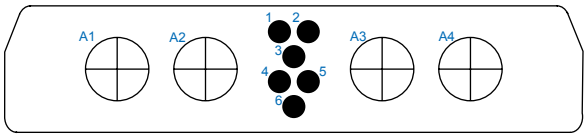
H	H-29P7	22 #23 CONTACTS 7 #16 CONTACTS	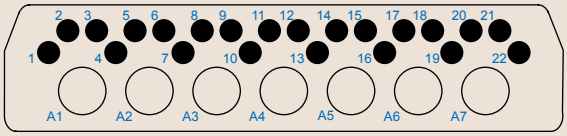
H	H-36P2 H-36W2	34 #23 CONTACTS 2 #12 CONTACTS	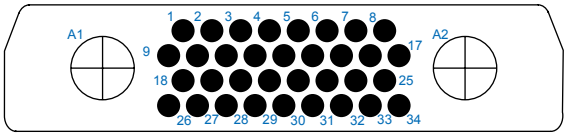
H	H-54P2 H-54W2	52 #23 CONTACTS 2 #16 CONTACTS	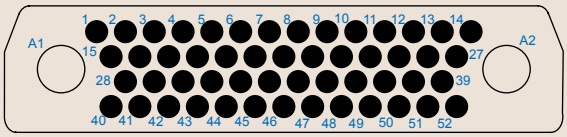
H	H-5P5 H-5W5	5 #12 CONTACTS	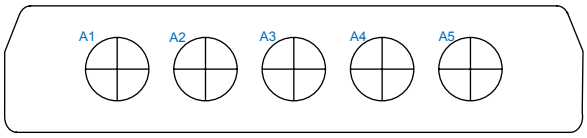
H	H-66	66 #23 CONTACTS	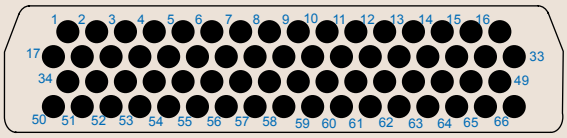
J	J-17P4 J-17W4	13 #23 CONTACTS 4 #16 CONTACTS	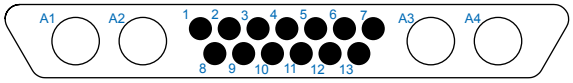

© 2013 Glenair, Inc.

MICRO-CRIMP INSERT ARRANGEMENTS

Shell Size	Contact Arrangement	No. of Contacts and Contact Size	Mating Face Pin Connector (Socket Numbers are Reversed)
J	J-25P2 J-25W2	23 #23 CONTACTS 2 #16 CONTACTS	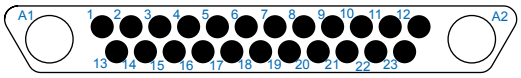
J	J-33	33 #23 CONTACTS	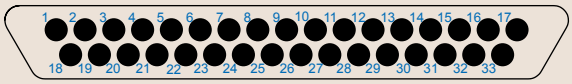
J	J-7P7 J-7W7	7 #16 CONTACTS	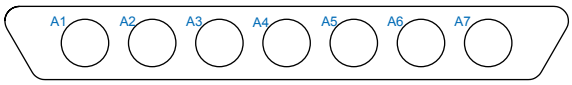
K	K-27P4 K-27W4	23 #23 CONTACTS 4 #16 CONTACTS	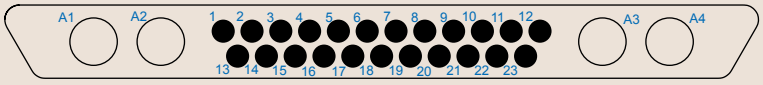
K	K-35P2 K-35W2	33 #23 CONTACTS 2 #16 CONTACTS	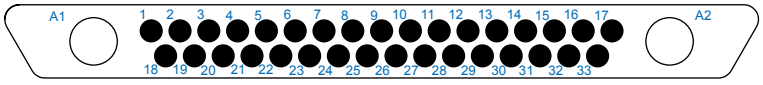
K	K-43	43 #23 CONTACTS	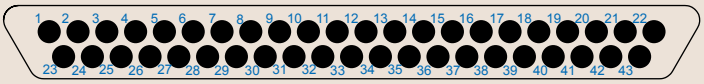
K	K-9P9 K-9W9	9 #16 CONTACTS	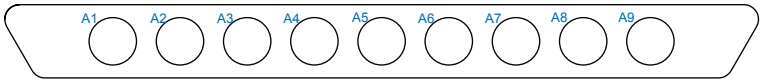
L	L-6P6 L-6W6	6 #12 CONTACTS	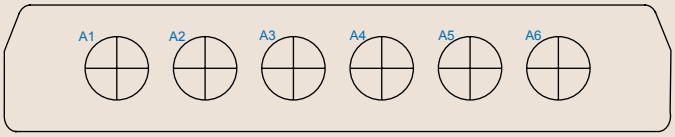
L	L-78	78 #23 CONTACTS	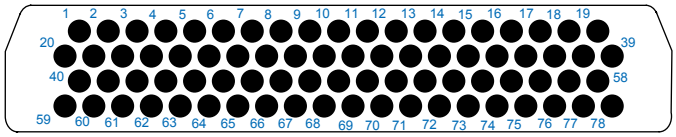
M	M-102	102 #23 CONTACTS	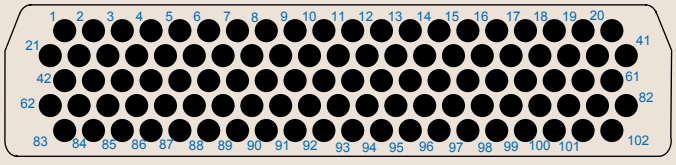

© 2013 Glenair, Inc.

Glenair®

Series 79
Micro-Crimp Hermetic Connectors
for Space Flight

Series 79 Micro-Crimp Connectors for Space Flight



Micro-D connectors are a popular choice for space flight. Their small size and reduced weight, combined with excellent shock and vibration performance, has led to their widespread use on space vehicles. The Micro-Crimp connector brings the benefits of a crimp, rear-release contact system to the Glenair Micro-D family. Connectors can be terminated onto complicated, multi-branch wiring harnesses without splicing or soldering.

Five things you should know about Series 79 connectors for space flight

***1 Material Selection:** What materials are approved for space-grade connectors? What materials are prohibited? Does the Series 79 connector contain space-approved materials?*

***2 Outgassing:** What is outgassing, why is it important, and how does it affect connector selection? Is special processing required to meet outgassing requirements?*

***3 Screening:** What is NASA screening and what level of screening is required?*

***4 Magnetic permeability:** Are nonmagnetic connectors required?*

***5 Cryogenic exposure:** Are these connectors suitable for -200° C. exposure?*

L

HOW TO ORDER SPACE GRADE SERIES 79 CONNECTORS

Step 1: Find a Standard Part Number

Electroless nickel plated shells are preferred for space flight. Cadmium plating is prohibited.

Step 2: Select a NASA Screening Level

The term “Screening Level” refers to the final inspection procedure.
Level 1 for mission-critical highest reliability
Level 2 for high reliability
Level 3 for standard reliability

Step 3: Choose Outgassing Processing

A detailed explanation of outgassing is on the following pages. The fluorosilicone rubber seals commonly used on aerospace-grade connectors such as MIL-DTL-38999 and Series 79 connectors, along with certain bonding agents and inks, do not meet NASA outgassing requirements unless the connector is specially processed. Glenair outgassing tests have shown oven baking or thermal vacuum outgassing processing are sufficient to reduce outgassing levels to NASA standards. Oven baking is more economical than thermal vacuum outgassing.

Step 4: Select the Mod 429 Code that Matches the Desired Level of Screening and Outgassing

Use the following table to choose the right modification code. Add the mod code to the connector part number. Example: 790-066Z1K-9P9N-***429C***

NASA SCREENING LEVELS AND MODIFICATION CODES

NASA Screening Level	Special Screening Only		Special Screening Plus Outgassing Processing	
	Interfacial Seal is Installed	Interfacial Seal is Deleted	8 Hour Oven Bake 400° F.	Thermal Vacuum Outgassing 24 hrs. 125° C.
Level 1 Highest Reliability	Mod 429B	Mod 429F	Mod 429J	Mod 429C
Level 2 High Reliability	Mod 429	Mod 429D	Mod 429K	Mod 429A
Level 3 Standard Reliability	(Use standard part no.)	Mod 432	Mod 186	Mod 186M

© 2013 Glenair, Inc.

Basic Part Number: 790-066

Shell Size: Z1 — *Table I, Page L-11*

Mating Hardware Option
- *N = No Hardware*
- *P = Jackpost*
- *G = Male Guide Pins*
- *S = Female Guide Sockets*

See Page L-12

Finish
- *Z1 = Passivate*
- *ZL = Nickel Plate*

Arrangement: K - 9P9 — *See Page L-5 (Pin with Solder Cup Only)*

Mating Hardware Option: N

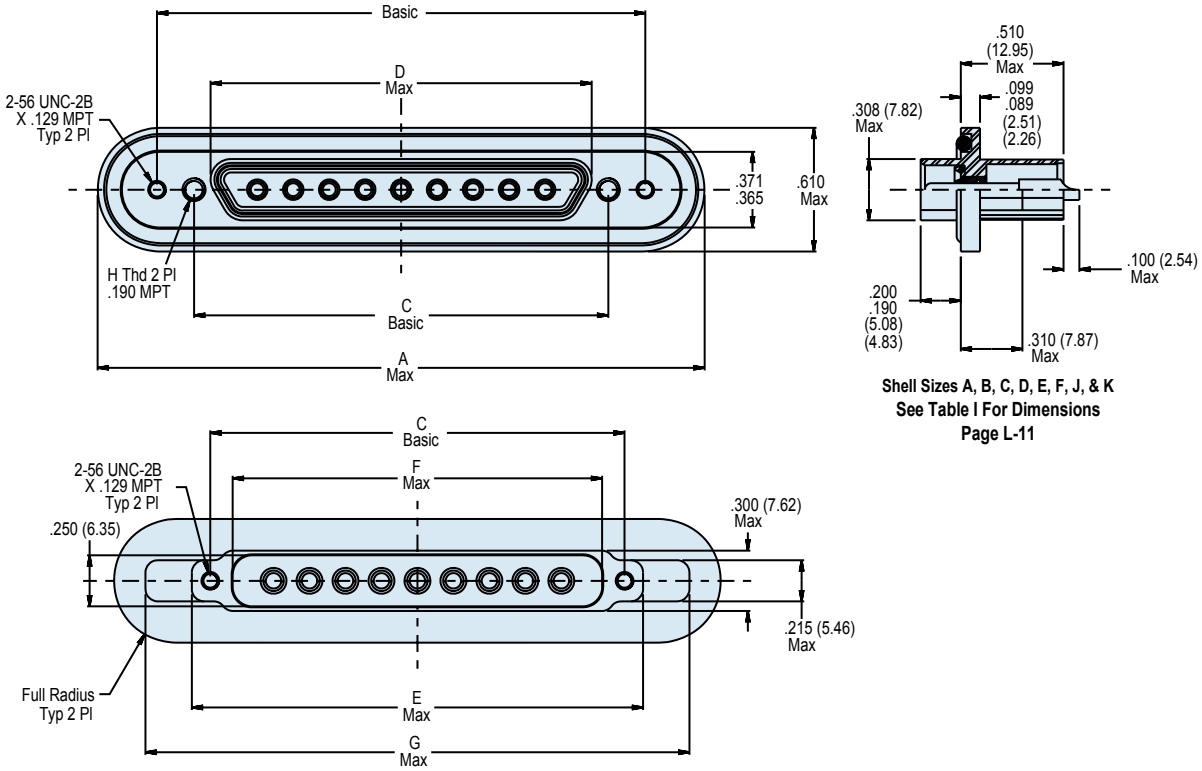

Shell Sizes A, B, C, D, E, F, J, & K
See Table I For Dimensions
Page L-11

APPLICATION NOTES

1. Material/Finish:
   Shell* - 300 Series CRES/passivate or
   300 Series CRES/Nickel Plate
   Contacts - Nickel iron alloy/gold plate
   Insulator - Individual glass beads/N.A.
   Seals - Fluorosilicone blend/N.A.
   Mating Hardware - CRES/passivated
   *Consult factory for other shell finishes and O-Ring materials.
2. Metric dimensions (mm) are indicated in parentheses.
3. See Pages L-3 and L-4 for panel cut-out information.
4. Test Criteria:
   Hermeticity - <1 x 10^{-7} scc He/sec @1 ATM Delta
   DWV - #23 pins: 500 VAC pin-to-shell
   #16 pins: 1000 VAC pin-to-shell
   #12 pins: 1000 VAC pin-to-shell
   I.R. - 5,000 megohms minimum @500 VDC
5. Glenair 790-066 will mate with any series 79 plug with socket contacts and same shell and insert, and is designed to utilize 799-016 EMI backshells.

© 2013 Glenair, Inc. CAGE CODE 06324 Printed in U.S.A.

790-066
Series 79 Micro-Crimp Rear Panel Mount
Hermetic Receptacle, Pin Face with Solder Cups

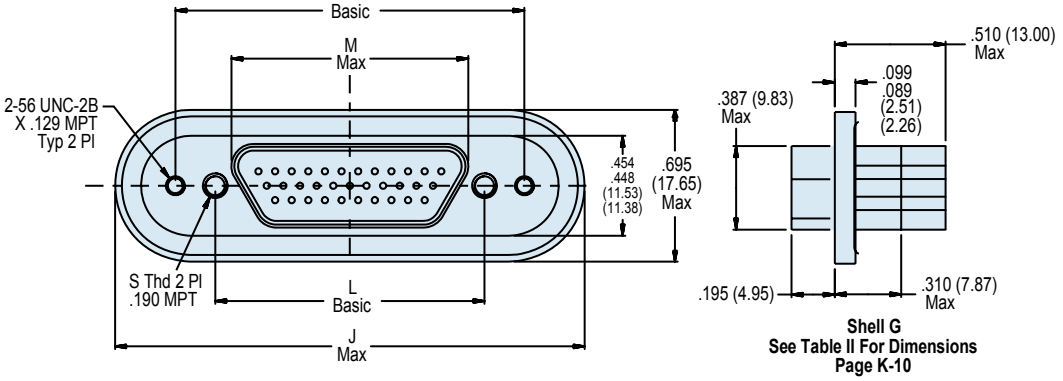

Shell G
See Table II For Dimensions
Page K-10

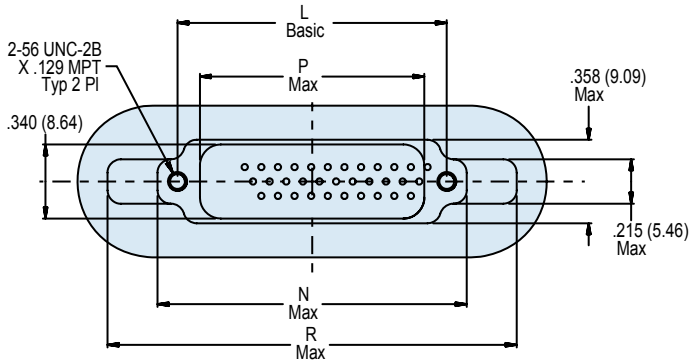

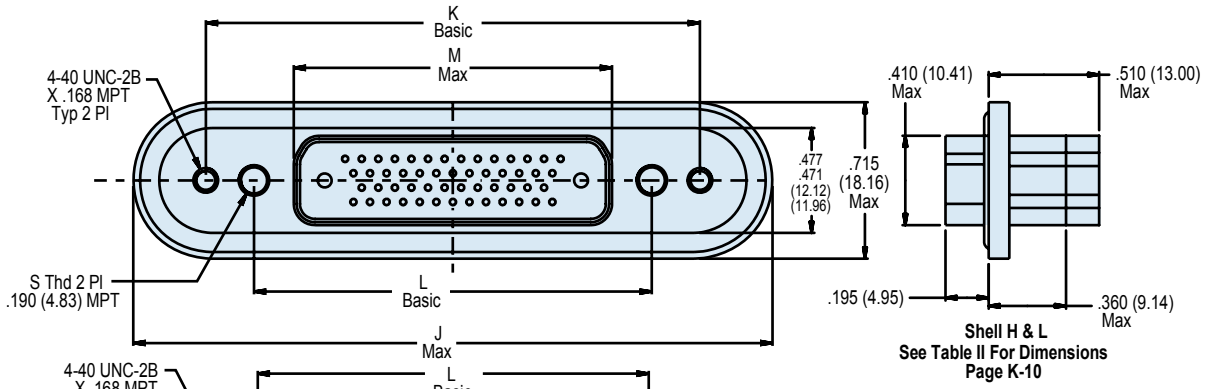

Shell H & L
See Table II For Dimensions
Page K-10

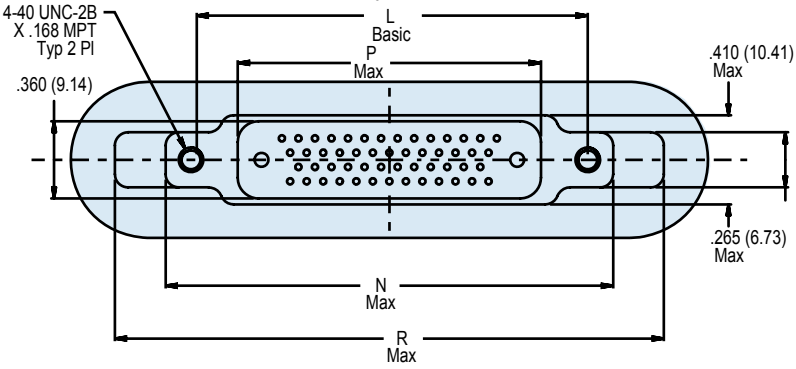

© 2013 Glenair, Inc.

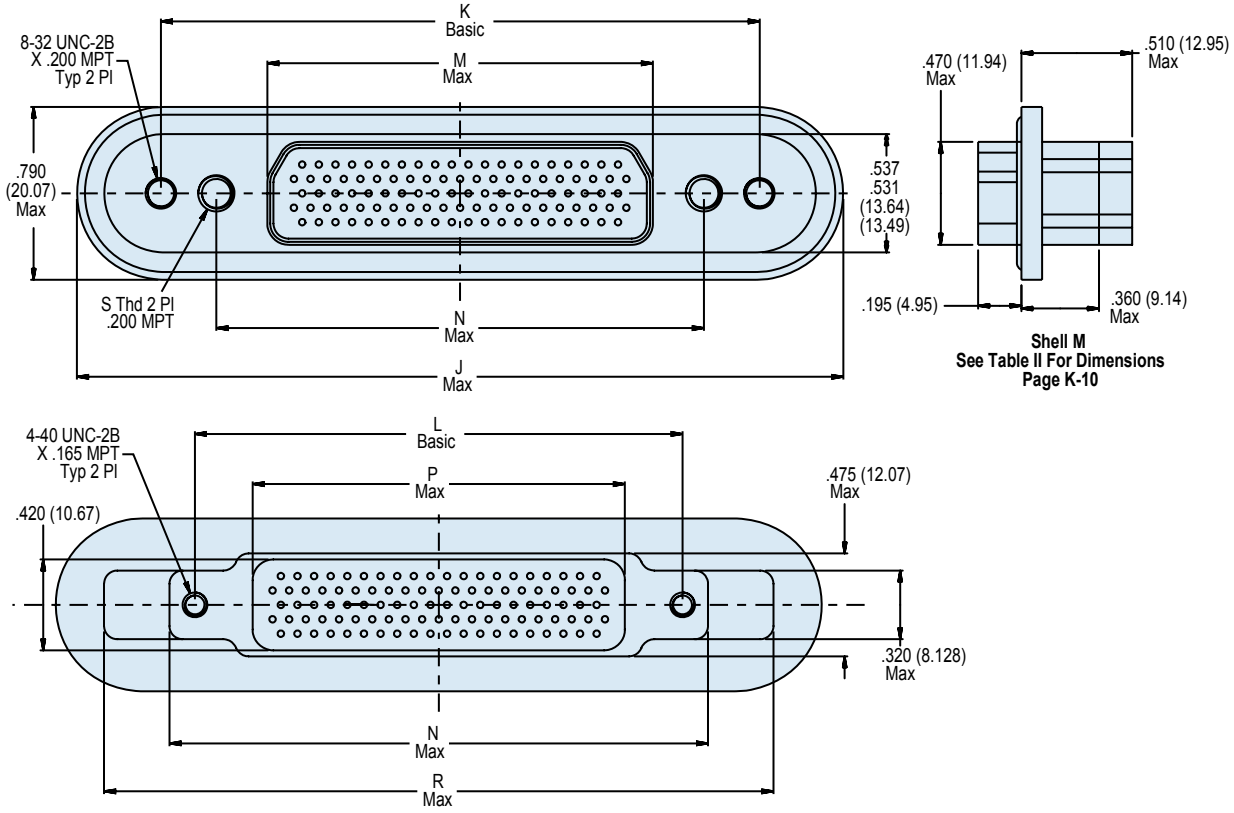

TABLE I: CONNECTOR DIMENSIONS								
Shell Size	A DAL	B BASIC	C BASIC	D MAX	E MAX	F MAX	G MAX	H TYP UNC 2-B
A	1.490 (37.85)	.925 (23.50)	.565 (14.35)	.401 (10.19)	.750 (19.05)	.350 (8.89)	1.215 (30.86)	#4-40
B	1.680 (42.67)	1.075 (27.31)	.715 (18.16)	.551 (14.00)	.910 (23.11)	.500 (12.70	1.365 (34.67)	#4-40
C	1.785 (45.34)	1.225 (31.12)	.865 (21.97)	.701 (17.81)	1.060 (26.92)	.650 (16.51)	1.515 (38.48)	#4-40
D	1.975 (50.17)	1.325 (33.66)	.965 (24.51)	.801 (20.35)	1.160 (29.46)	.750 (19.05)	1.615 (41.02)	#4-40
E	2.075 (52.71)	1.475 (37.47)	1.115 (28.32)	.951 (24.16)	1.310 (33.27)	.900 (22.86)	1.765 (44.83)	#4-40
F	2.175 (55.25)	1.625 (41.28)	1.265 (32.13)	1.101 (27.97)	1.460 (37.08)	1.050 (26.67)	1.915 (48.64)	#4-40
J	2.665 (67.69)	1.975 (50.17)	1.615 (41.02)	1.460 (37.08)	1.810 (45.97)	1.405 (35.69)	2.265 (57.53)	#4-40
K	2.960 (75.18)	2.375 (60.33)	2.015 (51.18)	1.860 (47.24)	2.210 (56.13)	1.805 (45.85)	2.665 (67.69)	#4-40

TABLE II: CONNECTOR DIMENSIONS								
Shell Size	J DAL	K BASIC	L BASIC	M MAX	N MAX	P MAX	R MAX	S TYP UNC 2-B
G	2.130 (54.10)	1.575 (40.01)	1.215 (30.86)	1.079 (27.41)	1.410 (35.81)	1.020 (25.91)	1.961 (49.81)	#4-40
H	2.900 (73.66)	2.236 (56.79)	1.800 (45.72)	1.450 (36.83)	2.045 (51.94)	1.385 (35.18)	2.500 (63.50)	#6-32
L	3.100 (78.74)	2.472 (62.79)	2.036 (51.74)	1.686 (42.82)	2.281 (57.94)	1.625 (41.28)	2.736 (69.49)	#6-32
M	3.475 (88.27)	2.700 (68.58)	2.000 (50.80)	1.745 (44.32)	2.485 (63.12)	1.690 (42.93)	3.085 (78.36)	#6-32

© 2013 Glenair, Inc.

790-066
Series 79 Micro-Crimp Rear Panel Mount
Hermetic Receptacle, Pin Face with Solder Cups

TABLE III: CONNECTOR DIMENSIONS				
Shell Size	AA BASIC	BB ±.002 (0.05)	CC ±.005 (0.13)	DD ±.005 (0.13)
A	.925 (23.50)	.565 (14.35)	.396 (10.06)	.286 (7.26)
B	1.075 (27.31)	.715 (18.16)	.546 (13.87)	.436 (11.07)
C	1.225 (31.12)	.865 (21.97)	.696 (17.68)	.586 (14.88)
D	1.325 (33.66)	.965 (24.51)	.796 (20.22)	.686 (17.42)
E	1.475 (37.47)	1.115 (28.32)	.946 (24.03)	.836 (21.23)
F	1.625 (41.28)	1.265 (32.13)	1.096 (27.84)	.986 (25.04)
J	1.975 (50.17)	1.615 (41.02)	1.448 (36.78)	1.345 (35.16)
K	2.375 (60.33)	2.015 (51.18)	1.848 (46.94)	1.740 (44.20)

P Jackpost	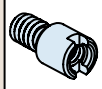	Connector Supplied With Non-removable Jackpost. Shell Size "M" Has 6-32-unc Thread. Shell Sizes "H" And "L" Have 4-40 UNC-2B Thread. All Other Sizes Have 2-56 UNC-2B Thread.
G Guide Pin	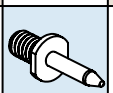	Connector Supplied With Non-removable Guide Pins For Blind Mate Applications. Mates With Option "S" Guide Socket On Corresponding Plug Connector.
S Guide Socket	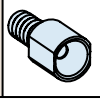	Connector Supplied With Non-removable Guide Sockets For Blind Mate Applications. Mates With Option "G" Guide Pin On Corresponding Plug Connector.

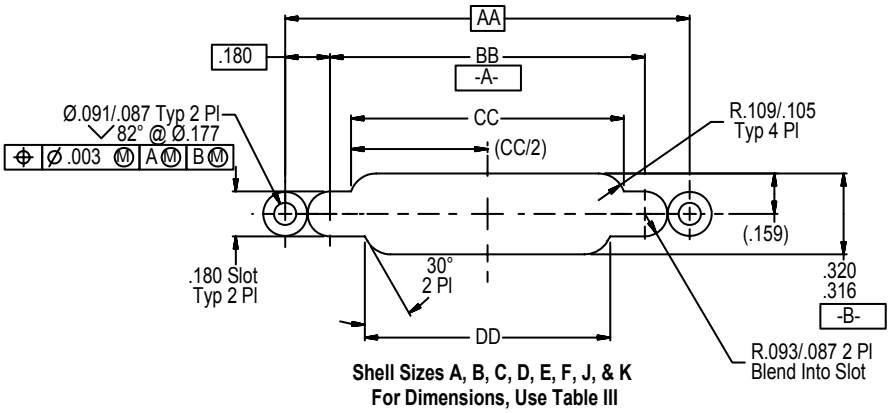

Shell Sizes A, B, C, D, E, F, J, & K
For Dimensions, Use Table III

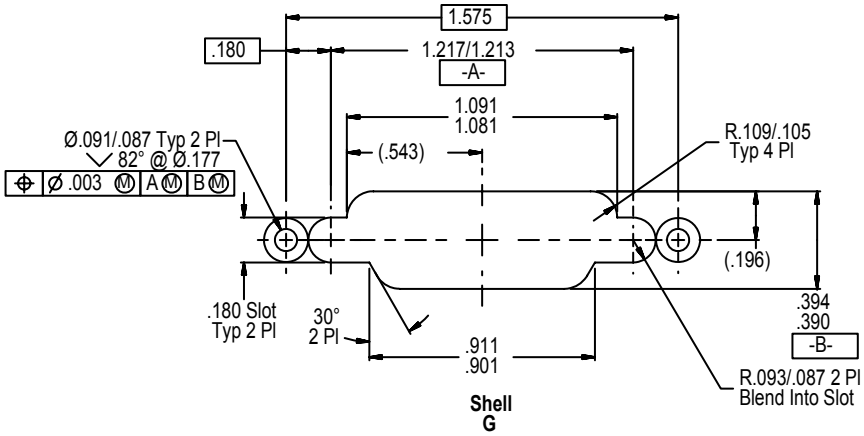

Shell G

© 2013 Glenair, Inc.

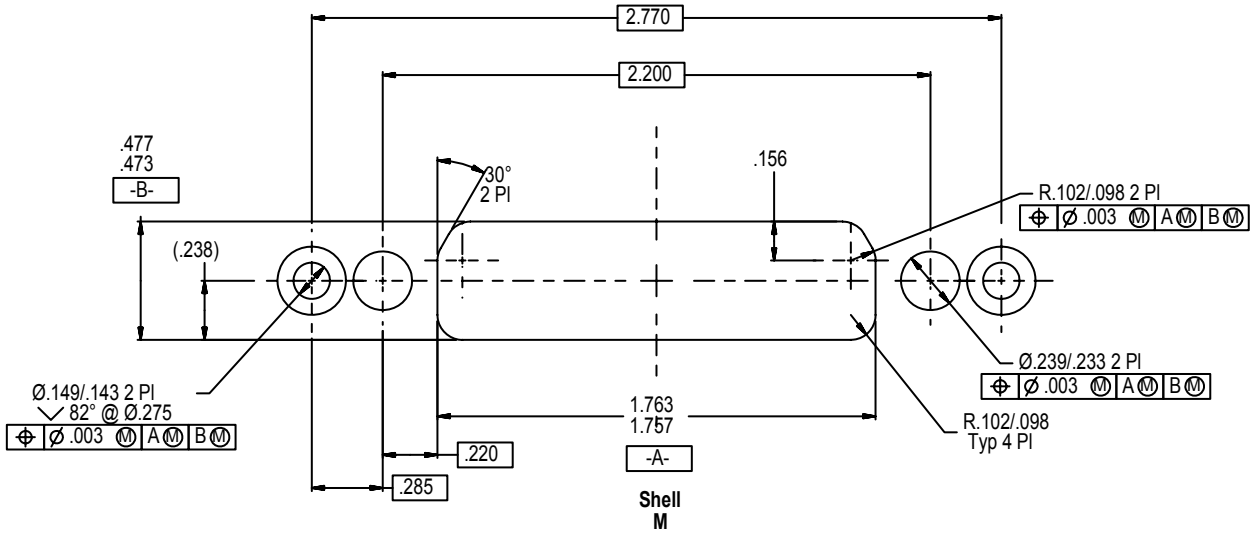

Shell
M

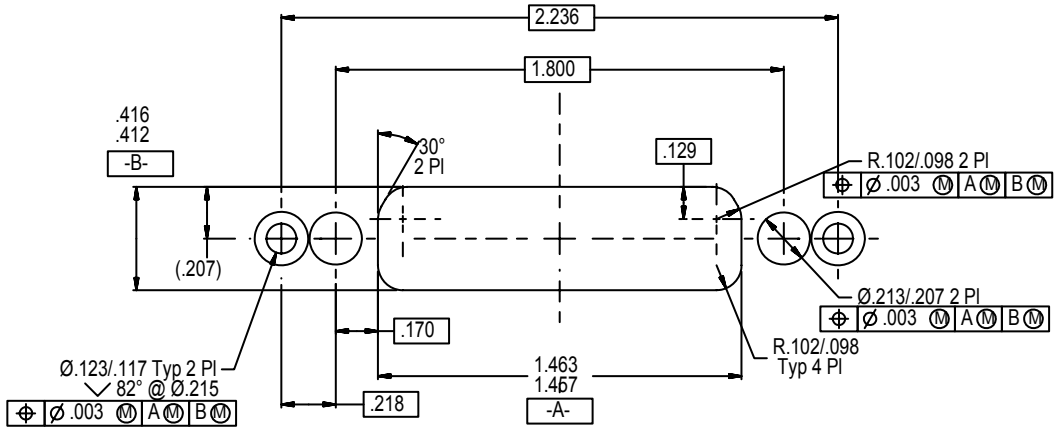

Shell
H

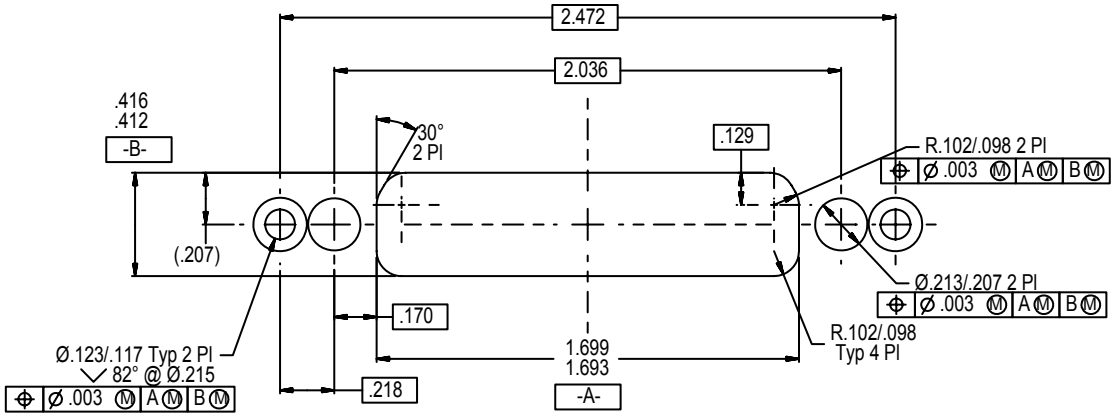

Shell
L

© 2013 Glenair, Inc.

797-077
Series 79 Micro-Crimp Hermetic Receptacle
E-11P2 Arrangement

Basic Part Number	Shell Size		Arrangement	Mating Hardware Option
797-077	Z1	E -	11P2	N

Finish
Z1 = Passivate
ZL = Nickel Plate

Mating Hardware Option
N = No Hardware
P = Jackpost
G = Male Guide Pins
S = Female Guide Sockets
See Page L-12

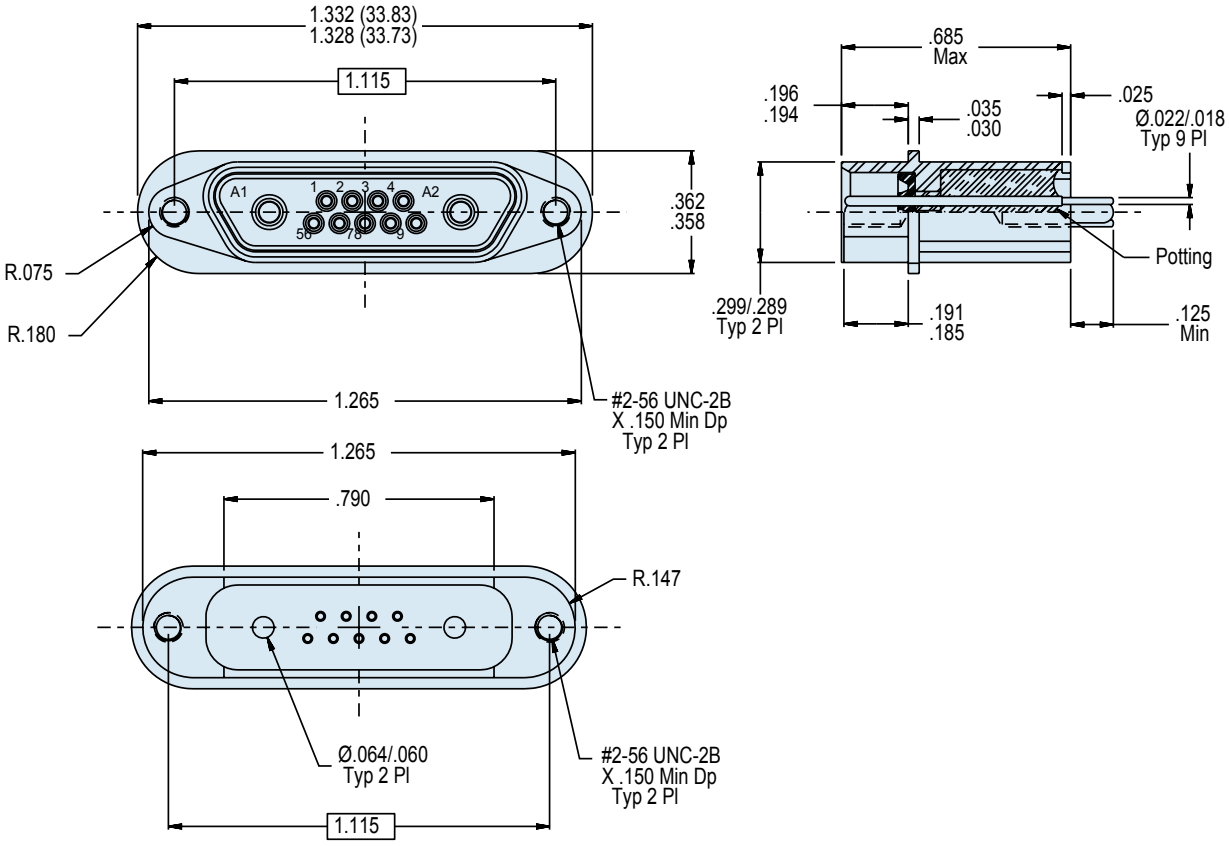

APPLICATION NOTES

1. Material/Finish:
   Shell* - 300 Series CRES/passivate or
   300 Series CRES/Nickel Plate
   Contacts - Nickel iron alloy/gold plate
   Insulator - Glass bead/N.A.
   Interfacial Seal - Fluorosilicone elastomer/N.A.
   Potting - Epoxy/N.A.
   *Consult factory for other shell finishes and O-Ring materials.
2. Metric dimensions (mm) are indicated in parentheses.
3. Test Criteria:
   Hermeticity - <1 x 10^{-7} scc He/sec @1 ATM Delta
   DWV - #23 contacts: 500 VAC pin-to-shell
   #16 contacts: 1800 VAC pin-to-shell
   I.R. - 5,000 megohms minimum @500 VDC
4. Glenair 797-077 is designed to intermate with Glenair 790-025SE-11P2 connector.
5. Contact style P.C. termination.

© 2013 Glenair, Inc.

Basic Part Number	Shell Size				
797-087	Z1	H	-	66	N

Finish
Z1 = Passivate
ZL = Nickel Plate

Arrangement

Mating Hardware Option
N = No Hardware
P = Jackpost
G = Male Guide Pins
S = Female Guide Sockets
See Page L-12

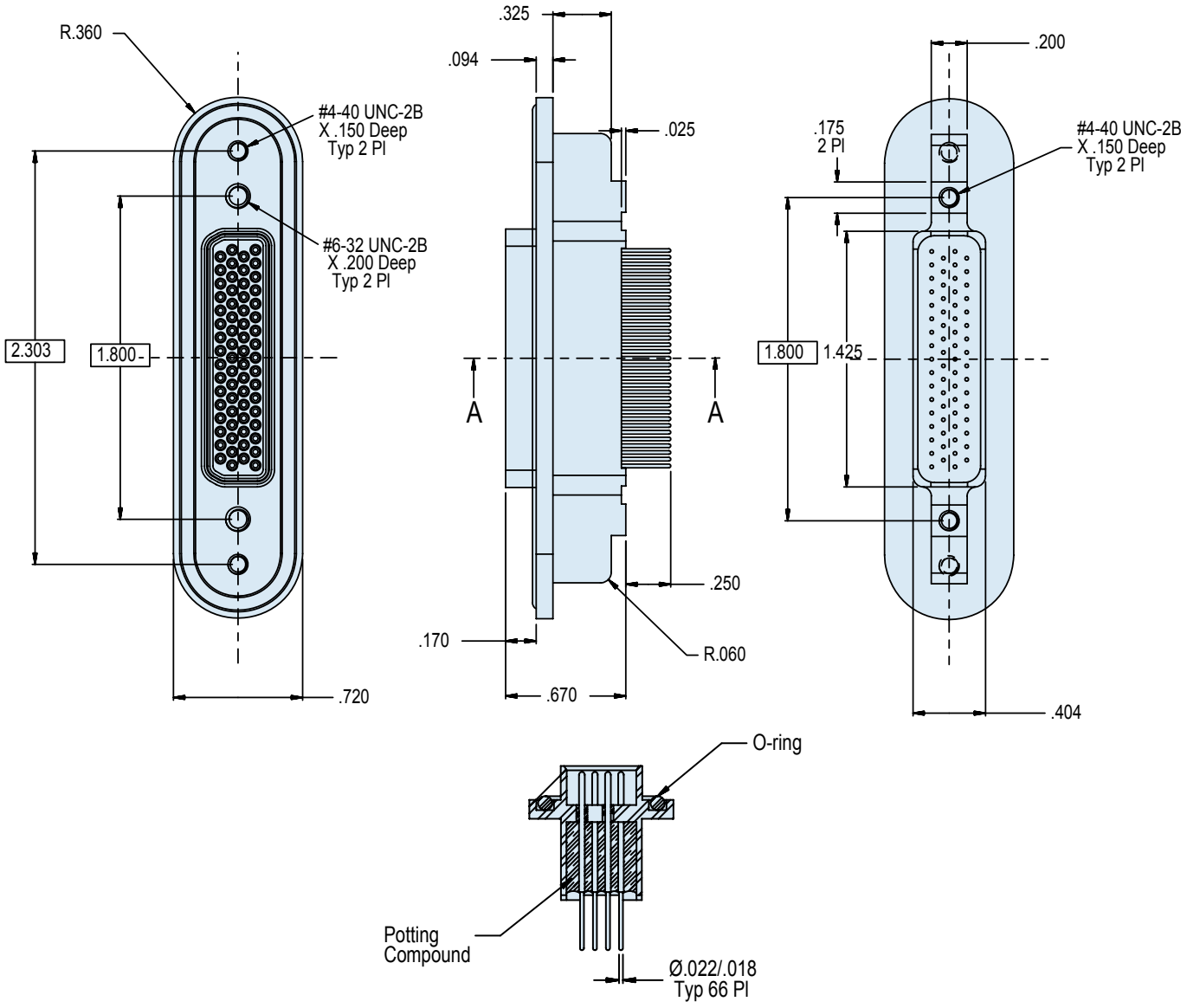

Section **A-A**

© 2013 Glenair, Inc.

797-087
Series 79 Micro-Crimp Hermetic Receptacle
Pin Contacts with P.C. Tails
Size H-66 Only

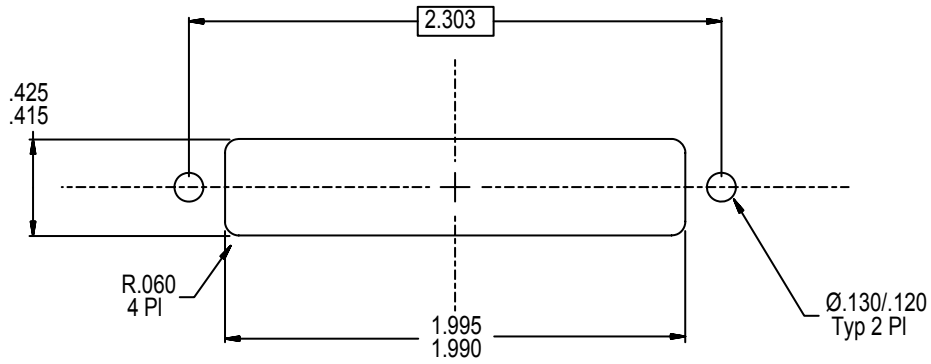

Recommended Panel Cutout

L

APPLICATION NOTES

1. Material/Finish:
   Shell* - 300 Series CRES/passivate or
   300 Series CRES/Nickel Plate
   Contacts - Nickel iron alloy/gold plate
   Insulator - Full glass/N.A.
   Seals - Fluorosilicone blend/N.A.
   Potting - Epoxy/N.A.
   *Consult factory for other shell finishes and O-Ring materials.
2. Metric dimensions (mm) are indicated in parentheses.
3. Test Criteria:
   Hermeticity - <1 x 10^{-7} scc He/sec @1 ATM Delta
   DWV - 500 VAC pin-to-pin and pin-to-shell w/o breakdown
   I.R. - 5,000 megohms minimum @500 VDC
4. Glenair 797-087 is designed to intermate with any Glenair 790 series plug having an H-66S (Socket) arrangement.

© 2013 Glenair, Inc.

797-204
Series 79 Micro-Crimp Hermetic Receptacle
Pre-Wired Pin Contacts
Shell Size G-33

Basic Part Number	Shell Size and Arrangement	Wire Gage	Wire Color							
797-204	Z1	G-33	P	4	K	7	-	18	N

Basic Part Number
797-204

Shell Size and Arrangement
Z1
G-33

Wire Gage
4 = #22 AWG
5 = #24 AWG
6 = #26 AWG

Wire Color
1 = White
5 = Color Coded Stripes per MIL-STD-681
7 = Ten Color Repeat

Hardware Option
N = No Hardware (4-40 UNC .190 Deep
P = Jackpost, 303 Stainless Steel

Finish
Z1 = Passivate
ZL = Nickel Plate

Contact Type
P = Pin Solder Cup

Wire Type
K = M22759/11 (600 Vrms, TFE)
J = M22759/33 (600 Vrms, ETFE)

Wire Length (Inches)
Example:
18 = 18 Inches

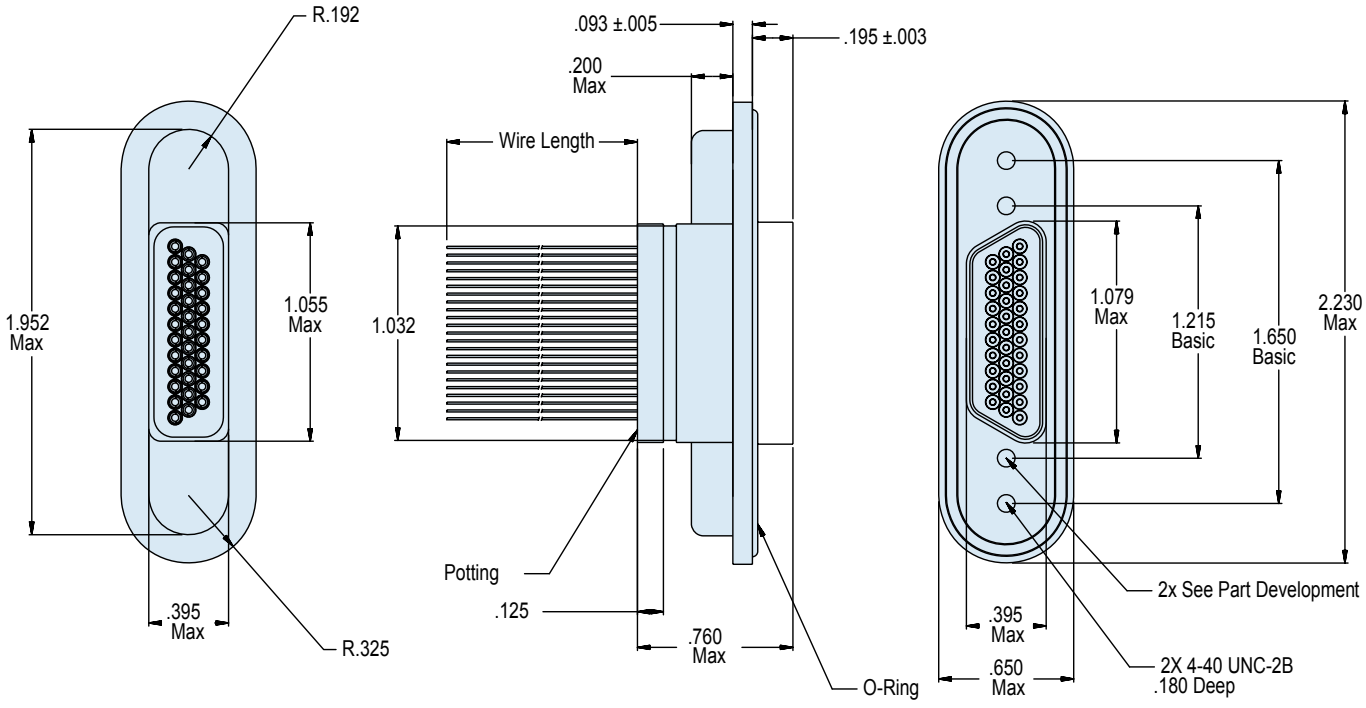

L

© 2013 Glenair, Inc.

797-204
Series 79 Micro-Crimp Hermetic Receptacle
Pre-Wired Pin Contacts
Shell Size G-33

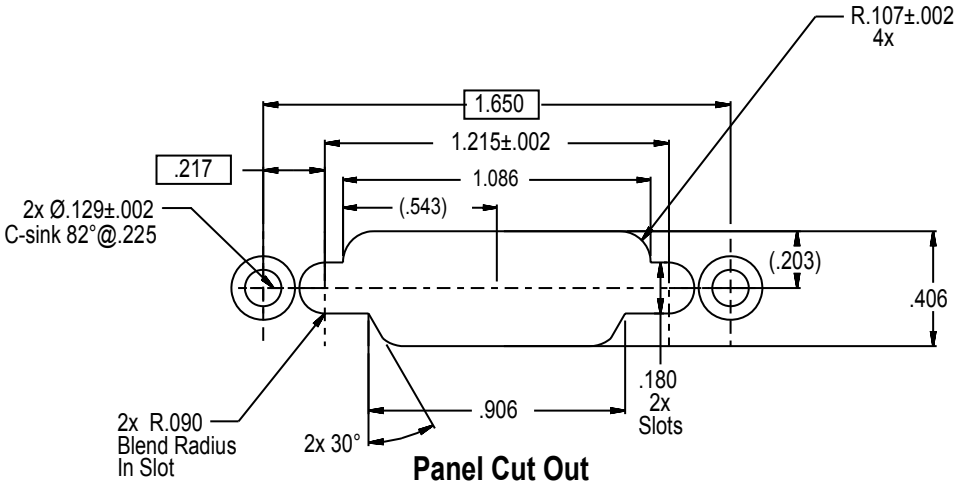

Panel Cut Out
Shell Size G

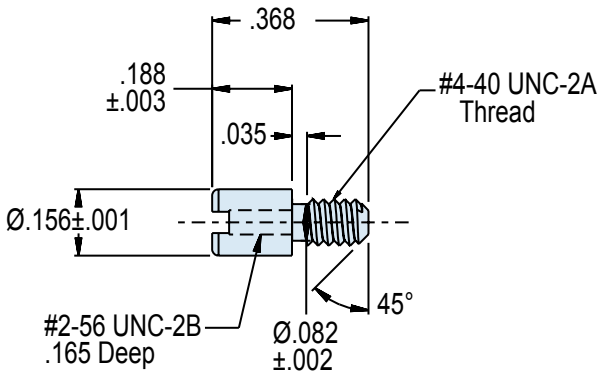

Jackpost

L

APPLICATION NOTES

1. Material/Finish:
   Shell* - 300 Series CRES/passivate or
   300 Series CRES/Nickel Plate
   Contacts - Nickel iron alloy/gold plate
   Insulators - Glass bead/N.A.
   Interfacial Seal - Fluorosilicone elastomer/N.A.
   O-Ring - Butyl/N.A.
   Potting - Stycast 2651 epoxy/N.A.
   *Consult factory for other shell finishes and O-Ring materials.
2. Metric dimensions (mm) are indicated in parentheses.
3. Performance:
   Hermeticity - <1 x 10^{-7} scc He/sec @1 ATM Delta
   DWV - 500 VAC pin-to-shell
   I.R. - 5,000 megohms minimum @500 VDC
   Temperature - -55°C to +155°C
4. Glenair 797-204 receptacle will mate with series 79 series plug having a G-33 insert.

© 2013 Glenair, Inc.

Basic Part Number

797-216

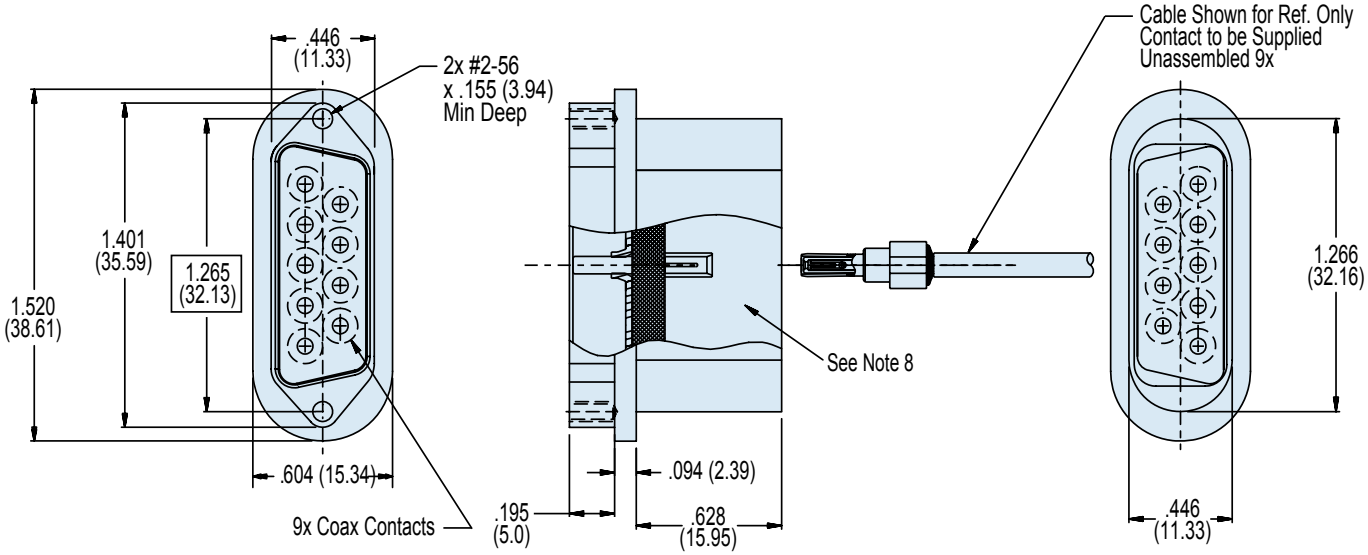

APPLICATION NOTES

1. Assembly to be identified with Glenair's name, part number and date code, space permitting.
2. Material/Finish:
   Shell - CRES/passivate.
   Pin Contact - Alloy 52/gold plated.
   Socket Contact - Copper alloy/gold plated.
   Insulator - Fused vitreous glass/N.A.
   Insulator - High grade rigid dielectric/N.A.
   Seals - Fluorosilicone elastomer/N.A.
   Potting compound - Epoxy.
3. The coax contact interface is AS39029/76, VSWR - 1.3:1, DC to 200 MHz; 1.5:1, 200 MHz to 500 MHz. Dev -500 VRMS.
4. Hermeticity: $<1x10^{-7}$ cc/Sec of helium at one atmosphere delta P over the operating temperature range.
5. Insulation resistance: Greater than 5000 megohms.
6. Dielectric withstanding voltage: 500 VAC pin to pin and pins to shell.
7. Connector requires epoxy backfill after cable/wire terminated and installed into the connector.
8. Operating temperature: -57°C to 85°C.
9. Metric dimensions (mm) are indicated in parentheses.

© 2013 Glenair, Inc. CAGE CODE 06324 Printed in U.S.A.

SERIES 970
HIGH AMPACITY,
HARSH ENVIRONMENT

POWERTRIP™

The power connector for extreme environments–now available in hermetic versions



Protect circuits with Series 970 PowerTrip™ connectors

The George HW Bush, pictured above, is the first US Navy surface ship to use the Series 970 PowerTrip™ connector. Series 970 connectors fill the need for a military-grade harsh environment power connector with improved mechanical, environmental and electrical performance. PowerTrip™ also delivers reduced size and weight compared to lower-density 5015 type power connectors. Available hermetic versions feature triple-start mating threads, high density insert arrangements and advanced EMI protection. The PowerTrip™ connector is ideal for power distribution units, hybrid electric drives, motors, and other high current, high-reliability applications.

Glenair, Inc.
1211 Air Way
Glendale, CA
91201-2497
818-247-6000
sales@glenair.com
www.glenair.com

Protect High-Current Circuits with Glenair's Series 970 PowerTrip™ *Connectors*

The Series 970 PowerTrip™ connector fills the need for a military-grade harsh environment power connector with improved mechanical, environmental and electrical performance. Environmental versions and Hermetic versions share high performance Features such as triple-start mating threads, high ampacity contacts, upgraded material and finish choices and improved EMI protection. PowerTrip™ connector is ideal for power distribution units, hybrid electric drives, motors, and other high current applications. The louverband socket contact (plug side) and enhanced durability pin contacts (hermetic receptacle side) deliver low resistance and higher ampacity.

Quick Selection Guide

Part Number	Description	Page
	Series 970 PowerTrip™ Hermetic Connectors Introduction	M-2
	Glenair Hermetic Connector Products Special Leak Rate Mod Code	M-5
970-007	Jam Nut Mount PowerTrip™ Bulkhead Feedthrough Receptacle How to Order	M-6
970-012	Square Flange Mount PowerTrip™ Bulkhead Feedthrough Receptacle How to Order	M-8

© 2013 Glenair, Inc.

Glenair®

Series 970
PowerTrip™ Hermetic Connectors
Introduction

Series 970 PowerTrip™ *Connectors:* Superior Contacts, Mating Interface, and Backshell Attachment than Standard MS Type Power Connectors

The Series 970 connector is a high ampacity, harsh environment connector capable of meeting the demanding requirements of modern defense and aerospace systems.

Series 970 PowerTrip™ hermetic receptacles feature 316L stainless steel shells and compression glass insulators. Solder cup contacts are nickel-iron alloy and are non-removable. Coupling threads are triple-start ACME type. Contacts are silver plated high conductivity copper alloy, or choose gold-plated contacts. Fluorosilicone rubber face seal on pin connector. Stainless steel shells are passivated, or choose nickel plating for improved shell-to-shell conductivity and EMI protection. Hermeticity is 1 X 10^{-7} cc/sec maximum helium leak rate with one atmosphere pressure differential.



- **Compression Glass Seal**
- **1 X 10^{-7} cc/sec He leak rate**
- **Both Pin and Socket Versions**
- **Stainless Steel Shell**

PRODUCT FACTS
2000 VAC Sea Level DWV Rating
-65°C to +200°C Operating Temperature
6 Feet Water Immersion, 48 Hours
65 dB min. Attenuation, up to 10GHz
2000 Cycles Mating Durability
MIL-S 901 Grade A High-Impact Shock
43 g Random Vibration

- ***Fast, easy connector mating with triple-start ACME thread. 360° turn for full mating***
- ***5 polarizing keys***
- ***Reduced size and weight***
- ***Louverband sockets for improved ampacity and longer life***
- ***High conductivity copper alloy contacts***
- ***Crimp, rear release contact system***
- ***Splined backshell interface for improved EMI protection***
- ***Ratcheting coupling nut for secure mating***
- ***-65° C to +200° C***
- ***Size 8, 4 and 1/0 contact sizes***

© 2013 Glenair, Inc.
CAGE CODE 06324
Printed in U.S.A.

GLENAIR, INC. • 1211 AIR WAY • GLENDALE, CA 91201-2497 • 818-247-6000 • FAX 818-500-9912
www.glenair.com
E-Mail: sales@glenair.com





Louverband Contacts
High ampacity contacts with up to 44 points of contact for improved wear and lower voltage drop.

Triple-Start Coupling
Rugged ACME threads resist cross-threading and allow fast mating.

Ratchet Mechanism
Ratcheting anti-decoupling mechanism prevents coupling ring backoff when subjected to vibration.



Louverband Contact

SPECIFICATIONS	
Current Rating	Up to 225 A.
Dielectric Withstanding Voltage	2000 VAC
Insulation Resistance	5000 megohms minimum
Operating Temperature	-65° C. to +200° C.
Shock	300 g.
Vibration	37 g.
Shielding Effectiveness	65 dB minimum from 1GHz to 10GHz.
Durability	2000 mating cycles

MATERIALS AND FINISHES	
Shells, Jam Nuts	Aluminum alloy, stainless steel or marine bronze
Contacts	High conductivity copper alloy, gold or silver-plated
Insulators	Glass-reinforced epoxy
Contact Retention Clip	Beryllium copper alloy
Seal, O-rings, Grommet	Fluorosilicone rubber
Spring	Nickel-plated beryllium copper

© 2013 Glenair, Inc. CAGE CODE 06324 Printed in U.S.A.

About LouverBand Contacts

LouverBand contacts outperform conventional contacts in the areas of durability (2000 cycles), lower mating force, and resistance.

LouverBand socket contacts consist of two parts: a copper alloy contact body (*Fig. 1*) and a beryllium copper band (*Fig. 2*). The spring is seated into the contact body (*fig. 3*). LouverBand contacts offer significant advantages over other contact designs. Each louver functions as an independent leaf spring. The multiple louvers in each spring distribute current more evenly, lowering the voltage drop compared to conventional contacts. A multi-spring louverband contact also reduces hotspots. Conventional contacts, such as the split-tine contact shown in (*figure 4)*, are known to have relatively few points of contact at the microscopic level.

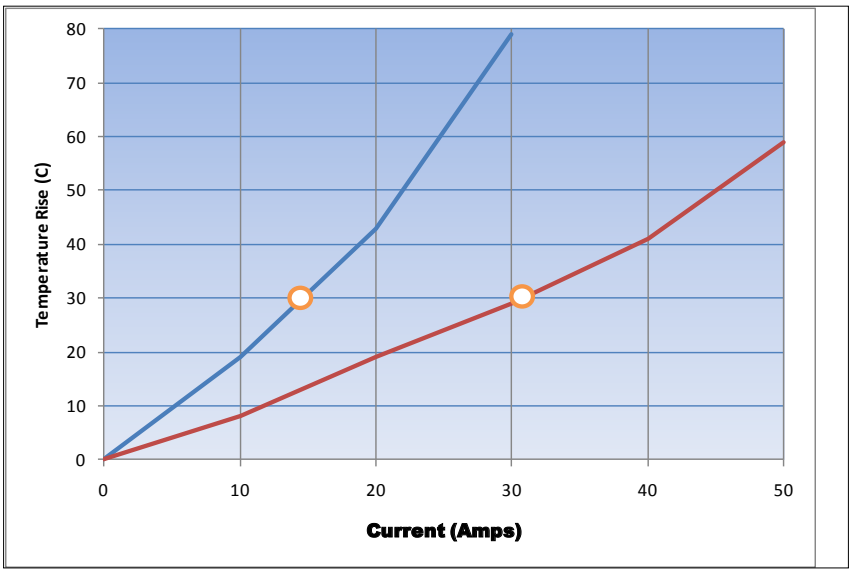

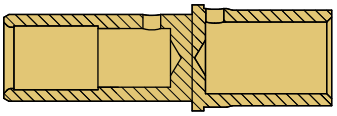

Figure 1
Socket Contact Body

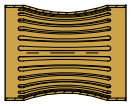

Figure 2
LouverBand Spring



Figure 3
Assembled Contact

Connector current ratings are usually determined by establishing the equilibrium current resulting in a 30° C temperature rise (T-rise) above ambient. Louverband contacts typically exhibit much higher current ratings than conventional split-tine contacts. However, this higher current rating can exceed the de-rated current-carrying capacity of the wire. So why not use a conventional contact as long as the contact current rating exceeds the amount of current in the circuit? Louverband contacts are much less susceptible to damage from superheating caused by momentary current overloads. AC induction motors can cause transient currents ten times greater than the steady state current. These transient currents have a duration of only a few milliseconds. Contacts with relatively few points of contact are susceptible to melting when exposed to transient currents. The contact interface becomes welded, and de-mating the connectors breaks the weld, damaging the interface and eventually leading to high resistance, corrosion and even catastrophic failure.



Figure 4
Split-tine Contact on the Left, LouverBand Contact on the Right

© 2013 Glenair, Inc.

What is outgassing?

Plastic and rubber materials give off gaseous molecules. For example, the smell inside a new car is caused by polymer outgassing. Heat and vacuum increase the rate of diffusion. In a spacecraft the gases coming off polymers can contaminate optical surfaces and instruments. The result is degraded performance.

How is outgassing measured?

The space industry has adopted a standardized test procedure, ***ASTM E 595***, to evaluate out-gassing properties of polymers. Small samples of material are heated to 125° C. at a vacuum of 5 X 10^{-5} torr for 24 hours. Then the sample is weighed to calculate the ***Total Mass Loss*** (TML). The TML cannot exceed 1.00% of the total initial mass. During the test, outgassed matter condenses on a cooled collector plate. The quantity of outgassed matter is caluclated to determine the ***Collected Volatile Condensable Material*** (CVCM). The CVCM cannot exceed 0.10% of the original specimen mass.

What is NASA screening?

NASA specification EEE-INST-002 provides instructions on selecting, screening and qualifying parts for use on NASA GSFC space flight projects.

What screening level is required?

NASA defines three levels of screening: level 1 for highest reliability, level 2 for high reliability, and level 3 for standard reliability. Level 3 equates to standard lot acceptance inspection. Levels 1 and 2 call for additional testing.

HOW TO ORDER SPACE GRADE CONNECTORS

Step 1: Find a Standard Part Number

Electroless nickel plated shells are preferred for space flight. Cadmium plating is prohibited.

Step 2: Select a NASA Screening Level

The term "Screening Level" refers to the final inspection procedure.

Level 1 for mission-critical highest reliability
Level 2 for high reliability
Level 3 for standard reliability

Step 3: Choose Outgassing Processing

A detailed explanation of outgassing is on the following pages. The fluorosilicone rubber seals commonly used on aerospace-grade connectors such as MIL-DTL-38999 and Series 79 connectors, along with certain bonding agents and inks, do not meet NASA outgassing requirements unless the connector is specially processed. Glenair outgassing tests have shown oven baking or thermal vacuum outgassing processing are sufficient to reduce outgassing levels to NASA standards. Oven baking is more economical than thermal vacuum outgassing.

Step 4: Select the Mod 429 Code that Matches the Desired Level of Screening and Outgassing

Use the following table to choose the right modification code. Add the mod code to the connector part number. Example: 790-024PC-13ML-***429C***

NASA SCREENING LEVELS AND MODIFICATION CODES

NASA Screening Level	Special Screening Only	Special Screening Plus Outgassing Processing	
		8 Hour Oven Bake 400° F.	Thermal Vacuum Outgassing 24 hrs. 125° C.
Level 1 Highest Reliability	Mod 429B	Mod 429J	Mod 429C
Level 2 High Reliability	Mod 429	Mod 429K	Mod 429A
Level 3 Standard Reliability	(Use standard part number)	Mod 186	Mod 186M

M

© 2013 Glenair, Inc.

Glenair®

970-007
PowerTrip™ Hermetic Bulkhead Feedthrough
Receptacle with Jam Nut Mounting
How to Order Information

Series 970 Hermetic Feed-Thru Bulkhead



Series 970 PowerTrip™ hermetic feed-thru bulkhead receptacles have pin contacts on one side and socket contacts on the other side. Attach mating plug connectors to both sides. Compression glass hermetic seal. 100% tested to meet helium leak rate of 1 x 10^{-7} cc/second at 15 psi pressure differential. Pin contact end is iron alloy, socket end is copper alloy with beryllium copper louverband spring. Coupling threads are triple-start ACME type. Contacts are factory-installed and are non-removable. Standard contacts are silver plated, or choose gold-plated contacts for improved corrosion protection in space or petrochemical environments. Fluorosilicone O-ring and face seal provide water resistant sealing. Jam nut rear panel mounting, for panel thicknesses from 1/16 -inch (1.58mm) to ½ inch (12.7mm).

HOW TO ORDER

Sample Part Number

970-007	Z1	24-5	P	1	-1
Series	**Shell Material and Finish**	**Shell Size - Insert Arrangement**	**Contact Type**	**Contact Plating**	**Key Position**

970-007
Series 970 Feed-Thru Bulkhead Receptacle, Jam Nut Mounting

Stainless Steel Shell

Z1
Passivated SST

ZL
Electrodeposited Nickel over SST

Contact Arr.	Contact Size and Qty				
	#16	#12	#8	#4	#1/0
18-2			2		
18-4		2	2		
20-3			3		
20-5		2	3		
20-7	4		3		
20-4			4		
24-5			5		
24-2				2	
24-6		4		2	
24-3				3	
24-A6		3		3	
28-4				4	
28-9	5			4	
32-5				5	
32-2					2
32-4				2	2
32-3					3
32-6		3			3
36-4					4
40-5					5

P
Pin Contacts on Jam Nut Side

S
Socket Contacts on Jam Nut Side

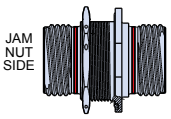

1
Silver Plated Contacts (Size 8, 4, 0 only)

2
Gold Plated Contacts

-1
Position 1

-2
Position 2

-3
Position 3

-4
Position 4

-5
Position 5

-6
Position 6

M

© 2013 Glenair, Inc.

970-007 Feed-Thru Receptacle Connector Dimensions

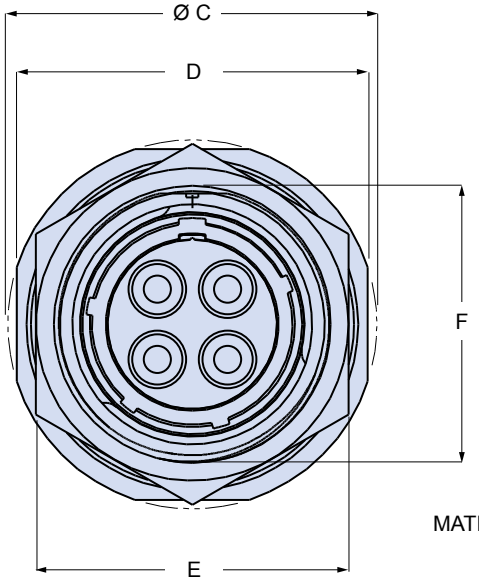

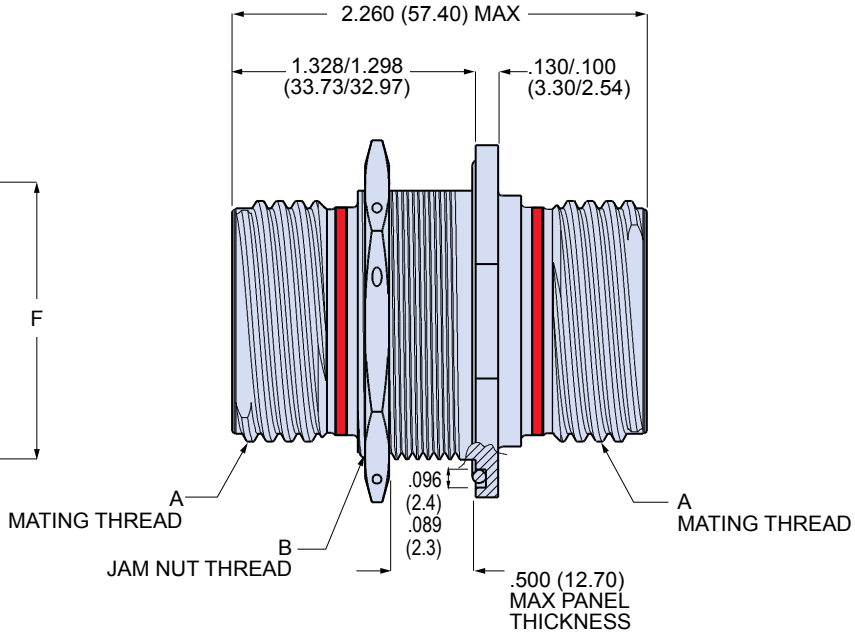

DIMENSIONS										
Shell Size	A Mating Thd.	B Jam Nut Thd.	ø C		D		E		F	
			In.	mm.	In.	mm.	In.	mm.	In.	mm.
18	1.125-.1P-.3L-TS-2A	1.250-18 UNEF-2A	1.733	44.02	1.639	41.63	1.438	36.53	1.212	31.06
20	1.250-.1P-.3L-TS-2A	1.4375-18 UNEF-2A	1.921	48.79	1.827	46.41	1.625	41.28	1.399	35.81
24	1.500-.1P-.3L-TS-2A	1.625-18 UNEF-2A	2.108	53.54	2.014	51.16	1.822	46.28	1.587	43.76
28	1.750-.1P-.3L-TS-2A	1.9375-16 UN-2A	2.425	61.60	2.327	59.11	2.188	55.58	1.899	48.51
32	2.000-.1P-.3L-TS-2A	2.125-16 UN-2A	2.607	66.24	2.513	63.86	2.375	60.33	2.084	53.00
36	2.250-.1P-.3L-TS-2A	2.375-16 UN-2A	2.857	72.57	2.763	70.18	2.625	66.68	2.323	59.00
40	2.500-.1P-.3L-TS-2A	2.875-16 UN-2A	3.107	78.92	3.013	76.53	2.875	73.03	2.548	64.72

M

KEY POSITIONS				
Position	A°	B°	C°	D°
1	80	142	196	293
2	135	170	200	310
3	49	169	200	244
4	66	140	200	257
5	62	145	180	280
6	79	153	197	272

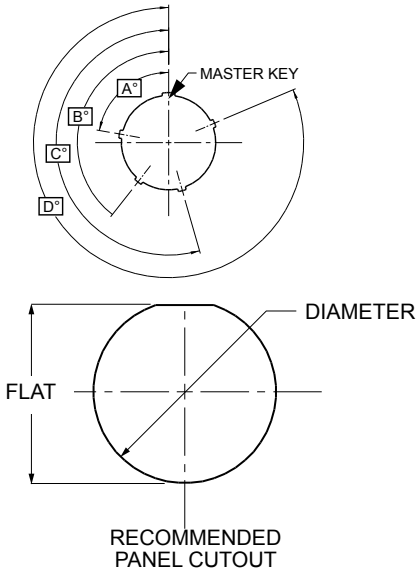

PANEL CUTOUT				
	Diameter		Flat	
	In.	mm.	In.	mm.
Shell Size	-.000 +.010	-.00 +0.25	-.000 +.010	-.00 +0.25
18	1.254	31.85	1.217	30.91
20	1.441	36.60	1.404	35.66
24	1.629	41.38	1.592	40.64
28	1.941	49.30	1.904	48.36
32	2.129	54.08	2.092	53.14
36	2.379	60.43	2.328	59.13
40	2.629	66.78	2.553	64.85

© 2013 Glenair, Inc.
CAGE CODE 06324
Printed in U.S.A.

Glenair®

970-012
PowerTrip™ Hermetic Bulkhead Feedthrough
Receptacle with Square Flange Mounting
How to Order Information



970-012 Hemetic Receptacles

Series 970 PowerTrip™ hermetic receptacles feature 316L stainless steel shells and compression glass insulators. Solder cup contacts are nickel-iron alloy and are non-removable. Socket contacts have copper alloy louverband spring for multiple points of electrical contact. Coupling hreads are triple-start ACME type. Contacts are silver plated high conductivity copper alloy, or choose gold-plated contacts for improved corrosion protection in space or petrochemical environments. Fluorosilicone rubber face seal on pin connector. Stainless stell shells are passivated, or choose nickle plating for improved shell-to-shell conductivity and EMI protection. Hermeticity is 1 X 10^{-7} cc/sec maximum helium leak rate with one atmosphere pressure differential.

HOW TO ORDER

Sample Part Number

970-012	Z1	32-5	P1	N	-1
Series	**Shell Material and Finish**	**Shell Size - Insert Arrangement**	**Contact Type and Plating**	**Mounting Hole Option**	**Key Position**

970-012
Series 970 Receptacle, Square Flange Panel Mounting

Stainless Steel Shell

Z1
Passivated SST

ZL
Electrodeposited Nickel over SST

Contact Arr.	Contact Size and Qty				
	#16	#12	#8	#4	#1/0
18-2			2		
18-4		2	2		
20-3			3		
20-4			4		
20-5		2	3		
20-7	4		3		
24-2				2	
24-3				3	
24-5			5		
24-6		4		2	
24-A6		3		3	
28-4				4	
28-9	5			4	
32-2					2
32-3					3
32-4				2	2
32-5				5	
32-6		3			3
36-4					4
40-5					5

P1
Pin Contacts, Silver Plating

P2
Pin Contacts, Gold Plating

S1
Socket Contacts, Silver Plating

S2
Socket Contacts, Gold Plating

N
Thru-Hole

-1
Position 1

-2
Position 2

-3
Position 3

-4
Position 4

-5
Position 5

-6
Position 6

M

© 2013 Glenair, Inc.

970-007 Feed-Thru Receptacle Connector Dimensions

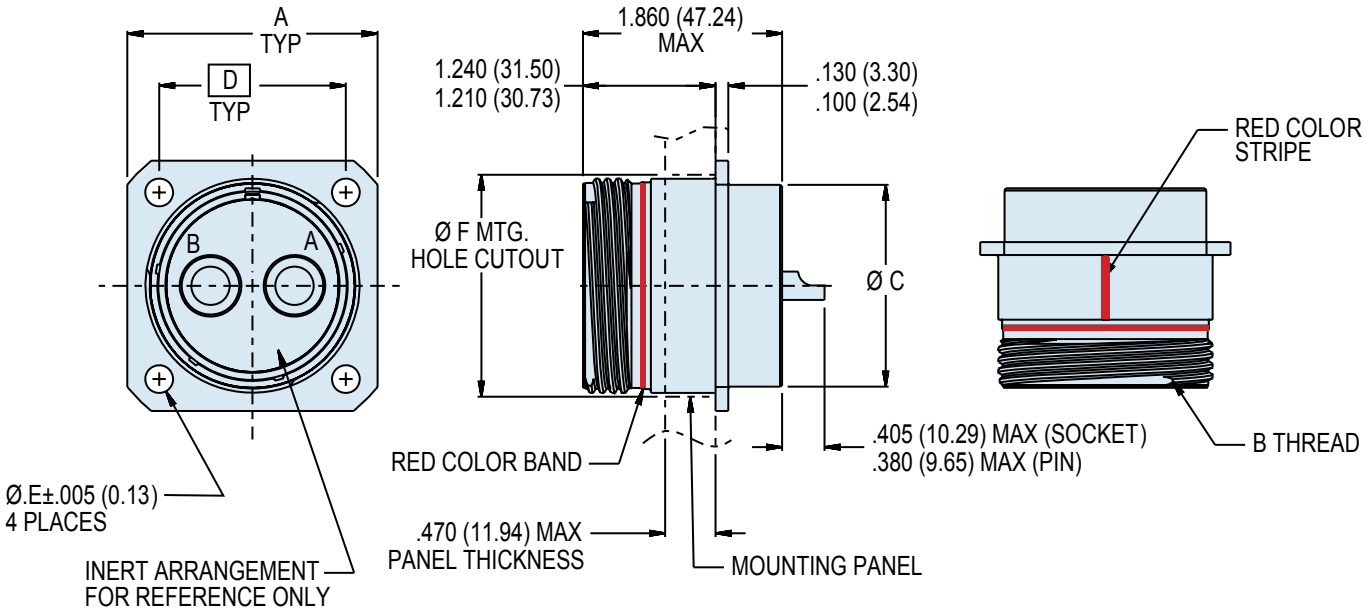

DIMENSIONS												
Shell Size	ø A		B Mating Thd.	ø C		D BSC		ø E Thru		ø F Mtg. Hole	
	In.	mm.		In.	mm.	In.	mm.	In.	mm.	In.	mm.
18	1.383	35.13	1.125-.1P-.3L-TS-2A	.972	24.69	1.015	25.78	.146	3.70	1.187	30.15
20	1.508	38.30	1.250-.1P-.3L-TS-2A	1.116	28.35	1.140	28.96			1.374	34.90
24	1.718	43.64	1.500-.1P-.3L-TS-2A	1.300	33.02	1.281	32.54			1.562	39.67
28	2.138	54.31	1.750-.1P-.3L-TS-2A	1.604	40.74	1.568	39.83	.170	4.30	1.874	47.60
32	2.328	59.13	2.000-.1P-.3L-TS-2A	1.875	47.63	1.734	44.04			2.062	52.37
36	2.578	65.48	2.250-.1P-.3L-TS-2A	2.093	53.16	1.984	50.39			2.302	58.47
40	2.828	71.83	2.500-.1P-.3L-TS-2A	2.310	58.67	2.234	56.74			2.562	65.07

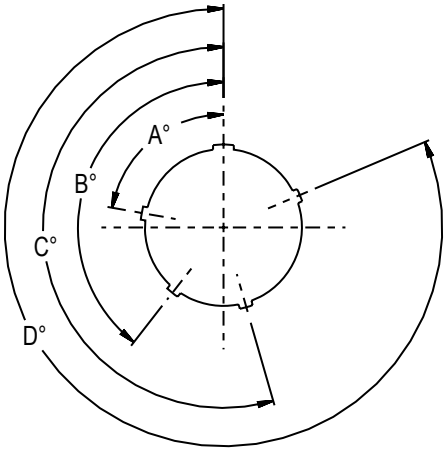

KEY POSITIONS				
Position	A°	B°	C°	D°
1	80	142	196	293
2	135	170	200	310
3	49	169	200	244
4	66	140	200	257
5	62	145	180	280
6	79	153	197	272

© 2013 Glenair, Inc.

SPECIAL
CONNECTORS

GLENAIR SPECIAL

Hermetic Connectors With Durable Glass–to–Metal Sealing



Glenair excels in the rapid prototyping and development of custom hermetic connectors from initial concept to finished parts, our factory is fully self-sufficient and can produce highly reliable, rugged interconnects machined from stainless steel, Inconel®, or kovar®. Our expertise extends to the design of high density interconnects to resolve gas, moisture, and particle ingress problems. And most importantly, at Glenair we are happy to consider your limited quantity and prototype requirements. Unlike other manufacturers, Glenair is well positioned to service both low-quantity custom orders as well as high volume production requirements. Basic mounting configurations, a weld-mount or O-Ring mount design may be customized for unique application requirements.

GLASS-SEALED
Hermetic
CONNECTORS

Glenair®

Glenair, Inc.
1211 Air Way
Glendale, CA
91201-2497
818-247-6000
sales@glenair.com
www.glenair.com

Special Hermetic Connectors

Sometimes a standard part just won't do. For these situations Glenair welcomes your custom requirements. Whatever the need, we can propose a solution and back it up with rapid design and prototyping. Glenair special hermetic connectors are made from the same passivated stainless steel or ferrous steel shells, with glass insulators fused to the connector shell, and contacts meeting a leak rate of 1 X 10-7 cc/Helium per second. Innovative designs to meet every need are available from Glenair and, as always, **no minimums** are required.

Quick Selection Guide		
Part Number	Description	Page
237-263	Special Micro Circular Quick Disconnect Receptacle, Rear Panel Jam Nut Mount	N-2
2570-1290	Hermetic Single–Pin Feedthrough - Hi Temp, Hi Pressure	N-4

N

© 2013 Glenair, Inc.

237-263
Special Micro Circular Quick Disconnect Receptacle
Hermetic • Rear panel Jam Nut Mount, Socket PC Tail or Solder Cup

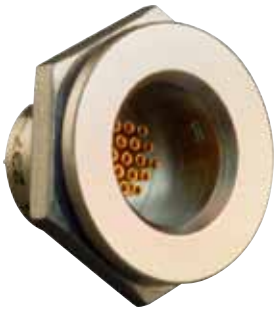

Product Series		Hermetic	
237-263	H	7	SP
	Shell Size: *7 or 19*		Contact Style: *SP = Socket, PC Tail; SS = Socket, Solder Cup*

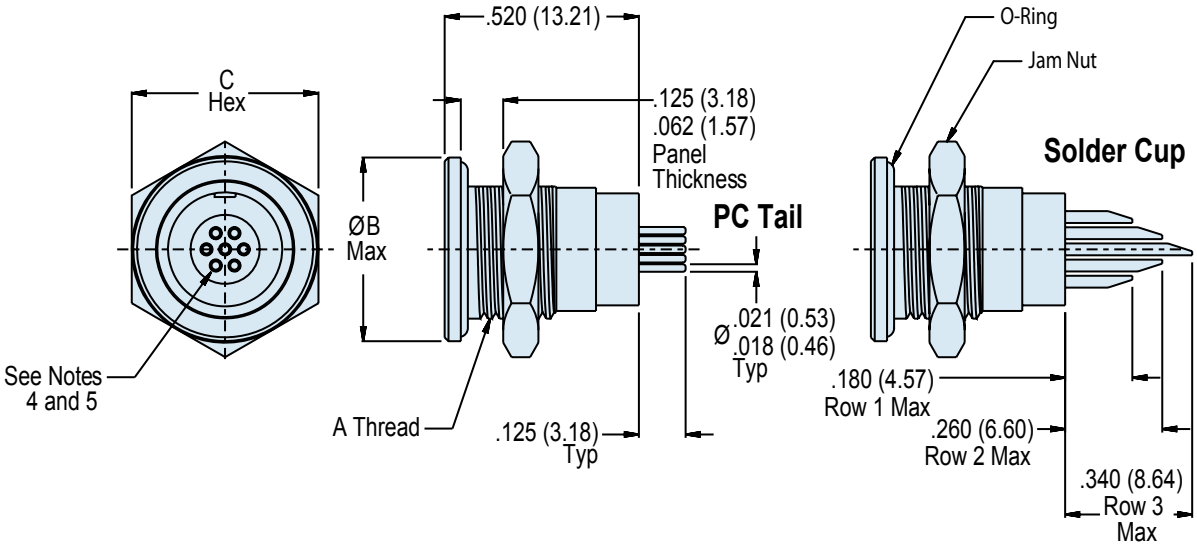

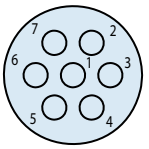

7 Contact
Socket Front View

FIGURE 1

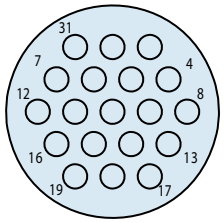

19 Contact
Socket Front View

* Additional shell materials available, including titanium and Inconel®. Consult factory for ordering information.

Dimensions in Inches (millimeters) are subject to change without notice.

© 2013 Glenair, Inc. U.S. CAGE Code 06324 Printed in U.S.A.

TABLE I: CONNECTOR DIMENSIONS					
Shell Size	A Thread Class 2A	B Dia	C Hex	D Flat	E Dia ± .005 (0.13)
7	.3750-32 UNEF	.565 (14.35)	.565 (14.35)	.360 (9.14) .357 (9.07)	.380 (11.1)
19	.5000-28 UNEF	.735 (18.67)	.735 (18.67)	.485 (12.32) .483 (12.27)	.505 (12.7)

HERMETIC LEAK RATE MOD CODES	
Designator	Required Leak Rate
–585A	1 x 10^{-10} cc Helium per second
–585B	1 x 10^{-9} cc Helium per second
–585C	1 x 10^{-8} cc Helium per second

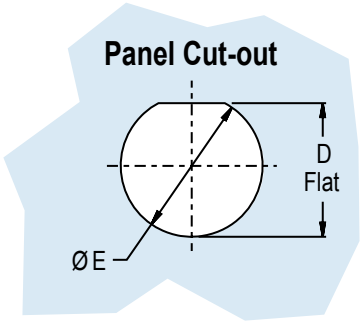

APPLICATION NOTES

1. Material/Finish:
   Shell, Jam Nut - Stainless steel/Passivated.
   Insulators - Full glass/N.A.
   O-Ring - Fluorosilicone/N.A.
   Contacts - Iron-nickel alloy/Gold plate.
2. Assembly is identified with manufacturer's name, cage code, part number and date code, space permitting.
3. Glenair 237-263 receptacle connector is designed to mate with Glenair quick disconnect micro circular plug, part number 257-985 having the same shell size and insert arrangement.
4. Insert arrangement is in accordance with Figure One.
5. Insert arrangement is shown for reference only.
6. Perfomance:
   Hermeticity - <1X10^{-6} SccHe/sec @ 1 atmosphere differential.
   D.W.V. - 150 VAC at sea level.
   I.R. - 5000 MegaOhms minimum.
7. Metric dimensions (mm) are in parentheses.

Dimensions in Inches (millimeters) are subject to change without notice.

© 2013 Glenair, Inc.

2570-1290
Special Micro Circular Quick Disconnect Receptacle
Hermetic • Single-Pin Feedthrough



Product Series

2570-1290

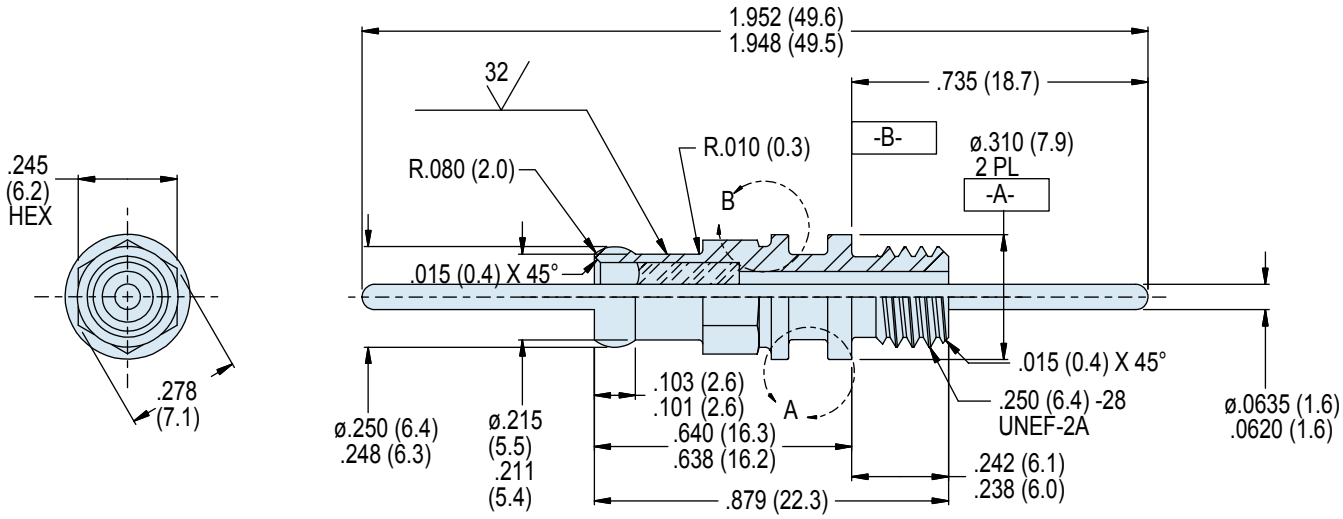

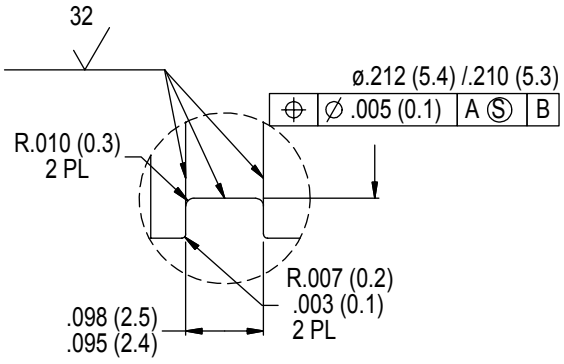

DETAIL A

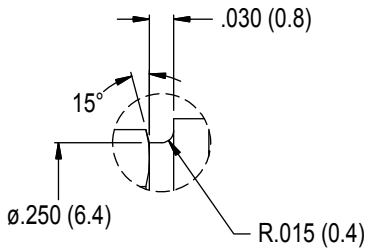

DETAIL B

N

APPLICATION NOTES

1. Material / Finish:
   Body - Inconel® X-750 / none
   Pin - Inconel® X-750 / gold plate .00005 min. thick
   Insulator - vitreous glass/n/a

2. Performance Tests:
   Hermeticity - <1 X 10^{-8} sccHe/sec @ 1 ATM diff
   D.W.V. - 1000 VDC pin to shell without breakdown
   I.R. - 5000 megohms min @ 500 VDC (ambient)
   500 megohms min @ 500 VDC (300° F)

Dimensions in Inches (millimeters) are subject to change without notice.

© 2013 Glenair, Inc.
U.S. CAGE Code 06324
Printed in U.S.A.

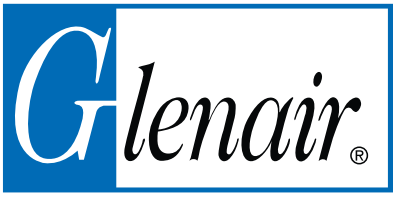

MIL-DTL-38999 Series I, II, III and IV QPL Hermetic Connectors		
Part number	Description	Page
	MIL-DTL-38999 Series I, II, III and IV Hermetic Class Insert Arrangements	B-2
	MIL-DTL-38999 Series I, II, III and IV Hermetic Class Layouts and Pin Counts	B-4
	MIL-DTL-38999 Hermetic Class Material Specifications and Finishes	B-5
	MIL-DTL-38999 Connector Performance Specifications	B-6
	MIL-DTL-38999 Contact Performance Specifications	B-9
	MIL-DTL-38999 Series I – IV Alternate Keyway Positions	B-10
	Recommended Torque Values	B-13
	MIL-DTL-38999 Hermetic Connectors and Environmental Mates	B-14
MS27469 / 231-100-H0	Wall Mount Hermetic Receptacle, Series I	B-16 / B-17
MS27470 / 231-100-H7	Jam Nut Mount Hermetic Receptacle, Series I	B-18 / B-19
MS27471 / 231-100-H5	Solder Mount Hermetic Receptacle, Series I	B-20 / B-21
231-103-H7	Jam Nut Mount Hermetic Bulkhead Feed-Thru, Series I	B-22
231-103-H9	Sav-Con® Jam Nut Mount Bulkhead Feed-Thru, Series I	B-24
257-255	Jam Nut Mount Hermetic Receptacle, Series I	B-26
MS27475 / 232-100-H0	Wall Mount Hermetic Receptacle, Series II	B-28 / B-29
MS27476 / 232-100-H2	Box Mount Hermetic Receptacle, Series II	B-30 / B-31
MS27477 / 232-100-H7	Jam-Nut Mount Hermetic Receptacle, Series II	B-32 / B-33
MS27478 / 232-100-H5	Solder Mount Hermetic Receptacle, Series II	B-34 / B-35
232-103-H7	Jam Nut Mount Hermetic Bulkhead Feedthrough, Series II Type	B-36
237-280	Special Weld-Mount Hermetic Receptacle, Series II	B-38
947-120	Jam Nut Mount Hermetic Bulkhead Feed-Thru, Series II	B-40
947-278	Jam Nut Mount Hermetic Bulkhead Feed-Thru	B-42
D38999/21 / 233-100-H2	Box Mount Hermetic Receptacle, Series III	B-44 / B-45
D38999/23 / 233-100-H7	Jam Nut Mount Hermetic Receptacle, Series III	B-46 / B-47
D38999/25 / 233-100-H5	Solder Mount Hermetic Receptacle, Series III	B-48 / B-49
D38999/27 / 233-100-H8	Weld Mount Hermetic Receptacle, Series III	B-50 / B-51
233-103-H7	Jam Nut Mount Hermetic Bulkhead Feed-Thru, Series III	B-52
233-103-H9	Jam Nut Mount Hermetic Plug/Receptacle Bulkhead Feed-Thru, Series III	B-53
237-033	Jam Nut Mount Hermetic with Double O-Rings, Series III	B-54
237-063	Special Hermetic Jam Nut Mount Receptacle, Series III	B-56
237-153	Hermetic Dual Flange Jam Nut Mount Receptacle, Series III	B-58
257-093	Jam Nut Mount Hermetic Bulkhead Feed-Thru, Series III	B-60
257-121	Special Jam Nut Mount Hermetic Receptacle with Accessory Threads, Series III	B-62
257-215	Jam Nut Mount Hermetic Bulkhead Feed-Thru w/ Crimp Removable Contacts, Series III	B-64
257-216	Jam Nut Mount Hermetic Bulkhead Feed-Thru w/ Crimp Removable Contacts, Series III	B-66
257-288	Box Mount Hermetic Bulkhead Feed-Thru w/ Crimp Removable Contacts, Series III	B-68
257-333	Hermetic Jam Nut Receptacle w/ Crimp Removable Contacts, Series III	B-70
947-082	Jam Nut Hermetic Bulkhead Feed-Thru, Series III	B-72
947-115	Jam Nut Hermetic Bulkhead Feed-Thru, Series III	B-73
947-117	Jam Nut Mount Hermetic Bulkhead Feed-Thru, Series I	B-74
947-282	Flange Mount Hermetic Bulkhead Feed-Thru, Series III	B-76
D38999/41 / 234-100-H2	Box Mount Hermetic Receptacle, Series IV	B-78 / B-79
D38999/43 / 234-100-H7	Jam Nut Mount Hermetic Receptacle, Series IV	B-80 / B-81
D38999/45 / 234-100-H5	Solder Mount Hermetic Receptacle, Series IV	B-82 / B-83
D38999/48 / 234-100-H8	Weld Mount Hermetic Receptacle, Series IV	B-84 / B-85

© 2013 Glenair, Inc.

Hermetic Connectors Product Index

Series 800 Mighty Mouse Hermetic Connectors		
Part Number	Description	Page
	Series 80 Mighty Mouse Product Selection Guide	C-2
	Series 80 Mighty Mouse Contact Arrangements	C-4
	Series 80 Mighty Mouse Straight PCB Footprints	C-9
	Series 80 Mighty Mouse Flange Gaskets 809-108	C-25
	Series 80 Mighty Mouse Recommended Torque Values	C-28
	Glenair Connector Products Special Leak Rate Mod Code	C-29
800-013	Series 80 How to Order Information	C-30
800-013-02 and 800-013-03	Square Flange Mount Connectors	C-32
800-013-07	Jam Nut Mount Connector	C-33
801-012	Series 801 How to Order Information	C-34
801-012-02	Square Flange Mount Connector	C-35
801-012-03	Solder Mount Connector	C-36
801-012-07	Jam Nut Mount Connector	C-37
801-012-013	Weld Mount Connector	C-38
801-059	Quick Coupling Connector with Co-Ax Pins Ordering Information	C-39
801-059-02	Flange Mount Quick Coupling Connector with Co-Ax Pins	C-40
801-059-03	Solder Mount Quick Coupling Connector with Co-Ax Pins	C-41
801-059-07	Jam Nut Mount Quick Coupling Connector with Co-Ax Pins	C-42
802-013	Series 802 Aqua Mouse Submersible Hermetic Receptacle	C-43
802-013-00	Front Mount Jam Nut Receptacle	C-44
802-013-02	Square Flange Mount Receptacle	C-45
802-013-03	Weld Mount Receptacle	C-46
802-013-07	Rear Mount Jam Nut Receptacle	C-47
802-040	Series 802 Aqua Mouse Connector How to Order Information	C-48
802-040-00	Front Panel Jam Nut Mount Connector, Coax Contacts	C-49
802-040-02	Front Panel Square Flange Mount Connector, Coax Contacts	C-50
802-040-03	Weld Mount Connector, Coax Contacts	C-51
802-040-07	Rear Panel Jam Nut Mount Connector, Coax Contacts	C-52
803-006	Series 803 How to Order Information	C-53
803-006-02 and 803-006-07	1/4 Turn Bayonet and Jam Nut Mount Connectors	C-54
804-006	Series 804 How to Order Information	C-55
804-006-00	Front Panel Jam Nut Mount Receptacle	C-56
804-006-07	Rear Panel Jam Nut Mount Receptacle	C-57
805-006	Series 805 How to Order Information	C-58
805-006-02	Square Flange Mount Connector	C-59
805-006-03	Solder Mount Connector	C-60
805-006-07	Jam Nut Mount Connector	C-61
805-006-013	Front Panel Weld Mount Connector	C-62
MIL-DTL-26482 Type Quick Release Bayonet Cupling Hermetic Connectors		
Part Number	Description	Page
	MIL-DTL-26482 Type Insert Arrangements	D-2
	MIL-DTL-26482 Type Alternate Key Positions	D-3
	Glenair Hermetic Connector Products Space Grade Mod Codes	D-4
	Glenair Hermetic Connector Porducts Special Leak Rate Mod Codes	D-5
230-014	Bayonet Coupling Solder Mount Receptacle MS3113 Type	D-6

© 2013 Glenair, Inc.

230-015	Bayonet Coupling Jam Nut Receptacle MS3114 Type	D-8
947-303	Narrow Flange Mount Bulkhead Feed-Thru MS3440 Type	D-10
230-035	Bayonet Coupling Narrow Flange Mount Receptacle MS3112 Type	D-12
230-016	Bayonet Coupling Narrow Flange Mount Receptacle MS3440 Type	D-14
230-017	Bayonet Coupling Wide Flange Mount Receptacle MS3442 Type	D-16
230-018	Bayonet Coupling Solder Flange Mount Receptacle MS3443 Type	D-18
230-019	Quick Release Bayonet Receptacle, Single Hole Jam Nut MS3443 Type	D-20
230-020	Bayonet Coupling Solder Mount Receptacle with Solderless Contacts MS3473 Type	D-22
230-021	Bayonet Coupling Box Mount Receptacle with Solderless Contacts MS3477 Type	D-24
230-022	Bayonet Coupling Jam Nut Mount Receptacle with Solderless Contacts MS3479 Type	D-26
230-034	Bayonet Coupling Jam Nut Receptacle MS3449 Type	D-28
230-240	MIL-DTL-26482 Series I Connector, Special Square Flange Mount, Bayonet Coupling	D-30
257-135	Bayonet Coupling Jam Nut Mount Pin/Pin Bulkhead Feed-Thru Receptacle	D-32
947-292	Bayonet Coupling Jam Nut Mount Bulkhead Feed-Thru Receptacle	D-34
MIL-DTL-83723 Series III Type Threaded and Bayonet Coupling Heremtic Connectors		
Part Number	Description	Page
	MIL-DTL-83723 Series III Type Insert Arrangements	E-2
	Glenair Hermetic Connector Products Space Grade Mod Codes	E-3
	Glenair Hermetic Connector Products Special Leak Rate Mod Code	E-4
	MIL-DTL-83723 Series III Type Insert Arrangements and Keyway Positions	E-5
230-023	Bayonet Coupling Square Flange Receptacle with Solder Terminals 83723/79 Type	E-6
230-024	Bayonet Coupling Solder Flange Receptacle with Solder Terminals 83723/80 Type	E-8
230-025	Bayonet Coupling Jam Nut Receptacle with Solder Terminals 83723/81 Type	E-10
230-026	Bayonet Coupling Solder Flange Receptacle with Straight Pin Contacts 83723/93 Type	E-12
230-027	Bayonet Coupling Jam Nut Receptacle with Straight Pin or PCB Contacts 83723/88 Type	E-14
230-028	Threaded Coupling Square Flange Receptacle with Solder Terminals 83723/89 Type	E-16
230-029	Threaded Coupling Jam Nut Receptacle with Solder Terminals 83723/90 Type	E-18
230-030	Threaded Coupling Solder Flange Receptacle with Solder Terminals	E-20
MIL-DTL-26500 Type Hermetic Connectors		
Part Number	Description	Page
	MIL-DTL-26500 Type Insert Arrangements	F-2
	Glenair Hermetic Connector Products Space Grade Mod Codes	F-3
	Glenair Hermetic Connector Products Special Leak Rare Mod Code	F-4
	MIL-DTL-26500 Type Insert Arrangements and Keyway Positions	F-5
	MIL-DTL-26500 Type Materials and Finishes	F-6
	MIL-DTL-26500 Type Bayonet and Threaded Coupling and Electrical Service Data	F-7
230-036 MS27034H*B**	MIL-DTL-26500 Type Bayonet Coupling Solder Flange Mount Receptacle	F-8
230-038 MS27034H*T**	MIL-DTL-26500 Type Threaded Coupling Solder Flange Mount Receptacle	F-10
230-039	MIL-DTL-26500 Type Bayonet Coupling Single Hole Mount Receptacle	F-12
230-040	MIL-DTL-26500 Type Threaded Coupling Single Hole Mount Receptacle	F-14
230-041	MIL-DTL-26500 Type Bayonet Coupling Square Flange Mount Receptacle	F-16
237-165	MIL-DTL-26500 Type Threaded Coupling Square Flange Mount Receptacle	F-18
MIL-DTL-5015 Type Hermetic Power and Signal Connectors		
Part Number	Description	Page
	MIL-DTL-5015 Type Insert Arrangements	G-2
	MIL-DTL-5015 Type Alternate Key Positions	G-5

© 2013 Glenair, Inc.

Hermetic Connectors Product Index

250-013	Threaded Coupling Square Flange Receptacle MS3142 Type	G-6
250-014	Threaded Coupling Solder Mount Receptacle MS3143 Type	G-8
250-015	Threaded Coupling Box Mount Receptacle Connector MS3142 Type	G-10
250-016	Threaded Coupling Solder Mount Receptacle Connector MS3143 Type Sockets	G-12
250-025	Threaded Coupling Flangeless Mount Receptacle Connector MS3143 Type	G-14
257-384	Jam Nut Mount Receptacle Connector MS3404 Type	G-16
947-042	Jam Nut Mount Bulkhead Feed-Thru Connector with Pin/Socket Contacts	G-18
947-056	Jam Nut Mount Bulkhead Feed-Thru Connector with Pin/Pin Contacts	G-20
947-259	Panel Mount Bulkhead Feed-Thru Receptacle	G-22
947-371	Jam Nut Mount Bulkhead Feed-Thru Receptacle	G-24
Series 22 Geo-Marine® High Density Severe Environment Hermetic Connectors		
Part Number	Description	Page
	Series 22 Geo-Marine® Product Information	H-2
	Glenair Hermetic Connector Products Special Leak rate Mod Code	H-3
	Geo-Marine® Insert Arrangements	H-4
	Geo-Marine® Alternate Keyway Positions, Materials and Finishes	H-5
220-00 and 220-10	Front Mounted Jam-Nut Bulkhead Connector Receptacle	H-6
220-01 and 220-11	In-Line Connector Receptacle Assembly	H-8
220-02 and 220-12	Square Flange Mount Connector Receptacle Assembly	H-10
220-03 and 220-13	Solder Mount Bulkhead Connector Receptacle Assembly	H-12
220-04 and 220-14	Rear Mounted Jam Nut Wall Mount Connector Receptacle Assembly	H-14
220-07 and 220-17	Rear Mounted Jam Nut Box Mount Receptacle Assembly	H-16
227-092	Special Scoop-Proof Jam Nut Receptacle, Sizes -10, -12 and -14	H-18
MIL-DTL-24308 D-Subminiature Hermetic Connectors		
Part Number	Description	Page
	MIL-DTL-24308 Type Hermetic Connector Solder Mount Information	J-2
	Glenair Hermetic Connector Products Space Grade Mod Codes	J-3
	Glenair Hermetic Connector Products Special Leak Rate Mod Codes	J-4
	MIL-DTL-24308 Type Hermetic Connector Materials, Finishes and Specifications	J-5
	MIL-DTL-24308 Type Hermetic Connector Insert Arrangements and Panel Cut-Outs	J-6
	MIL-DTL-24308 Type Hermetic Connector Style A and Style B Dimensions	J-7
280-003	Glass Sealed D-Subminiature Receptacle	J-8
280-006	Glass Sealed D-Subminiature Receptacle	J-10
280-009	Pin-To-Pin D-Subminiature Feedthrough	J-12
280-012	Rear PCB Termination Glass Sealed D-Subminiature Connector	J-14
280-013	O-Ring Panel Sealing High Density D-Subminiature Connector	J-16
280-014	O-Ring Panel Sealing D-Subminiature Connector	J-18
287-018	Glass-Sealed D-Subminiature Connector with Front Mount O-Ring Seal	J-20
287-035	High Density Glass-Sealed D-Subminiature Connector	J-22
MIL-DTL-83513 Type Micro-D Hermetic Connectors		
Part Number	Description	Page
	MIL-DTL-83513 Type Micro-D Hermetic Connector Introduction	K-2
	Glenair Hermetic Connector Products Special Leak rate Mod Code	K-3
	MIL-DTL-83513 Type Micro-D Connectors General Information	K-4
	MIL-DTL-83513 Type Micro-D Design Notes and Contact Arrangements	K-5
	MIL-DTL-83513 Type Micro-D Materials and Finishes and Performance Specifications	K-6
177-140H and 177-704H	Solder Mount Micro-D Hermetic Connector	K-7
177-705H and 177-706H	Rear Panel Mount with O-Ring Micro-D Hermetic Connector	K-9

© 2013 Glenair, Inc.

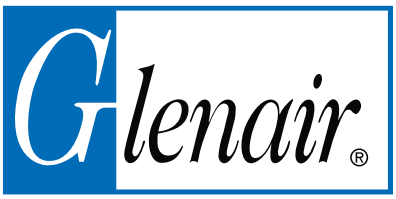

177-232	Front Mount Socket Shell Micro-D Hermetic Connector, Size 37	K-12
177-859	Front Mount Socket Shell Micro-D Hermetic Connector, Sizes 9 to 21	K-14
Series 79 Micro-Crimp Hermetic Connectors		
Part Number	Description	Page
	Series 79 Micro-Crimp Hermetic Connectors General Information	L-2
	Series 79 Micro-Crimp Recommended Panel Cutouts	L-3
	Series 79 Micro-Crimp Contact Arrangements	L-5
	Series 79 Micro-Crimp Connectors for Space Flight	L-8
790-066	Hermetic Rear Panel Mount Receptacle, Pin Face, Solder Cup Contacts	L-9
797-077	Hermetic Receptacle, E-11P2 Arrangement	L-14
797-087	Hermetic Receptacle, Pin Contacts with P.C. Tails, Size H-66 Only	L-15
797-204	Hermetic Receptacle, Pre-Wired Pin Contacts, Shell Size G-33	L-17
797-216	Rectangular Hemetic Receptacle Connector 9 X Coax Contacts	L-19
Series 970 PowerTrip™ Hermetic Connectors		
Part Number	Description	Page
	Series 970 PowerTrip™ Hermetic Connectors Introduction	M-2
	Glenair Hermetic Connector Products Special Leak Rate Mod Codes	M-5
970-007	Jam Nut Mount PowerTrip™ Bulkhead Feedthrough Receptacle How to Order Information	M-6
970-012	Square Flange Mount PowerTrip™ Bulkhead Feedthrough Receptacle How to Order Information	M-8

Special Hermetic Connectors		
Part Number	Description	Page
237-263	Special Micro Circular Quick Disconnect Receptacle, Rear Panel Jam Nut Mount	N-2
2570-1290	Special Micro Circular Quick Disconnect Receptacle, Single-Pin Feedthrough	N-4

© 2013 Glenair, Inc.

Glenair®

Out of This World

INTERCONNECT SOLUTIONS

Glenair, Inc.
1211 Air Way • Glendale, California • 91201-2497
Telephone: 818-247-6000 • Fax: 818-500-9912 • sales@glenair.com
www.glenair.com

Glenair Power Products Group
860 N. Main Street Extension
Wallingford, CT
06492
Telephone: 203-741-1115
Facsimile: 203-741-0053
sales@glenair.com

Glenair UK Ltd
40 Lower Oakham Way
Oakham Business Park
P.O. Box 37, Mansfield
Notts, NG18 5BY England
Telephone: +44-1623-638100
Facsimile: +44-1623-638111
sales@glenair.co.uk

Glenair Microway Systems
7000 North Lawndale Avenue
Lincolnwood, IL
60712
Telephone: 847-679-8833
Facsimile: 847-679-8849

Glenair Nordic AB
Gustav III : S Boulevard 46
S - 169 27 Solna
Sweden
Telephone: +46-8-50550000
Facsimile: +46-8-50550001
sales@glenair.se

Glenair Electric GmbH
Schaberweg 28
D. 61348 Bad Homburg
Germany
Telephone: 06172 / 68 16 0
Facsimile: 06172 / 68 16 90
germany@glenair.com

Glenair Iberica
C/ La Vega, 16
45612 Velada
Spain
Telephone: +34-925-89-29-88
Facsimile: +34-925-89-29-87
sales@glenair.es

Glenair Italia S.p.A.
Via Del Lavoro, 7
40057 Quarto Inferiore –
Granarolo dell'Emilia
Bologna, Italy
Telephone: +39-051-782811
Facsimile: +39-051-782259
info@glenair.it

Glenair France SARL
7, Avenue Parmentier
Immeuble Central Parc #2
31200 Toulouse
France
Telephone: +33-5-34-40-97-40
Facsimile: +33-5-61-47-86-10
sales@glenair.fr

© 2013 Glenair, Inc.

Printed in U.S.A.